TUNNEL HUNT©

SERVICE MANUAL

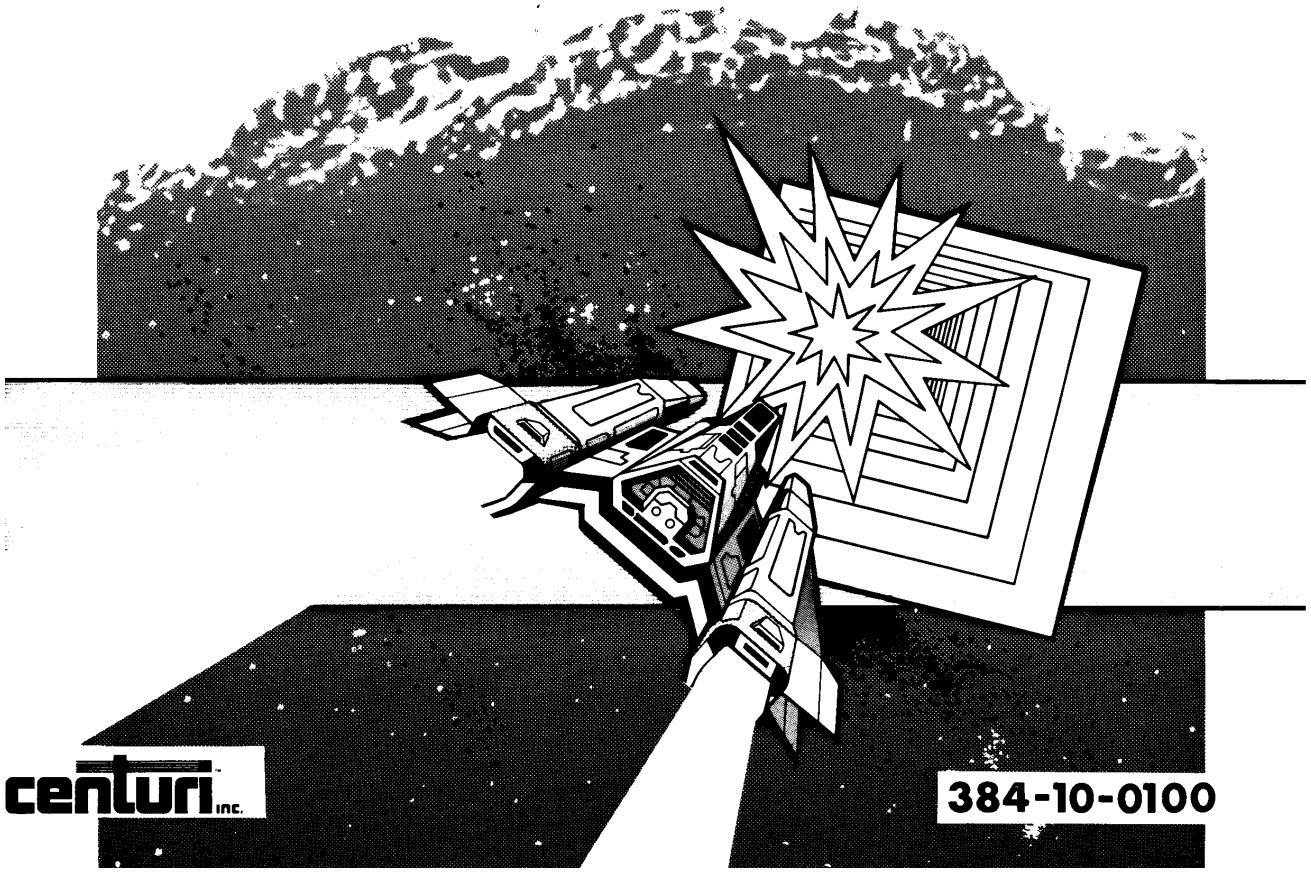

centuri inc.

384-10-0100

TUNNEL HUNT

CENTURI, INC.
245 W. 74TH PLACE
HIALEAH, FLA. 33014

CUSTOMER SERVICE:
TEL. #(305) 558-5200 (IN FLORIDA)
TEL. #(800) 327-7710 (OUTSIDE FLORIDA)

TELEX: 803694 ANSB CENTURI CABLE: CENTURI

"TUNNEL HUNT"

TABLE OF CONTENTS

I. INTRODUCTION: PAGE NO.

USER INFORMATION F.C.C.----------1
NOTES----------2
FRONT VIEW, TUNNEL HUNT, CABINET----------3
FRONT VIEW OF CABINET, PARTS LIST----------4
GAME PLAY----------5,6,7
ATTRACT MODE----------8

II. OPERATION:

SELF TEST----------9,10,11
CONTROLS----------12
GAME INSTRUCTIONS AND POINT SCORING----------13
OPTIONAL SWITCH SETTINGS----------14
INSTALLATION & ELECTRICAL REQUIREMENTS----------15
ROUTINE MAINTENANCE & SERVICE----------16

III. GAME PART DRAWINGS, PARTS LISTS & SCHEMATICS:

GIMBAL-TYPE JOYSTICK ASS'Y (UPPER)----------17
GIMBAL-TYPE JOYSTICK ASS'Y (UNDERSIDE)----------18
GIMBAL-TYPE JOYSTICK ASS'Y, PARTS LIST (# 50130094)----------19
FRONT PLATE EXPLODED VIEW----------20
FRONT PLATE EXPLODED VIEW, PARTS LIST----------21
COIN DOOR EXPLODED VIEW (MECHANICAL)----------22
COIN DOOR EXPLODED VIEW, PARTS LIST (MECHANICAL)----------23
COIN DOOR EXPLODED VIEW (HARDWARE)----------24
COIN DOOR EXPLODED VIEW, PARTS LIST (HARDWARE)----------25
COIN SWITCH AND BULB REPLACEMENT----------26
COIN SWITCH AND BULB REPLACEMENT, PARTS LIST----------27
REMOVING COIN MECHANISM----------28
POWER SUPPLY, TUNNEL HUNT----------29
EXPLODED VIEW OF POWER SUPPLY ASS'Y----------30
EXPLODED VIEW OF POWER SUPPLY ASS'Y, PARTS LIST (# 50350007)-----31
CONTROL PANEL----------32
COMPLETE GAME LESS/PKG. ASS'Y (384-01-0200)----------33
COMPLETE GAME LESS/PKG. ASS'Y, PARTS LIST (384-01-0200)----------34
CABINET REAR VIEW----------35

"TUNNEL HUNT"

TABLE OF CONTENTS

(CONT'D)

III. GAME PART DRAWINGS, PARTS LISTS & SCHEMATICS: PAGE NO.

C.P.U. BOARD ASS'Y, PARTS LIST (# 384-13-0200)---------36,37,38,39

REG/AUDIO P.C.B. ASS'Y, PARTS LIST (# 384-13-0100)----------40,41

WIRING DIAGRAM----------42

REGULATOR/AUDIO II P.C.B., SCHEMATIC (384-17-0200)----------43

P.C.B. TUNNEL HUNT, SCHEMATIC (384-17-0300) SHEET 1/8----------44

P.C.B. TUNNEL HUNT, SCHEMATIC (384-17-0300) SHEET 2/8----------45

P.C.B. TUNNEL HUNT, SCHEMATIC (384-17-0300) SHEET 3/8----------46

P.C.B. TUNNEL HUNT, SCHEMATIC (384-17-0300) SHEET 4/8----------47

P.C.B. TUNNEL HUNT, SCHEMATIC (384-17-0300) SHEET 5/8----------48

P.C.B. TUNNEL HUNT, SCHEMATIC (384-17-0300) SHEET 6/8----------49

P.C.B. TUNNEL HUNT, SCHEMATIC (384-17-0300) SHEET 7/8----------50

P.C.B. TUNNEL HUNT, SCHEMATIC (384-17-0300) SHEET 8/8----------51

USER INFORMATION - F.C.C.

WARNING

THIS EQUIPMENT GENERATES, USES, AND CAN RADIATE RADIO FREQUENCY ENERGY, AND IF NOT INSTALLED AND USED IN ACCORDANCE WITH THE INSTRUCTION MANUAL, MAY CAUSE INTERFERENCE TO RADIO COMMUNICATIONS. AS TEMPORARILY PERMITTED BY REGULATION, IT HAS NOT BEEN TESTED FOR COMPLIANCE PURSUANT TO SUBPART J OF PART 15 OF F.C.C. RULES, WHICH ARE DESIGNED TO PROVIDE REASONABLE PROTECTION AGAINST SUCH INTERFERENCE. OPERATION OF THIS EQUIPMENT IN A RESIDENTIAL AREA IS LIKELY TO CAUSE INTERFERENCE IN WHICH CASE, THE USER AT HIS OWN EXPENSE WILL BE REQUIRED TO TAKE WATEVER MEASURES MAY BE REQUIRED TO CORRECT THE INTERFERENCE.

INTRODUCTION

"TUNNEL HUNT" IS A MICROPROCESSOR BASED COIN-OPERATED ELECTRONIC GAME, THAT MAKES EXTENSIVE USE OF DIGITAL INTEGRATED CIRCUITRY AND TELEVISION MONITOR CONCEPTS. THIS MANUAL IS DESIGNED FOR THE USE OF MAINTENANCE TECHNICIANS WHO POSSESS A GENERAL WORKING KNOWLEDGE OF SOLID-STATE CIRCUITRY, AND VIDEO MONITOR THEORY. ANY INDIVIDUAL NOT KNOWLEDGEABLE IN THESE AREAS SHOULD NOT ATTEMPT REPAIR OF THE ELECTRONIC PORTIONS OF THE GAME.

IN ADDITION TO THIS MANUAL AND TRAINING IN ELECTRONICS, TROUBLE-SHOOTING AND REPAIR WILL BE FACILITATED BY ACCESS TO GENERAL-TYPE HANDTOOLS, A MULTIMETER, A 50 OR 100 MHZ OSCILLOSCOPE AND A LOGIC PROBE WOULD BE HELPFUL.

TECHNICAL ASSISTANCE IS AVAILABLE BY CALLING (305) 558-5200. QUESTIONS OR COMMENTS CONCERNING "TUNNEL HUNT" OR ANY OF OUR GAMES ARE WELCOME AND SHOULD BE DIRECTED TO:

CENTURI, INC.

CUSTOMER SERVICE DEPARTAMENT
#800-327-7710 (OUTSIDE THE STATE OF FLA.)
#305-556-5888 (IN FLORIDA)

NOTES

NEVER REPLACE ANY COMPONENTS WITH ANYTHING OTHER THAN EXACT REPLACEMENT PARTS.
NEVER REMOVE CIRCUIT BOARD CONNECTIONS WHILE POWER IS ON.
DO NOT REPLACE THE FUSE WITH ANYTHING OTHER THAN THE PROPER VALUE. A BLOWN FUSE INDICATES AN OVERLOAD CONDITION WITHIN THE GAME. REPLACING THE FUSE WITH A HIGHER VALUE CAN CAUSE SEVERE DAMAGE TO INTERNAL COMPONENTS IF AN OVERLOAD OCCURS.
ALWAYS CONSULT THE MANUAL BEFORE ATTEMPTING REPAIRS.

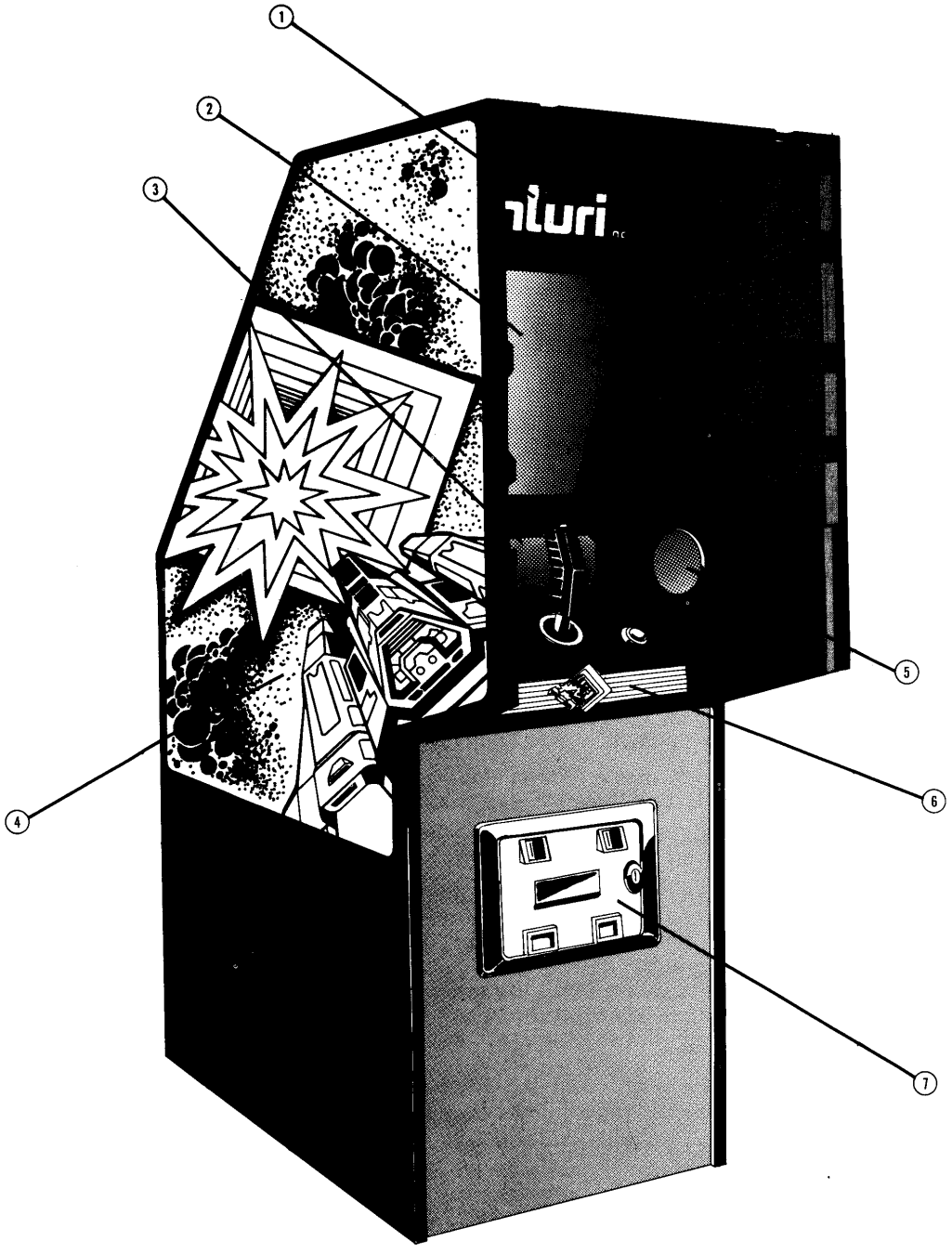

FRONT VIEW OF CABINET

"TUNNEL HUNT" CABINET FRONT VIEW
PARTS LIST

ITEM:	CENTURI P/N:	DESCRIPTION:
1.	384-06-0100	SILK SCREENED MARQUEE PANEL
2.	384-04-2200	VIEWING PANEL
3.	384-06-0200	SILK SCREENED INSTRUCTION PANEL
4.	384-06-0300 384-06-0400	LEFT SIDE DECAL RIGHT SIDE DECAL
5.	384-03-0300	SPEAKER GUARD SCREEN
6.	384-06-0500	CONTROL PANEL OVERLAY
7.	360-14-0700	COINCO COIN DOOR (MODIFIED)

"TUNNEL HUNT"

GAME PLAY

This Mode is entered when the Flashing Start Button is pushed. The Start LED will stay on, and all sounds will be activated. You will be placed "out in space" and the Tunnel will appear in front of you. The speed will be minimum. Ships will appear from either down the Tunnel or will fly "over head" and past you. Occasionally a ship from behind will shoot a shot past you just before it appears. However, you cannot be shot from behind.

A white cursor will appear in the center of the screen. By maneuvering down the Tunnel, the Ship can be made to align with this cursor. It may be shot down by firing the lasers while holding the Ship in this position. Lasers shots come from the lower left & right hand corners alternately on each push of the Fire Button and travel "down" the Tunnel.

If a Ship is hit (or shot), it will explode into pieces and an explosion sound will start. It's score value will display as described in the scoring section, and the SCORE Display will be updated. 1 hit will be added to the Hits display.

The Game is divided into a mumber of difficulty levels.

LEVEL 1. Up t 6 Hits: No ships shoot back. A delay appears between the start of Ships. Easy Tunnel to follow.

LEVEL 2. Up to 12 Hits: Ships randomly shoot back. The new Ship delay still exists. Tunnel still easy.

LEVEL 3. Up to 18 Hits: All ships shoot back. The new Ship delay still exists. Tunnel harder again.

LEVEL 4. Up to 24 Hits: Same as Level 3 but the Tunnel is much harder to follow.

LEVEL 5. Above 24 Hits: All Ships shoot back. As soon as one ship is shot, another appears with NO delay. Same Tunnel as Level 4.

Each time a Ship is hit, your speed increases a little. If you are shot or crash, your speed is reduced to half of what it was for the next life (or the minimum, whichever is greater).

NOTES ON ABOVE: -If a Ship's Shot is hit, the ship that shot it will immediatly reappear, regardless of the game level.

-If a Player avoids ships by hitting the side of the Tunnel and allowing them "to go out of range" continuously,ships will shoot back regardless of level.

LASER

The Laser has a limited amount of continuous fire. Each shot "heats up" the Laser; NOT shotting allows it to cool, but at a slower rate. The temp. of the Laser may be seen on the LASER TEMP: Display near the bottom of the screen. A moving bar show the temp. at any time.

As the Laser gets hotter, the bar grows more to the right. If you OVERHEAT the Laser, it will not shoot untill it cools 50%.

The Laser has 4 STATES:

SAFE: The bar display is green and the words "LASER TEMP" are displayed.

WARNING 1: The bar turns yellow and a continuous beep is heard. The word "WARNING" alternates with LASER TEMP.

WARNING 2: Same as Warning 1 but the beep increases in frequency.

OVERHEAT : The bar turns red. The word "OVERHEAT" alternates with LASER TEMP. The beep again increases in frequency. The Fire Button is disabled untill the laser cools.

SHIELDS

The Shields may be used to protect you from dying by either enemy shot or crashing. Shields are activated by pressing the shield Button, as long as shield energy exists. Each new life restores shield power to max.
Shield energy is "used up" slowly whenever the Shields are activated. A large amount is used if the Shields are hit by an enemy ship or shell. Shields are displayed as a grip pattern across the entire screen. Normally they are blue, and get darker as the energy is used up. If they are hit, they turn red, then back to blue.
Shield energy is displayed on a bar graph similar to the Laser Temp. display. As energy decrease, the bar shrinks to the left.

The Shields have 3 Energy STATES:

STATE 1. OK. The bar display is green and the words"SHIELD PWR" appear.

STATE 2. LOW. The bar turns yellow and the word "LOW" alternates with SHIELD PWR.

STATE 3. OUT. The bar flashes red/green and the word "OUT" alternates with SHIELD PWR. If the Shield Button is pressed during this state, a warning beep is heard.

HULL TEMP.

To reduce the amount of time a Player may drag along the wall to slow his speed, a HULL TEMP. feature has been added. As you drag on the wall, your HULL TEMP increases. If it ever reaches maximum (indicated by a marker on the graph display), you die. The current temp. is indicated by a bar graph at the bottom of the screen. As the temp. increase, the bar grows left to right.

There are 3 HULL STATES:

STATE 1. OK. The bar graph display is green and the words "HULL TEMP." are displayed.

STATE 2. CRITICAL. The bar graph display flashes RED/GREEN. The word "WARNING" alternates with HULL TEMP and a beep warning sounds.

STATE 3. DEATH. If the graph reaches the max. mark, you die.

HIGH SCORE TABLE - END GAME

If a Player's score is one of the 5 best since power-up, he may enter

his initials into the table.
When the Game ends, his score is cheched to see if it qualifies.
If not, the Game goes directly to PHASE 2 of Attract. If it does qualify, then the Game enter initial entry mode.
The message "GREAT SCORE/ENTER YOUR INITIALS" appears and a letter in a white box. By moving the control left & right, the letter in the box will sequence up & down through the alphabet. Pressing SHIELD will enter the initial, indicated by the box about the letter turning orange. Another letter in a white box appears next to the last. 3 letters may be entered this way.
At the entry of the 3rd letter or after approx. 2 minutes of NO letter entry, the Game will return to PHASE 2 of Attract.

NOTE: If credit exists in the Game, and START BUTTON is pressed, ANY selected letters will be entered into the table and ANY unselected ones will be blanked. The Game will go directly to GAME PLAY. Thus, one may abort the initial entry completly if they wish.

Manufactured Under License from ATARI, INC.

ATTRACT MODE

There are 2 Phases of Attract Mode:

1. Phase 1 is similar to Game Play. A straight only Tunnel is traveled and Ships continue to fly at you. Some may shoot. The Lasers will fire automatically and hit all Ships that come down the Tunnel. This Phase lasts 30 seconds.

   MESSAGES:

   a) SCORE Message in lower right corner.
   b) BONUS for xxxx will display in lower center of the screen where xxxx = 30, 60, or 90,000.If Bonus is selected else no message will display.
   c) COIN? PLAY(s)? or FREE PLAY displays near the bottom of the screen.
   d) HITS with the number of hits from the last game will display at the bottom of the screen.
   e) © ATARI displays above the score.

   Some messages are determined by the CREDIT STATE of the machine in Attract Mode:

   Ø CREDITS:

   a) LIVES with the # of lives per Game display in the lower left corner.
   b) GAME OVER flashes lower center of the screen .

   1/2 CREDIT:

   a) CREDIT with 1/2 displays where LIVES used to be and the color changes from blue to orange.
   b) INSERT COIN flashed where GAME OVER was and a beep sound starts.

   1 CREDIT or more:

   a) CREDIT with credit amount under displays in the LIVES location. Color is orange.
   b) PUSH START flashes in the GAME OVER location.

2. The Second Phase is the high score table and title display. At power up, the hight score table will be initialized to various initials and scores from 5000 down to 1000.
   The name "TUNNEL HUNT" will appear onto the screen in large letters and pulsating colors. Phase 2 is approx. 30 seconds.
   Under the name will be a table of the top 5 scores since last reset or power up.

   MESSAGES:

   a) SCORE - same as PHASE 1
   b) © ATARI - same as PHASE 1
   c) CREDIT/LIVES - same as PHASE 1
   d) GAME OVER/INSERT COIN/PUSH START - same as PHASE 1
   e) ALL other Phase 1 Messages do not show.

SELF TEST

Self Test is entered by switching the Self-Test switch on the Coin Door. All memory is cleared & the high score table will be RE INITIALIZED.

Step I. RAM TEST

1. The Games 2 testable 2114's are tested. ANY Ram error will abort the test, thus if the first Ram Tests bad, an error in the second Ram will not show.
2. If the test passes, RAM OK is displayed on screen.
3. If a beep is heard (NOT a steady tone), a Ram error occured in the chip at F4.
4. If 2 beeps are heard, then the chip at E4 is bad. If this chip is bad, the chip at F4 will not be tested. The 2 beeps will be one high freq., one low.

NOTES:
1. This Test assumes POKEY sounds to be working.
2. If the RAM test fails ALL other tests are invalid.
3. If the RAM test fails, all screen info. is invalid.

Step II. ROM TEST (PROM TEST)

This Test will check the program memory in 2K intervals:

1. If all ROM/PROM's verify OK, the words ROM OK will appear on the screen next to the words RAM OK.
2. If one or more bad ROM/PROM's are detected, the word ROM followed by ONE or more letters will appear on the screen.

The following table show which chip the error occured:

LETTER	IC #	ADDRESS	NOTES
A	L/M 1	5000-57FF	-
B	K 1	5800-5FFF	1
C	J 1	6000-67FF	2
D	H/F 1	6800-6FFF	1
E	F/E 1	7000-77FF	3
F	D 1	7800-7FFF	1

NOTES:
1. This chip must be good to complete tests.
2. The tests will run with this chip bad. However, messages "ROM" & "RAM OK" may not appear correctly or may not appear at all.
3. If this chip is bad, the test is valid only through Step 3 and may not continue.

Step III. COLOR BARS, CHARACTER PROM, TONE TEST

1. After the ROM test completes, a set of color Bars will display. Just bellow this will be a 2 line DISPLAY of characters. The Characters will be "HILIGHTED" by bands of color.
   A Tone will come on and will continue to sound until any switch is pressed.

2. The Color Bars test, the Color Ram and the Square Generator circuit. There should be 7 evenly spaced Bars starting from the top of the screen down to the top of the Character Display lines (about 80% of the screen). They should extend from the left edge of the screen approx. 80% across to the right. To the right of these are 3 more squares in the upper right hand corner. Below these should be a black band.
The colors are as follows:

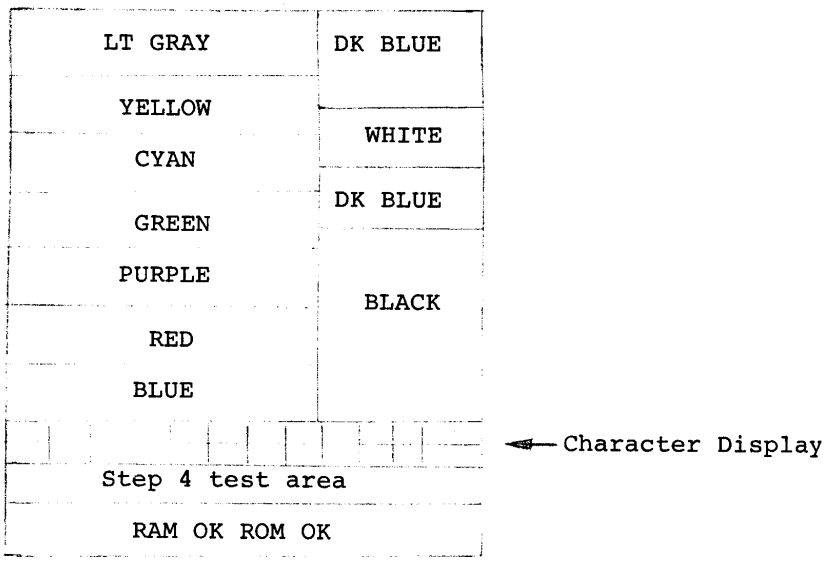

FIG. 1

3. The Character display test allows checking of the contents of ALPHA/NUMERIC Prom and the Character "HILIGHT". The color behind the characters will vary depending on what state the game was in when self test was entered.

ENTRY TIME	COLORS (left to right)
Phase 1 Attract	Black,Green,Yellow,Blue
Phase 2 Attract	Black,Green,Yellow,Green
Entering Initials	Black,Green,Yellow,Orange
Game Play	Black,Green,Yellow,Green
Game Play,Hull,Warning ON	Black,Green,Yellow,Red
Power Up	Black,Green,Yellow,Black

NOTES: 1. The last color in each list will also be the hilight color of the ROM OK, RAM OK messages.

2. The Tone Test simply show that the sound output circuit was working. This Tone may be stopped by press any button.

Step IV. SWITCH TEST, POT TEST, COIN-OPTION DISPLAY
(This Step runs simultaneously with Step 3)

1. The switch test allows each control switch & coin switch to be tested. (If any ONE Switch is "stuck", the tone of Step 3 will not be heard). By pressing and releasing each switch, a beep is heard each time a transition takes place. If no beep is heard, the switch or its associated circuity is faulty.

2. The Pots on the joystick may now be checked by moving the control and observing the screen. Two pairs of numbers appear just right of center in the band marked Step 4 Test area in Fig. 1. The pair to the left should change when the control is moved left/right. The other should change when the control is moved up/down.

3. Although the right most digit of each pair makes little sense, it should change rapidly when the control is moved. It is also normal for this Digit to "flutter" when no motion is made. The left hand digit should change through at least 4 values as the control is moved from one extreme to the other.

4. If these numbers do NOT change as described, or no Tones are heard, change the 40 Pin chip at location D 3/4.

5. The Option Switch bank located at B4 is displayed as a Group of 1's and 0's. This is the Coin Option Switch Bank. Switch 1 is displayed to the right through switch 8 to the left. This test checks the chip located at 4B 3/4 (40 pin). If changing the state of one of the switches at B4 cause no change with it's corresponding 1 or 0 on the screen, change this chip.

ADDITIONAL FEATURES:

To allow set-up of the color Monitor, 3 Additional STEPS are accessible. To enter the next Step and each Step thereafter, press BOTH START and SHIELD, then release.

STEP A1 through A3:

-Color purity screens. A total color screen will display to allow cheching and correction of color purity. Step A1 is all RED, A2 is all GREEN, and A3 is all BLUE.

STEP A4:

-A cross hatch pattern is displayed to check and aid in convergence of the color Monitor.

-Pressing START and SHIELD again will return you to STEP 1 of SELF-TEST.

-Return to PHASE 1 Attract may be accomplished at ANY time from Any test by switching off the SELF-TEST Switch.

CONTROLS

1. Left/Right, Up/Down Joystick (2 pots)
2. Fire Button (Switch)
3. Shield Button (Switch w/lamp)
4. Start Button
5. Self test Switch
6. Coin Switches (2 switches)

MONITOR

19" Color Monitor

SOUNDS

All sounds are generated by 2 POKEYS:

Pokey 1

a) Shot Sound
b) Explosion Sound
c) Scrape wall Sound

Pokey 2

a) Hull Temp. warning Beep
b) Shields out warning Beep
c) Laser warning Beeps (3 stages)
d) Bonus Life award Beep
e) Flight "Hum"
f) Self Test Tones

GAME INSTRUCTIONS

1. Insert Coin(s). Push Start Button.
2. Use Joystick to maneuver down tunnel.
3. Acceleration is automatic. Hitting walls slows you down.
4. Shoot down enemy craft and shells to avoid being hit (avoid overheating lasers).
5. Use shields to prevent being hit. (There is a limited amount of shield power per life).
6. Points are based on size of enemy and your speed (times color bonus multiplier). Smaller ships at high speed are worth more.

GAME POINT SCORING

The score of a hit Ship or Shell is based on 3 factors:

1. Your speed down the Tube.
2. The distance (size) of the enemy ship or shot.
3. How long you "have been alive" this life (know as the color Bonus Multiplier).

The length of life is indicated by the color of the Enemy Ship. If a shot is hit, it takes the multiplier of the last color ship seen.

When a Ship or Shell is hit, the message VALUE: XXXX will display on the top of the Status Indicator for approx. 4 seconds.

COLOR MULTIPLIER

COLOR	cyan	blue	green	yellow	white	black
MULTIPLIER	1	2	3	4	5	6

If a Bonus Option is selected and the Bonus Score (or 100K) is reached, 3 Beeps will be heard and the word "BONUS" will appear under the LIVES display for 4 seconds.

OPTIONAL SWITCH SETTING

The following Switches for the Game "TUNNEL HUNT" are found on the C.P.U. BOARD. The settings below are a guide in selecting optional game format.

BANK 1 (B3)

	1	2	3	4	5	6	7	8	NORM.	
# OF STARTING LIVES				Off	Off					2 Lives
				Off	On				*	3 Lives
				On	Off					4 Lives
				On	On					5 Lives
BONUS LEVEL	Off	Off								No Bonus
	Off	On								Bonus c 30K&100K
	On	Off							*	Bonus c 60K&100K
	On	On								Bonus c 90K&100K
NOT USED						NOT USED				SW. 6,7,8, not used
FOREIGN LANGUAGE**			Off	(SW. 8, Bank 2 Off)					*	ENGLISH
			Off	(SW. 8, Bank 2 On)						GERMAN
			On	(SW. 8, Bank 2 Off)						FRENCH
			On	(SW. 8, Bank 2 On)						SPANISH

BANK 2 (B4)

	1	2	3	4	5	6	7	8	
FOREIGN LANGUAGE**								x	(see above)
COIN MODES	Off	Off							Free Play
	Off	On							* 1 Coin, 1 Play
	On	Off							1 Coin, 2 Plays
	On	On							2 Coins, 2 Plays
RIGHT-MECH MULTIPLIER			Off	Off					* Mech has value 1
			Off	On					Mech has value 5
			On	Off					Mech has value 4
			On	On					Mech has value 6
LEFT-MECH MULTIPLIER					Off				* Mech has value 1
					On				Mech has value 2
BONUS ADDER						Off	Off		* No Bonus Coins
						Off	On		4 Coins gives 1 extra
						On	Off		2 Coins gives 1 extra
						On	On		5 Coins gives 2 extra

**SWITCH 3, BANK 1 and SWITCH 8, Bank 2 work together.

*NORMAL SETTINGS

INSTALLATION

Your game was shipped from the factory in ready-to-play condition. A brief inspection is suggested before the machine is removed from the carton. If there is damage to the shipping carton, contact the freight carrier for claim purposes. External damage could indicate possible damage to the cabinet and/or electronics components.

After the carton has been satisfactorily inspected, remove the machine from the shipping carton.

Examine the interior of the game for disconnected wires, cables, or harnesses. Make sure the electronic devices are securely mounted in their sockets, etc. Record the game serial number, since it will be required for reference and servicing.

ELECTRICAL REQUIREMENTS

Unless otherwise specified, this game is set to operate at 110 Volts A.C.

Power supply chasis schematic information and parts list are included in this manual.

ROUTINE MAINTENANCE & SERVICE

Beacause of the solid state electronic circuitry, this machine should require very little maintenance, and only occassional adjustments. However, it is necessary to take steps to insure this.

The volume control is located on the front side of the cabinet and is accessible trough the coin door.

The video monitor has been properly adjusted before shipping. Occassionally minor adjustments are necessary. Technical information, along with schematics, can be found in this manual. Adjustment controls for the monitor are located on the rear of the monitor.

"DO NOT MAKE ANY ADJUSTMENTS ON THIS MACHINE WHILE THE POWER IS ON"! This machine should only be adjusted by a "qualified" technician.

For Service Information, contact:

CENTURI, INC.

CUSTOMER SERVICE DEPARTAMENT
#800-327-7710 (Outside the State of Fla.)
#305-556-5888 (In Florida)

POWER SUPPLY

The Computer Board in this game operates most efficiently and reliably when the power supply is set so the voltage on the Board is 5.0 Volts, $\pm$0.1 Volts. To check this, place a meter across 5 Volts, and ground, at the edge connector. If necessary, adjust the screwdriver control on the power supply, so the meter reads between 4.9 and 5.1 Volts.

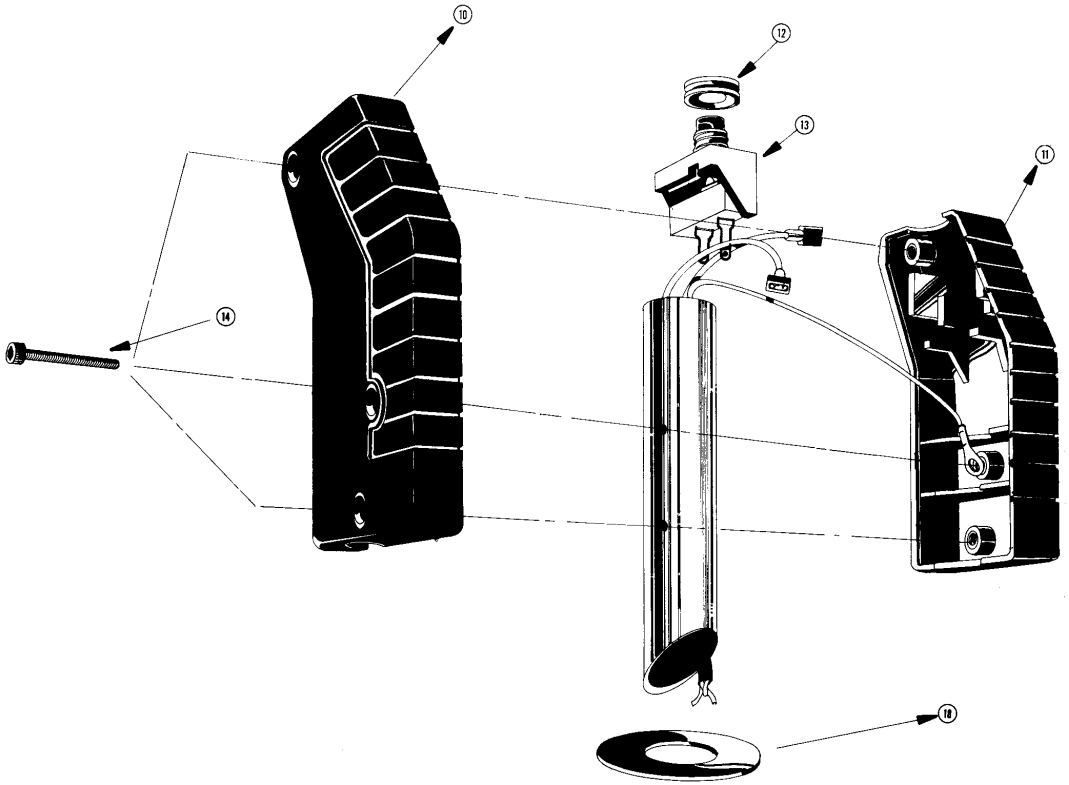

UPPER JOYSTICK ASS'Y.

THE MATERIAL CONTAINED HEREIN IS CONFIDENTIAL AND NO PART OF IT CAN BE REPRODUCED WITHOUT THE EXPRESSED PERMISSION OF CENTURI, INC.

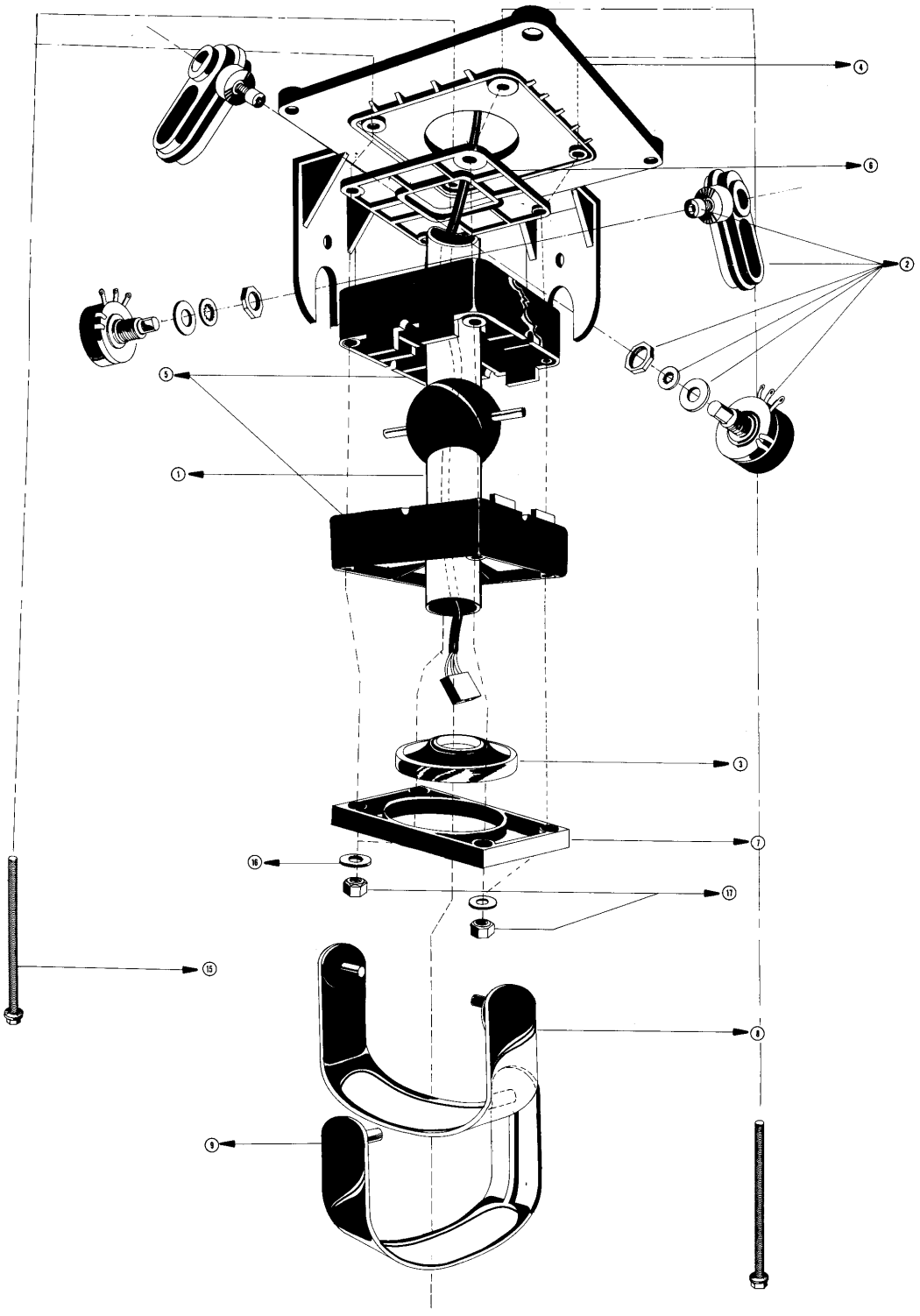

JOY STICK(UNDERSIDE)ASS'Y.

GIMBAL-TYPE JOYSTICK ASS'Y
PARTS LIST

ITEM:	CENTURI P/N:	DESCRIPTION:	QTY:
1.	50130096	ASS'y PIVOT-SHAFT & HARNESS	1
2.	50130108	ASS'y, POT & LINKAGE	2
3.	50130098	ASSEMBLY, BELLOW, CENTERING	1
4.	50130107	PLATE, MOUNTING	1
5.	50130097	HOUSING, PIVOT BALL	2
6.	50130095	PLATE, CONTROL PATTERN-SQUARE	1
7.	50130099	CAP, BELLOW	1
8.	50130100	GIMBAL, INNER	1
9.	50130101	GIMBAL, OUTER	1
10.	50130104	HANDLE, CONTROL RIGHT	1
11.	50130105	HANDLE CONTROL, LEFT	1
12.	50130102	BEZEL, HANDLE	1
13.	50130103	SWITCH, CHERRY #P163-AWAA	1
14.	10080039	SCREW, MACH, CAP, HEX SOCKET HD, #6-32 x 7/8" LG, STL	3
15.	10120039	MACH SCREW, HEX HEAD, #10 - 32x2$\frac{1}{2}$" LG, STL ZINC PLT.	4
16.	10190009	WASHER, PLAIN, FLAT, #10, STL, ZINC PLT.	4
17.	10140005	NUT, HEX, SELF-LOCKING, POLYMER, STL #10-32	4
18.	50130106	PLATE, SLIDE	1

2800-0 FRONT PLATE EXPLODED VIEW

25¢ COIN

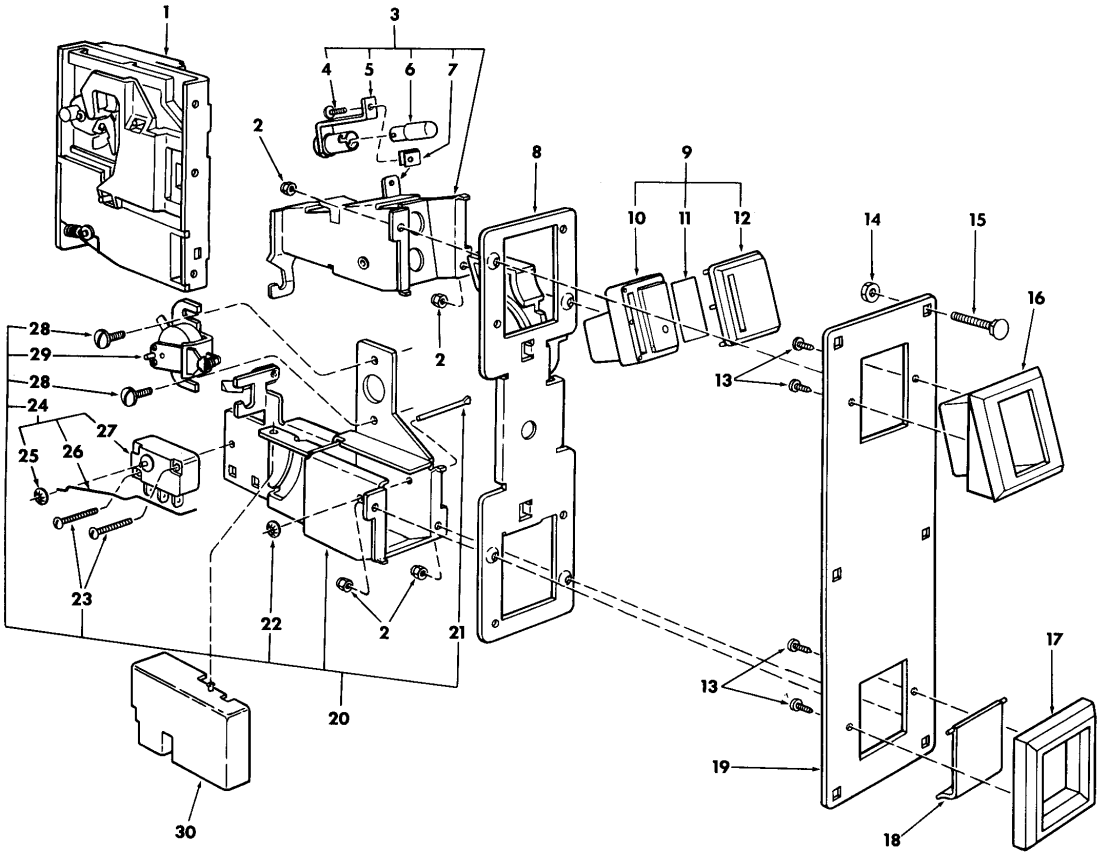

Index No.	Part No.	Description
1	5301-10	25¢ Coin Acceptor
2	400-4	#4-40 Self Locking Nut
3	404351	Coin Inlet Chute Assembly
4	110-4-6	4 x 3/8 Screw
5	904717	Lamp Socket
6	904716	#47 Lamp (6.3 Volt)
7	904712	Fastener
8	404464	Inner Panel/Lever Assembly
9	404348	Coin Return Button Assembly
10	904591	Coin Return Button
11	904703	25¢ Price Decal
12	904589-2	Reject Cover Button (25¢)
13	345-4-5	#4 x 5/16 Pan Head Screw
14	406-10	#10-24 Hex Nut (Mounting Hardware)
15	905022	#10-24 x 1-1/8 Carriage Bolt (Mounting Hardware)

Index No.	Part No.	Description
16	904588	Coin Inlet Housing
17	904590	Coin Return Cover
18	904599	Coin Return Door
19	404463	Frontplate Assembly, 3-1/8" x 9-1/4"
20	404350	Coin Return Chute Assembly
21	905115	Bar
22	904936	Keeper
23	100-4-12	4-40 x 3/4 Screw
24	404353	Switch & Wire Assembly
25	900651	Retainer
26	904710-1	Switch Wire-Silver
27	904845	Switch
28	100-6-3	6-32 x 3/16 Screw
29	404354	12 Volt Crem Assembly
30	904762	Switch Cover

2800-0 FRONT PLATE EXPLODED VIEW

(FIGURE 5)

PARTS LIST

NO.	CENTURI P/N:	MANUFACTURING P/N:	DESCRIPTION:
1.	50270144	5031-10	25¢ COIN ACCEPTOR
5.	50270169	904717	LAMP SOCKET
6.	50270170	904716	#47 LAMP(6.3 VOLT)
8.	50270172	404464	INNER PANEL/LEVER ASS'Y.
10.	50270145	904591	COIN RETURN BUTTON
11.	50270146	904703	25¢ PRICE DECAL
12.	50270147	904589-2	REJECT COVER BUTTON(25¢)
16.	50270149	904588	COIN INLET HOUSING
17.	50270157	904590	COIN RETURN BEZEL
18.	50270150	904599	COIN RETURN DOOR
19.	50270173	404463	FRONTPLATE ASS'Y.($3\frac{1}{8}$"x9¼")
21.	50270168	905115	BAR
25.	50270141	900651	RETAINER
26.	50270142	904710-1	SWITCH-WIRE, SILVER
27.	50130061	904845	SWITCH
29.	50270165	404354	12 VOLT C.R.E.M. ASS'Y.
30.	50270164	904762	SWITCH COVER

2800 SERIES COIN DOOR EXPLODED VIEW

25¢ U.S. COIN

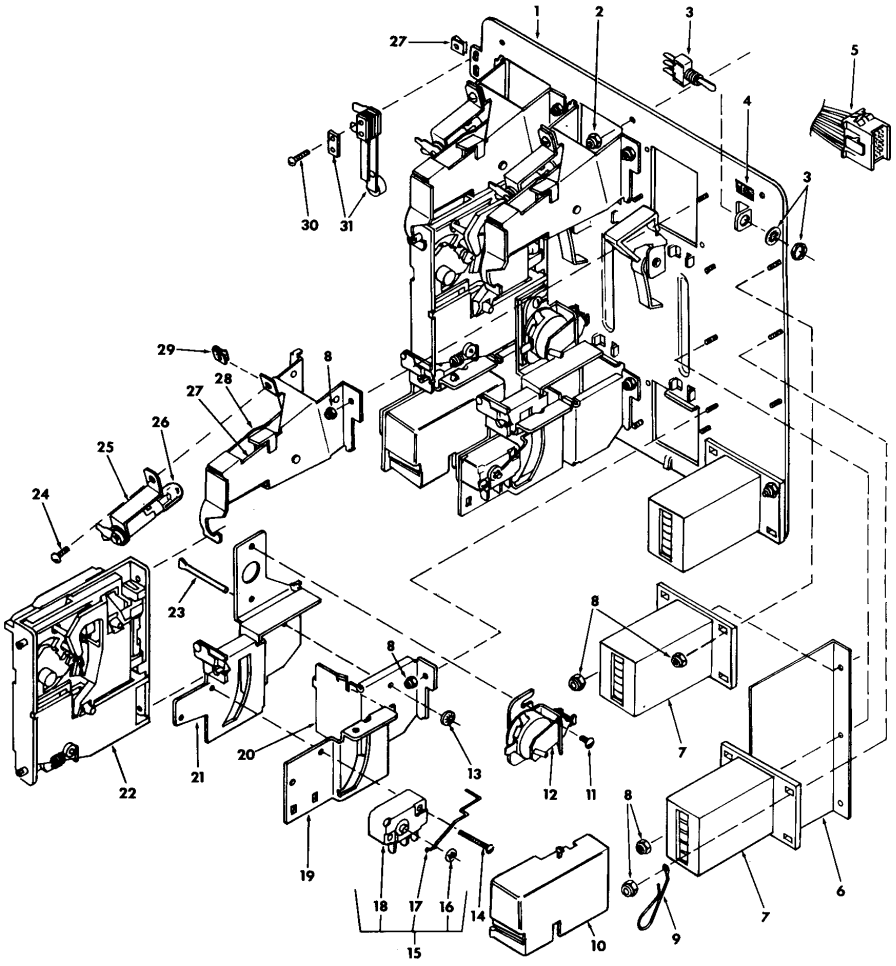

Index No.	Part No.	Description
1	404429	Inner Panel With Levers Sub-Assembly
2	400-8	Nut
3	904782	Toggle Switch
4	904706	Test Switch Decal
5		Custom Harness Assembly
6	904822	Insulation
7	404352	Coin Counter Assembly (6 Volt D.C.)
8	400-4	Nut
9	904722	Wire Key Holder
10	904762	Switch Cover
11	100-6-3	Screw
12	404354	C.R.E.M. Coil Assembly. 12 Volts D.C.
13	904936	Keeper
14	100-4-12	Screw
15	404353	Coin Switch Assembly for U.S. 25¢ Coin
16	900651	Retainer
17	904710-1	Silver Switch Wire — for U.S. 25¢ Coin
18	904845	Switch
19	904701	Coin Chute
20	904598	Coin Return Box
21	404428	Switch and C.R.E.M. Coil Bracket Assembly
22	5301-10	25¢ Acceptor
23	905115	Bar
24	110-4-6	Screw
25	904717	Miniature Bayonet-Base Lamp Socket
26	904716	#47 Lamp (6.3 Volt)
27	404418	Coin Inlet Chute Sub-Assembly
28	904594	Right Half of Coin Inlet Chute
29	904712	"U"-Type Fastener
30	116-4-8	Screw
31	904704	Slam Switch Assembly

2800 SERIES COIN DOOR EXPLODED VIEW

25¢ U.S. COIN

(FIGURE 6)

PARTS LIST

NO.	CENTURI P/N:	MANUFACTURING P/N:	DESCRIPTION:
1.	50270160	404429	INNER PANEL w/LEVERS SUBASS'Y.
3.	50130062	904782	TOGGLE SWITCH
4.	50270161	904706	TEST SWITCH DECAL
5.	364-62-1000A	-------	CUSTOM HARNESS ASS'Y.
6.	50270162	904822	INSULATION
7.	50270140	404352	COIN COUNTER ASS'Y.
9.	50270163	904722	WIRE KEY HOLDER
10.	50270164	904762	SWITCH COVER
12.	50270165	404354	C.R.E.M. COIL ASS'Y. (12 VOLT D.C.)
17.	50270142	904710-1	SILVER SWITCH WIRE- FOR 25¢ U.S. COIN
18.	50130061	904845	SWITCH
19.	50270143	904701	COIN CHUTE
20.	50270166	904598	COIN RETURN BOX
21.	50270167	404428	SWITCH & C.R.E.M. COIL BRACKET ASS'Y.
22.	50270144	5301-10	25¢ ACCEPTOR
23.	50270168	905115	BAR
25.	50270169	904717	MINIATURE BAYONET-BASE LAMP SOCKET
26.	50270170	904716	#47 LAMP(6.3 VOLTS)
27.	50270171	404418	COIN INLET CHUTE-SUBASS'Y.
31.	50130063	904707	SLAM SWITCH ASSEMBLY

2800 SERIES COIN DOOR EXPLODED VIEW

25¢ U.S. COIN

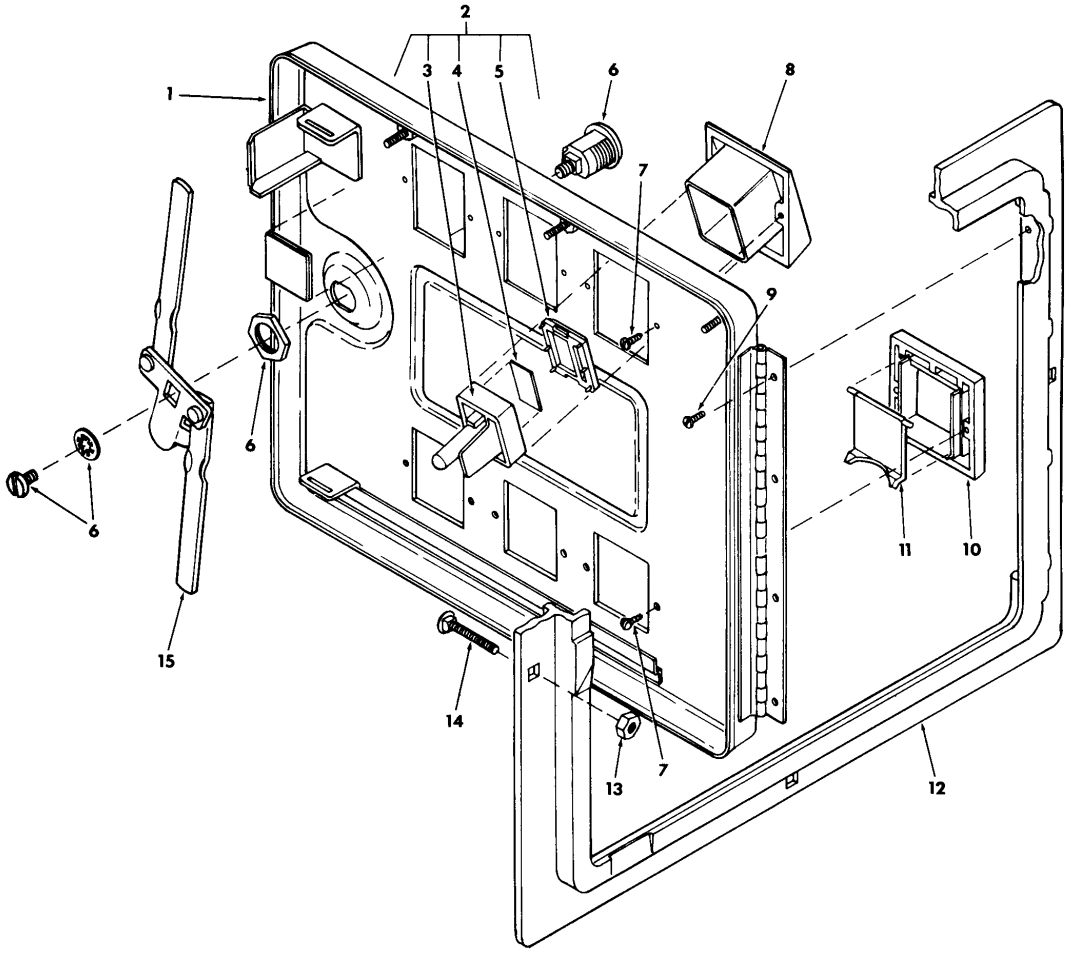

Index No.	Part No.	Description
1	404341	Coin Door Only (2 Coin)
	404341-1	Coin Door Only (3 Coin)
2	404348-1	Coin Return Button Assembly for U.S. 25¢ Coin
3	904591	Coin Return Button
4	904703	U.S. 25¢ Price Decal
5	904589-2	Coin Return Button Cover for U.S. 25¢ Coin
6	904707-1	Lock Assembly
7	345-4-5	Screw
8	904588	Coin Button Housing
9	325-4-4	Screw
10	904590	Coin Return Bezel
11	904599	Coin Return Cover
12	904581	Coin Door Frame, 11-5/8" x 13-3/8" Mounts in a 10-3/8" x 12-3/16" Opening
13	406-416	Hex Nut
14	904734	Carriage Bolt
15	404357	Locking Arm Assembly

2800 SERIES COIN DOOR EXPLODED VIEW

25¢ U.S. COIN

(FIGURE 7)

PARTS LIST

NO.	CENTURI P/N:	MANUFACTURING P/N:	DESCRIPTION:
1.	50270152	404341	COIN DOOR ONLY(2 COIN)
2.	50270158	404348-1	COIN DOOR BUTTON ASS'Y. FOR U.S. 25¢ COIN
3.	50270145	904591	COIN RETURN BUTTON
4.	50270146	904703	U.S. 25¢ PRICE DECAL
5.	50270147	904589-2	COIN RETURN BUTTON COVER
6.	50270148	904707-1	LOCK ASSEMBLY w/KEYS
8.	50270149	904588	COIN BUTTON HOUSING (INLET HOUSING)
10.	50270157	904590	COIN RETURN BEZEL
11.	50270150	904599	COIN RETURN COVER
12.	50270151	904581	COIN DOOR FRAME (11 5/8"x13 3/8")
15.	50270159	404357	LOCKING ARM ASSEMBLY

COIN SWITCH AND BULB REPLACEMENT
PARTS LIST

NO.	CENTURI P/N:	MANUFACTURING P/N:	DESCRIPTION:
1.	50270167	404428	SWITCH & C.R.E.M. COIL BRACKET ASS'y
2.	50270143	904701	COIN CHUTE
3.	50270166	904598	COIN RETURN BOX
4.	50270168	905115	BAR
5.	50130061	904845	SWITCH
6.	50270164	904762	SWITCH COVER

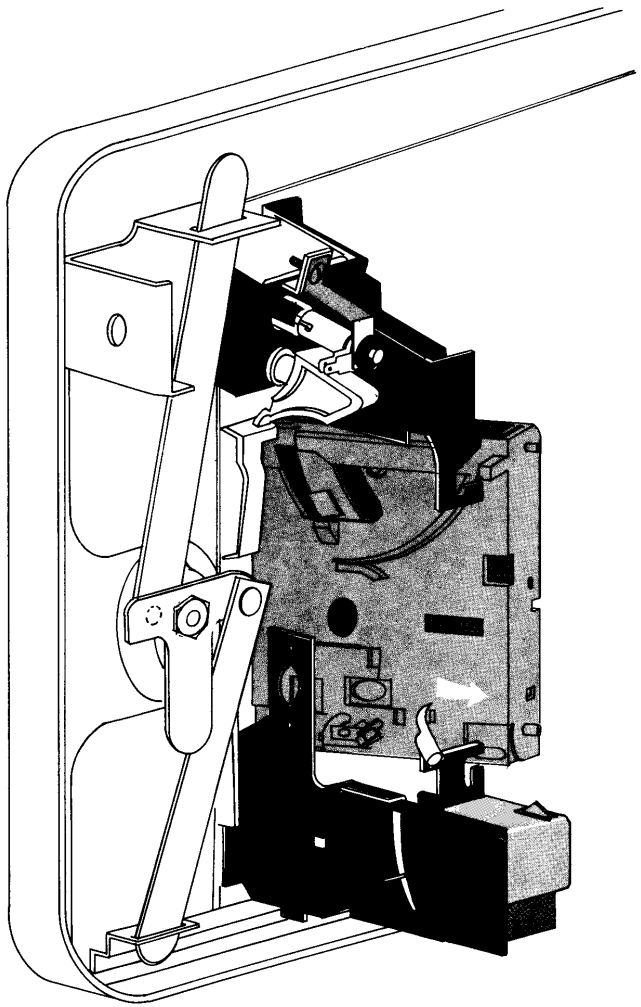

SPRING CLIP, THEN LIFT AND REMOVE

						QC. APV'D	PROD. APV'D	QTY.	ASSEMBLY NO
				TOLERANCES Unless Otherwise Specified		centun Inc.			HIALEAH, FLORIDA 33014
				FRACTIONS ± 1/32		NAME REMOVING COIN MECHANISM.			
				DECIMALS 2 PL ± .015					
				DECIMALS 3 PL ± .005					
				HOLES + .003 − .001		MATL'S.	HEAT TREAT.		FINISH
REV. LET.	ECN NO.	REVISION	BY	ANGLES ± 1/2°		DWN. A.G.	APP'D.	DATE 4-16-82	SCALE	PART NO. 50270144	REV.
				SHT. MET BENDS ± 2°							

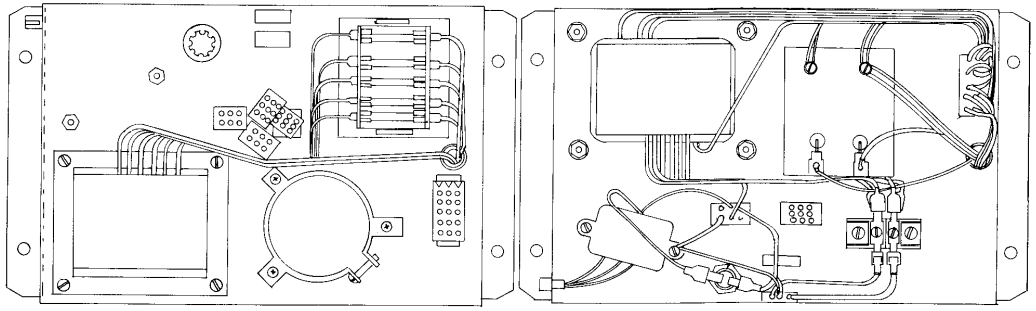

TOP VIEW

BOTTOM VIEW

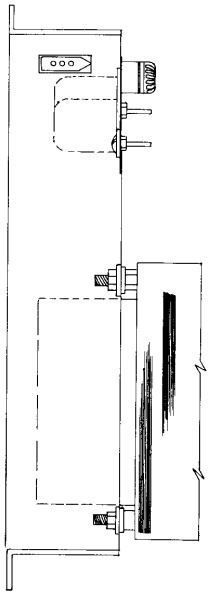

TRANSFORMER

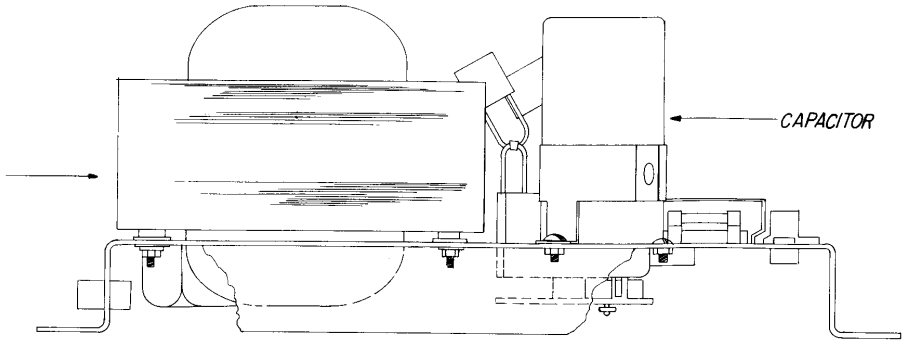

CAPACITOR

THE MATERIAL CONTAINED HEREIN IS CONFIDENTIAL AND NO PART OF IT CAN BE REPRODUCED WITHOUT THE EXPRESSED PERMISSION OF CENTURI, INC.

QC. APV'D	PROD. APV'D	QTY.	ASSEMBLY NO.

REV. LET.	ECN NO.	REVISION	BY

TOLERANCES
Unless Otherwise Specified

FRACTIONS	± 1/32
DECIMALS 2 PL	± .015
DECIMALS 3 PL	± .005
HOLES	+ .003
	- .001
ANGLES	± 1/2°
SHT. MET BENDS	± 2°

centuri HIALEAH, FLORIDA 33014

NAME: POWER SUPPLY, TUNNEL HUNT

MATL'L. | HEAT TREAT. | FINISH

DWN.	APP'D.	DATE	SCALE	PART NO.	REV.
A.G.		5-6-82			

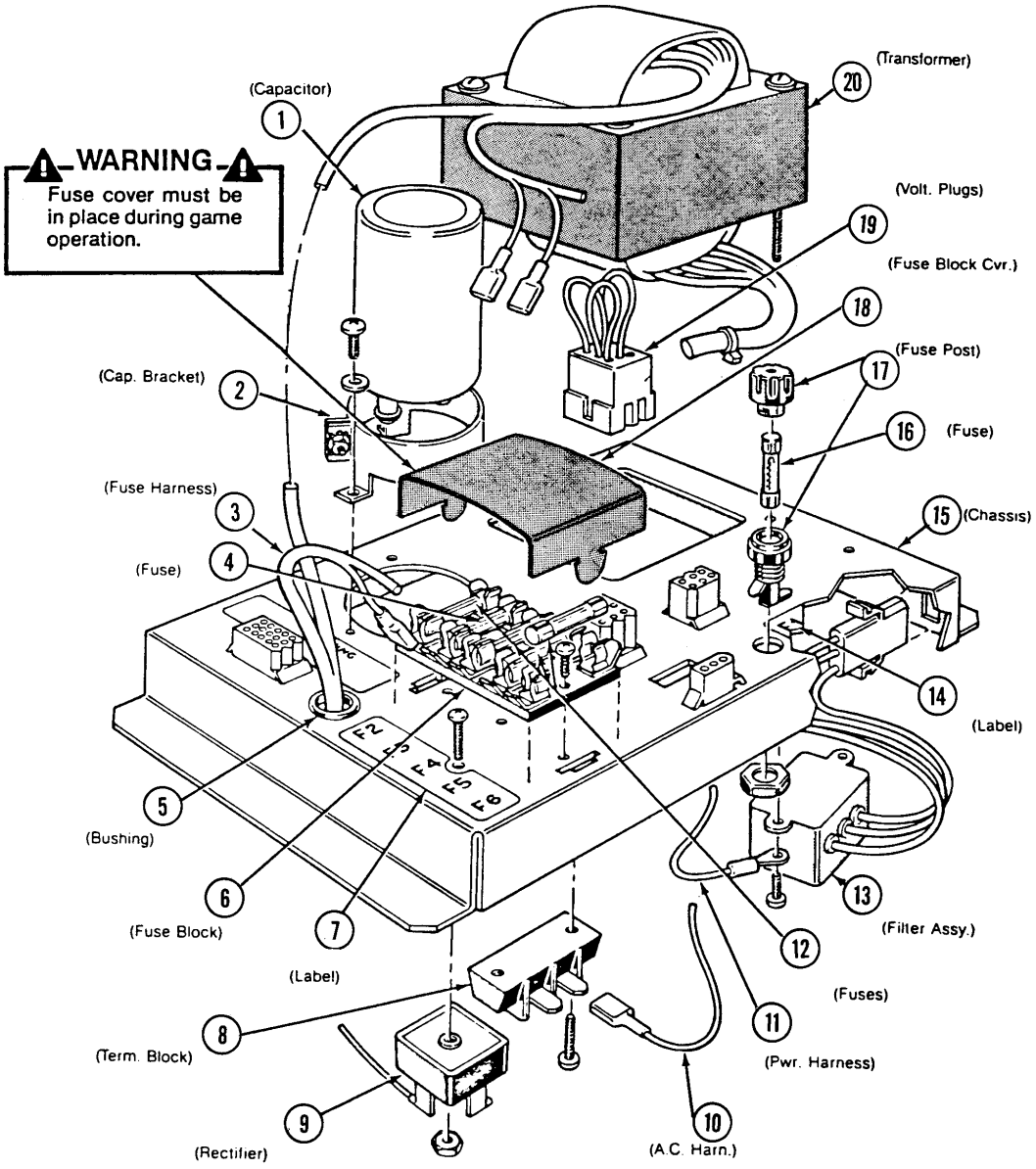

Power Supply Assembly

POWER SUPPLY ASS'Y (EXPLODED VIEW)
PARTS LIST

ITEM:	CENTURI P/N:	DESCRIPTION:
1.	50060225	CAPACITOR
2.	50270210	CAP. BRACKET
3.	50270211	FUSE HARNESS
4.	50230020	FUSE
5.	50270216	BUSHING
6.	50230060	FUSE BLOCK
7.	50270217	LABEL
8.	50270215	TERM. BLOCK
9.	50290021	RECTIFIER
10.	50270214	A.C. HARNESS
11.	50270213	PWR. HARNESS
12.	50230058	FUSES
13.	50270212	FILTER ASS'Y
14.	50270218	LABEL
15.	50270208	CHASSIS
16.	50230059	FUSE
17.	50230061	FUSE POST
18.	50270209	FUSE BLOCK CVR.
19.	384-12-0700	VOLT. PLUGS 120V
	384-12-0800	VOLT. PLUGS 100V
	384-12-0900	VOLT. PLUGS 200V
	384-12-1000	VOLT. PLUGS 220V
	384-12-1100	VOLT. PLUGS 240V
20.	50280089	TRANSFORMER

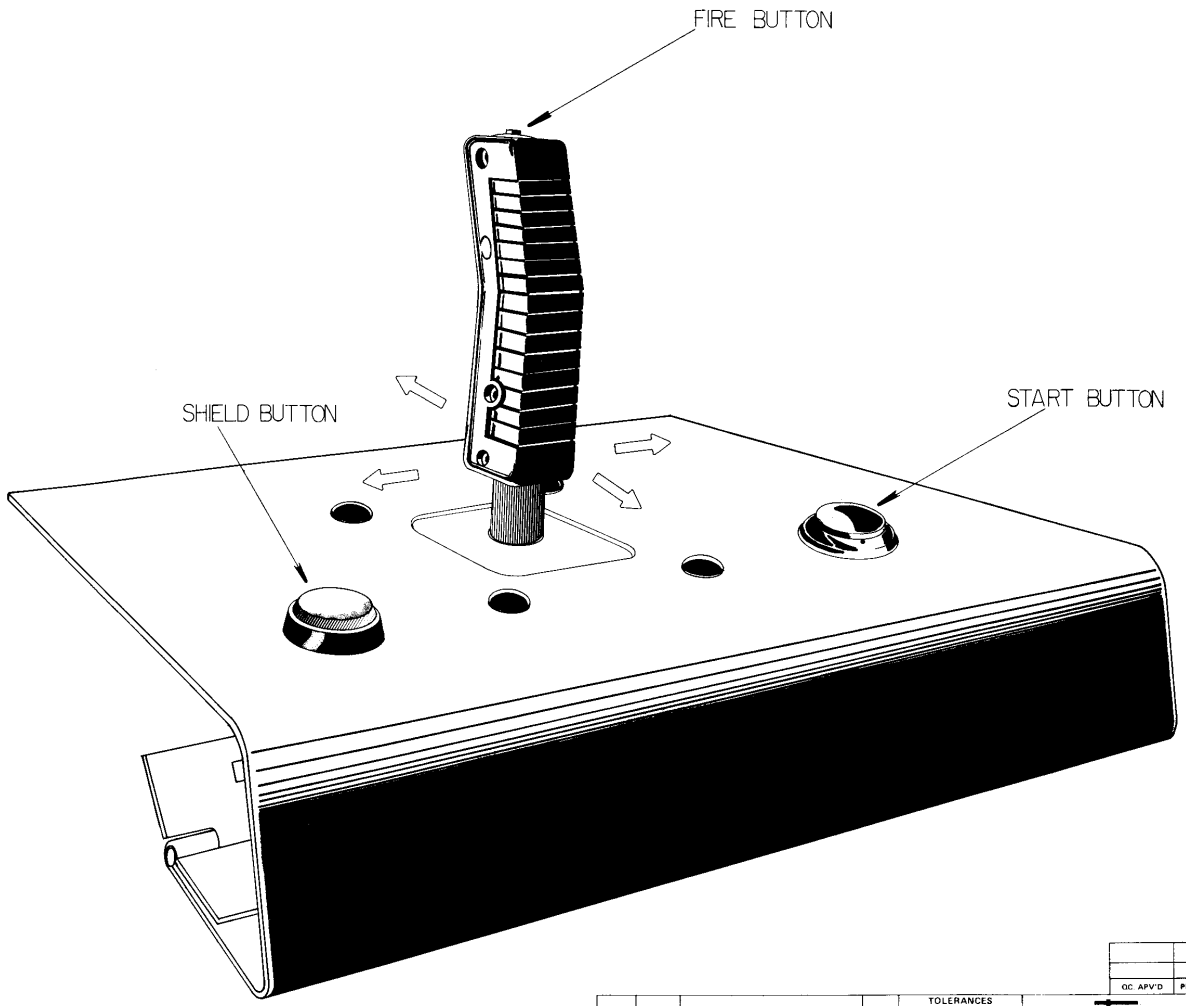

QC. APV'D	PROD. APV'D	QTY.	ASSEMBLY NO

REV. LET.	ECN NO.	REVISION	BY

TOLERANCES
Unless Otherwise Specified

FRACTIONS	±	1/32
DECIMALS 2 PL	±	.015
DECIMALS 3 PL	±	.005
HOLES	+	.003
	−	.001
ANGLES	±	1/2
SHT. MET BENDS	±	2°

centuri inc. HIALEAH, FLORIDA 33014

NAME: CONTROL PANEL

MAT'L'S. | HEAT TREAT. | FINISH

DWN.	APP'D.	DATE	SCALE	PART NO.	REV.
A.G		4-28-82			

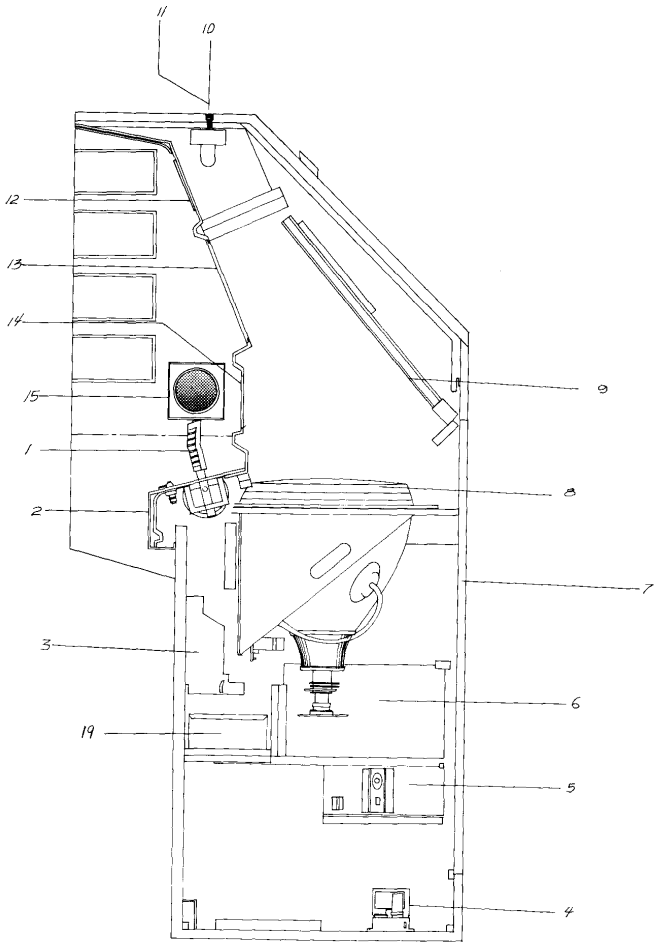

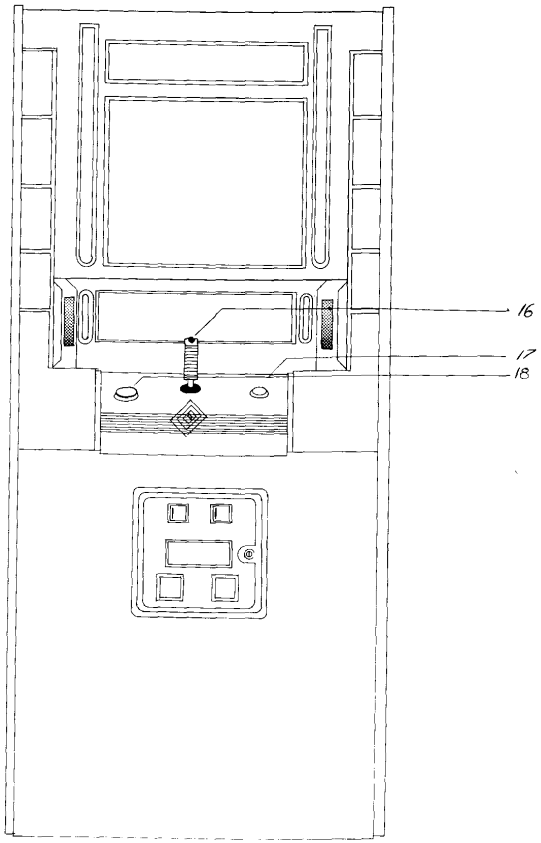

QC. APV'D	PROD. APV'D	QTY.	ASSEMBLY NO.

REV. LET.	ECN NO.	REVISION	BY

TOLERANCES
Unless Otherwise Specified
FRACTIONS ± 1/32
DECIMALS 2 PL ± .015
DECIMALS 3 PL ± .005
HOLES + .003 − .001
ANGLES ± 1/2°
SHT. MET BENDS ± 2°

centuri inc. HIALEAH, FLORIDA 33014

NAME COMPLETE GAME LESS PKG.

MATL'S.	HEAT TREAT.	FINISH

DWN.	APP'D.	DATE	SCALE	PART NO.	REV.
A.G.		5-6-82			

COMPLETE GAME LESS/PKG.

PARTS LIST

ITEM:	CENTURI P/N:	DESCRIPTION:
1.	50130094	JOYSTICK ASS'Y
2.	384-01-1600	CONTROL PANEL ASS'Y
3.	360-14-0700	COINCO COIN DOOR ASS'Y
4.	50350007	POWER SUPPLY ASS'Y
5.	384-13-0100	REG/AUDIO P.C.B. ASS'Y
6.	384-13-0200	C.P.U. BOARD ASS'Y
7.	384-01-0900	BACK DOOR ASS'Y
8.	50250024 or 50250026	MONITOR COLOR 19"
9.	384-08-1300	MIRROR
10,11.	361-14-0300A	FLUORESCENT LAMP/SW. WIRED ASS'Y
12.	384-06-0200	SCREEND MARGUEE
13.	384-04-2200	VIEWING PANEL (PLEX.)
14.	384-06-0200	INSTRUCTION PANEL
15.	50200011	SPEAKER
16.	50130049	START BUTTON
17.	50130105	FIRE
18.	50130093	SHIELD BUTTON
19.	375-01-1700A	CASH BOX WELD/ASS'y

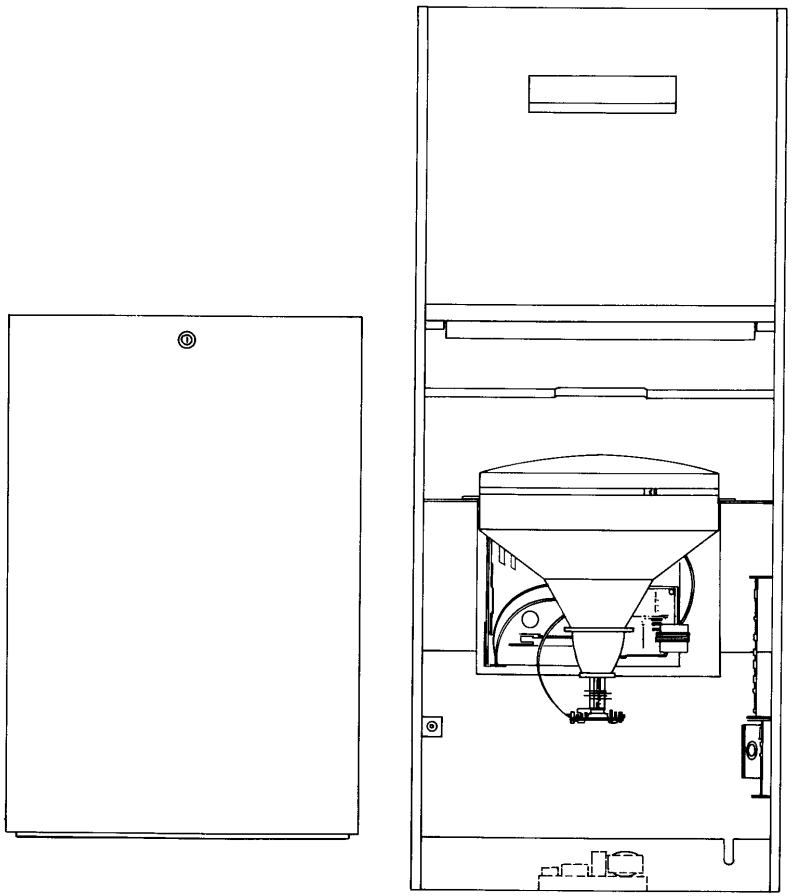

CABINET REAR VIEW.

						QC. APV'D	PROD. APV'D	QTY.	ASSEMBLY NO
				TOLERANCES Unless Otherwise Specified	centun	HIALEAH, FLORIDA 33014			
				FRACTIONS ± 1/32 DECIMALS 2 PL ± .015 DECIMALS 3 PL ± .005 HOLES + .003 − .001 ANGLES ± 1/2° SHT. MET BENDS ± 2°	NAME CABINET REAR VIEW				
					MATL'S.	HEAT TREAT.	FINISH		
REV. LET.	ECN NO.	REVISION	BY		DWN. AG.	APP'D.	DATE 5-7-82	SCALE	PART NO. REV.

C.P.U. BOARD ASS'Y

PARTS LIST

NO.	PART NUMBER:	DESCRIPTION:	QNTY.
1.	50210250	P.C.B. (BARE)	1
2.	50030210	1/4 WATT, 5%, 47 OHM, RESISTOR	1
3.	50030125	1/4 WATT, 5%, 220 OHM, RESISTOR	5
4.	50030095	1/4 WATT, 5%, 330 OHM,RESISTOR	3
5.	50030010	1/4 WATT, 5%, 470 OHM, RESISTOR	10
6.	50030051	1/4 WATT, 5%, 1K OHM, RESISTOR	64
7.	50030087	1/4 WATT, 5%, 1.5K OHM, RESISTOR	1
8.	50030001	1/4 WATT, 5%, 2.2K OHM, RESISTOR	1
9.	50030006	1/4 WATT, 5%, 4.7K OHM, RESISTOR	15
10.	50030149	1/4 WATT, 5%, 5.6K OHM, RESISTOR	2
11.	50030165	1/4 WATT, 5%, 8.2K OHM, RESISTOR	1
12.	50030063	1/4 WATT, 5%, 10K OHM, RESISTOR	13
13.	50030106	1/4 WATT, 5%, 12K OHM, RESISTOR	1
14.	50030151	1/4 WATT, 5%, 22K OHM, RESISTOR	4
15.	50030093	1/4 WATT, 5%, 27K OHM, RESISTOR	1
16.	50030148	1/4 WATT, 5%, 39K OHM, RESISTOR	8
17.	50030150	1/4 WATT, 5%, 47K OHM, RESISTOR	2
18.	50030146	1/4 WATT, 5%, 15K OHM, RESISTOR	1
19.	50030003	1/4 WATT, 5%, 330K OHM, RESISTOR	1
20.	50040208	100V, .047Mf, MYLAR CAPACITOR	3
21.	50040001	25V, .1Mf, CERAMIC CAPACITOR	84
22.	50040049	25V, .01Mf, CERAMIC CAPACITOR	1
23.	50040209	100V, 100Pf, MICA CAPACITOR	1
24.	50060060	25V, 10Mf, ELECTROLYTIC, AXIAL CAP.	2
25.	50060189	25V, 470Mf, ELECTROLYTIC, AXIAL CAP.	2
26.	50100042	IN 751, DIODE	1

C.P.U. BOARD ASS'Y

PARTS LIST

NO.	PART NUMBER:	DESCRIPTION:	QNTY.
27.	50100008	LED	1
28.	50070023	12.096 Mhz, CRYSTAL	1
29.	50370004	TEST POINT	26
30.	50130034	8 POSITION DIP SWITCH, SPST	2
31.	50020010	2N 3643, TRANSISTOR (Q-4)	1
32.	50020024	2N 3904, TRANSISTOR (Q-2,7,8,9)	4
33.	50020046	2N 3906, TRANSISTOR (Q-1,6)	2
34.	50020134	2N 6044, TRANSISTOR (Q-3,5)	2
35.	50010254	LM 324, I.C. (L-11)	1
36.	50010046	LM 339, I.C. (M-11)	1
37.	50010019 S	74S74, I.C. (K-8)	1
38.	50010002 LS	74LS00, I.C. (K-3,H-5,N-8)	3
39.	50010004 S	74S02, I.C. (R-4)	1
40.	50010005	7404, I.C. (R-2)	1
41.	50010005 S	74S04, I.C. (R-3)	1
42.	50010005 LS	74LS04, I.C. (P-3,J-6,H-8)	3
43.	50010142	7407, I.C. (B-12,D-12,F-12)	3
44.	50010096 S	74S08, I.C. (A-6,R-8)	2
45.	50010096 LS	74LS08, I.C. (E-3,K-4,10,R-6,P-8,B-11)	6
46.	50010007 LS	74LS10, I.C. (J-8)	1
47.	50010161 LS	74LS11, I.C. (J-7,N-10)	2
48.	50010170 LS	74LS14, I.C. (J-2)	1
49.	50010009	7425, I.C (R-5)	1
50.	50010105 S	74S32, I.C. (F-3)	1
51	50010105 LS	74LS32, I.C. (J-5,L-10,M-10,N-11,R-9)	5
52.	50010014 LS	74LS42, I.C. (H-3,H-4)	2

C.P.U. BOARD ASS'Y

PARTS LIST

NO.	PART NUMBER:	DESCRIPTION:	QNTY.
53.	50010019	7474, I.C. (L-2)	1
54.	50010019 LS	74LS74, I.C. (L-3)	1
55.	50010021 LS	74LS83, I.C. (B-5,C-5,C-7,E-7)	4
56.	50010022 LS	74LS86, I.C. (H-7)	1
57.	50010023	7490, I.C. (J-3)	1
58.	50010368	74125, I.C. (J-10)	1
59.	50010192 LS	74LS139, I.C. (H-2, J-4,P-4)	3
60.	50010045 LS	74LS157, I.C. (E-5,F-5,7,9,10,L-5,6,7,H-6,10)	10
61.	50010035 LS	74LS161, I.C. (K-5,P-6,7,R-7,C-8,D-8,9,E-8, F-8,J-9)	10
62.	50010369	74163, I.C. (M-2,3,N-2,3,P-2)	5
63.	50010221 LS	74LS163A, I.C. (L-8,M-8)	2
64.	50010085 LS	74LS164, I.C. (C-9,A-10)	2
65.	50010139 LS	74LS175, I.C. (M-4,A-5)	2
66.	50010139 S	74S175, I.C. (K-9)	1
67.	50010289 LS	74LS195, I.C. (A-9,B-9,B-10)	3
68.	50010273 LS	74LS244, I.C. (B-1,C-1,E-2,F-2,M-5)	5
69.	50010359 LS	74LS251, I.C. (R-12)	1
70.	50010261 LS	74LS273, I.C. (D-5,7,10,K-6,7,A-7,B-7,R-10)	8
71.	50010252 LS	74LS374, I.C. (N-5,J-12)	2
72.	50010335 LS	27LS00, I.C. (L-9,M-9,N-9,P-9,10)	5
73.	50010230	2101A-2, I.C. (B-6,C-6,D-6,E-6,9,10,F-6)	7
74.	50010310	2114, (E-4,F-4)	2
75.	50010366	6502A, (C-2)	1
76.	50010367	POKEY, (C-3,4,D-3,4)	2
77.	50010361	82S25, RAM (F-11,H-11,N-6,7)	4
78.	50010362	82S123, PROM (C-11,D-11)	2

C.P.U. BOARD ASS'Y

PARTS LIST

NO.	PART NUMBER:	DESCRIPTION:	QNTY.
79.	50010363	82S129, PROM (N-4)	1
80.	50010364	82S131, PROM (A-8,B-8)	2
81.	50010365	82S137, PROM (H-9,C-10)	2
82.	50010171	2716, EPROM	6
83.	50150111	16 PIN I.C. SOCKET SOLDERTAIL	7
84.	50150060	40 PIN I.C. SOCKET SOLDERTAIL	1
85.	50150061	24 PIN I.C. SOCKET SOLDERTAIL	6

REG/AUDIO P.C.B. ASS'Y

PARTS LIST

NO.	PART NUMBER:	DESCRIPTION:	QNTY.
1.	50030231	2.7 OHM, 1 WATT, 5%, RESISTOR	1
2.	50030357	4 OHM, 5 WATT, 5%, WIREWOUND RESISTOR	1
3.	50030358	.1 OHM, 7 WATT, 3%, WIREWOUND RESISTOR	1
4.	50120021	1K OHM, VERT. P.C.B. MOUNTING CERMET TRIM POT	1
5.	50030345	1 OHM, 1/4 WATT, 5%, RESISTOR	2
6.	50030019	10 OHM, 1/4 WATT, 5%, RESISTOR	4
7.	50030256	100 OHM, 1/4 WATT, 5%, RESISTOR	3
8.	50030051	1K OHM, 1/4 WATT, 5%, RESISTOR	2
9.	50030063	10K OHM, 1/4 WATT, 5%, RESISTOR	2
10.	50030014	270 OHM, 1/4 WATT, 5%, RESISTOR	1
11.	50030101	33 OHM, 1/4 WATT, 5%, RESISTOR	1
12.	50030005	3.9K OHM, 1/4 WATT, 5%, RESISTOR	1
13.	50030149	5.6K OHM, 1/4 WATT, 5%, RESISTOR	2
14.	50030359	7.5K OHM, 1/4 WATT, 5%, RESISTOR	1
15.	50030094	220 OHM, 1/2 WATT, 5%, RESISTOR	2
16.	50030360	22 OHM, 10 WATT, 5%, WIREWOUND RESISTOR	1
17.	50060222	1000Uf, AXIAL ELECTROLYTIC @ 25V, CAP.	1
18.	50060189	470Uf, AXIAL ELECTROLYTIC @ 25V, CAP.	3
19.	50060223	22Uf, AXIAL ELECTROLYTIC @ 35V, CAP.	2
20.	50060224	3300Uf, AXIAL ELECTROLYTIC @ 35V, CAP.	4
21.	50060095	1Uf, AXIAL ELECTROLYTIC @ 50V, CAP.	2
22.	50040001	.1Uf, CERAMIC DISC, RADIAL @ 25V, CAP.	4
23.	50040049	.01Uf, CERAMIC DISC, RADIAL @ 25V, CAP.	2
24.	50040206	.001Uf, CERAMIC DISC, RADIAL @ 25V, CAP.	3
25.	50040207	.22Uf, CERAMIC DISC, RADIAL @ 25V, CAP.	4
26.	50100028	IN 4002 DIODE	2

REG/AUDIO P.C.B. ASS'y

PARTS LIST

NO.	PART NUMBER:	DESCRIPTION:	QNTY.
27.	50100101	IN 5401 DIODE	4
28.	50020131	TIP 32, TRANSISTOR	1
29.	50020037	2N 3055, TRANSISTOR	1
30.	50020132	LM 305, 5V, REGULATOR	1
31.	50010258	7812 + 12V, REGULATOR	1
32.	50020133	7905 - 5V, REGULATOR	1
33.	50010360	TDA 2002 A, 8 WATT, AMPLIFIER	2
34.	50150196	9 PIN MOLEX RECEPTACLE W/EARS OR TABS	1
35.	50150195	12 PIN MOLEX RECEPTACLE W/EARS OR TABS	1
36.	50150336	4 PIN MOLEX RECEPTACLE W/EARS	1
37.	50150194	6 PIN MOLEX RECEPTACLE W/EARS OR TABS	2
38.	50270104	THERMO COMPOUND	A/R
39.	50370002	THERMO CONDUCTIVE SILICON INSULATOR	5
40.	50370003	TO-3 SILICON INSULATOR	1
41.	50150247	FEMALE PINS MOLEX, P.C.B. MOUNT	37
42.	10010032	6-32x1/2 PA/PH/MS	4
43.	10150003	6-32 KEP NUT	4
44.	10010146	6-32x3/8" NYLON SCREW	5
45.	384-03-0600	HEAT SINK	1
46.	50370004	TEST POINT	14
47.	50210251	REG/AUDIO II P.C.B. (BARE)	1

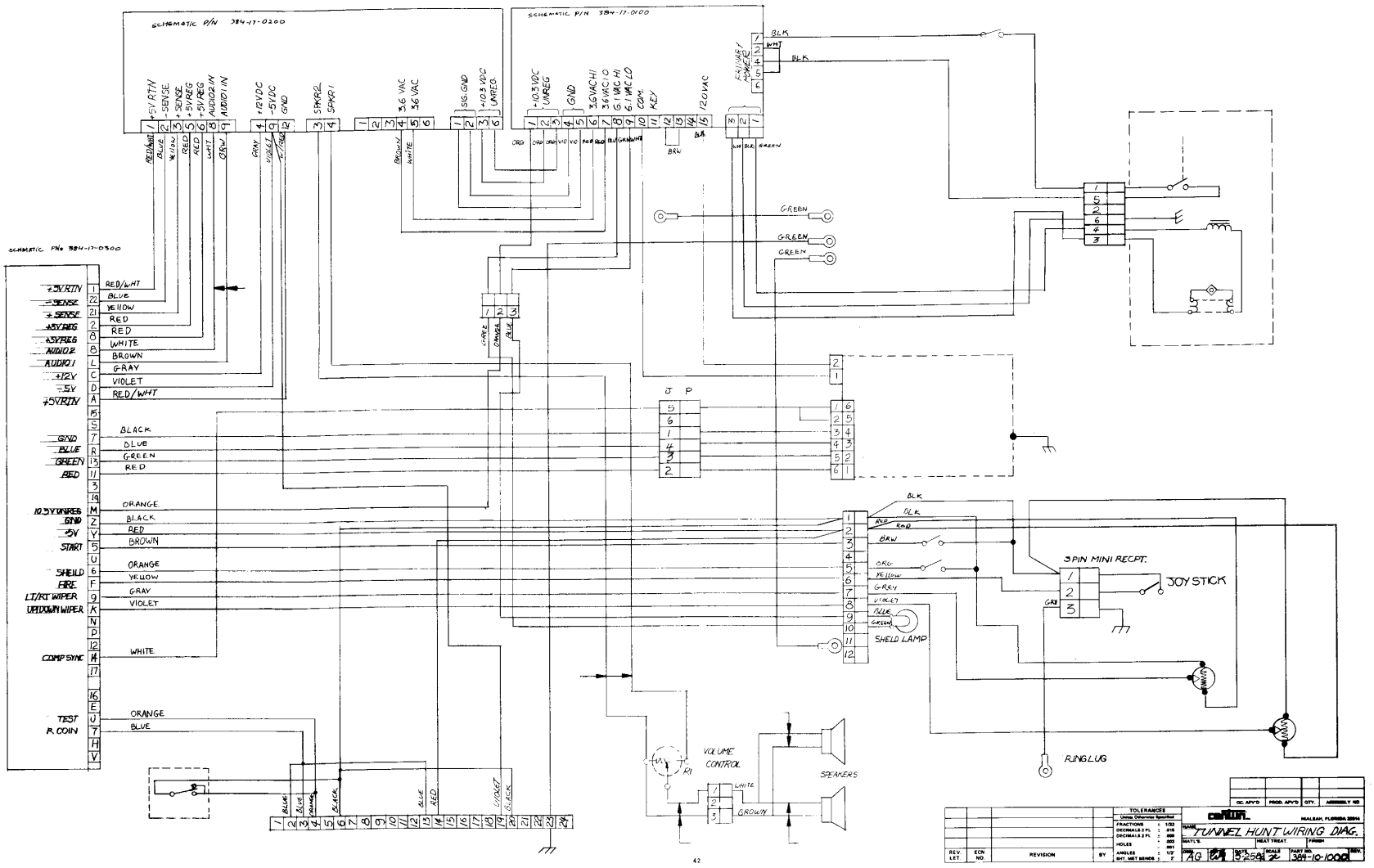

REV. LET.	ECN NO.	REVISION	BY

TOLERANCES
Unless Otherwise Specified
FRACTIONS ± 1/32
DECIMALS 2 Pl. ± .015
DECIMALS 3 Pl. ± .005
HOLES ± .001
ANGLES ± 1/2°
SHT. MET. BENDS ± 1°

QC. APV'D	PROD. APV'D	QTY.	ASSEMBLY NO

CENTURI
HIALEAH, FLORIDA 33014

NAME: TUNNEL HUNT WIRING DIAG.

MAT'L | HEAT TREAT. | FINISH

DWG. AG | DATE 5-25-82 | SCALE | PART NO. 384-10-1000 | REV.

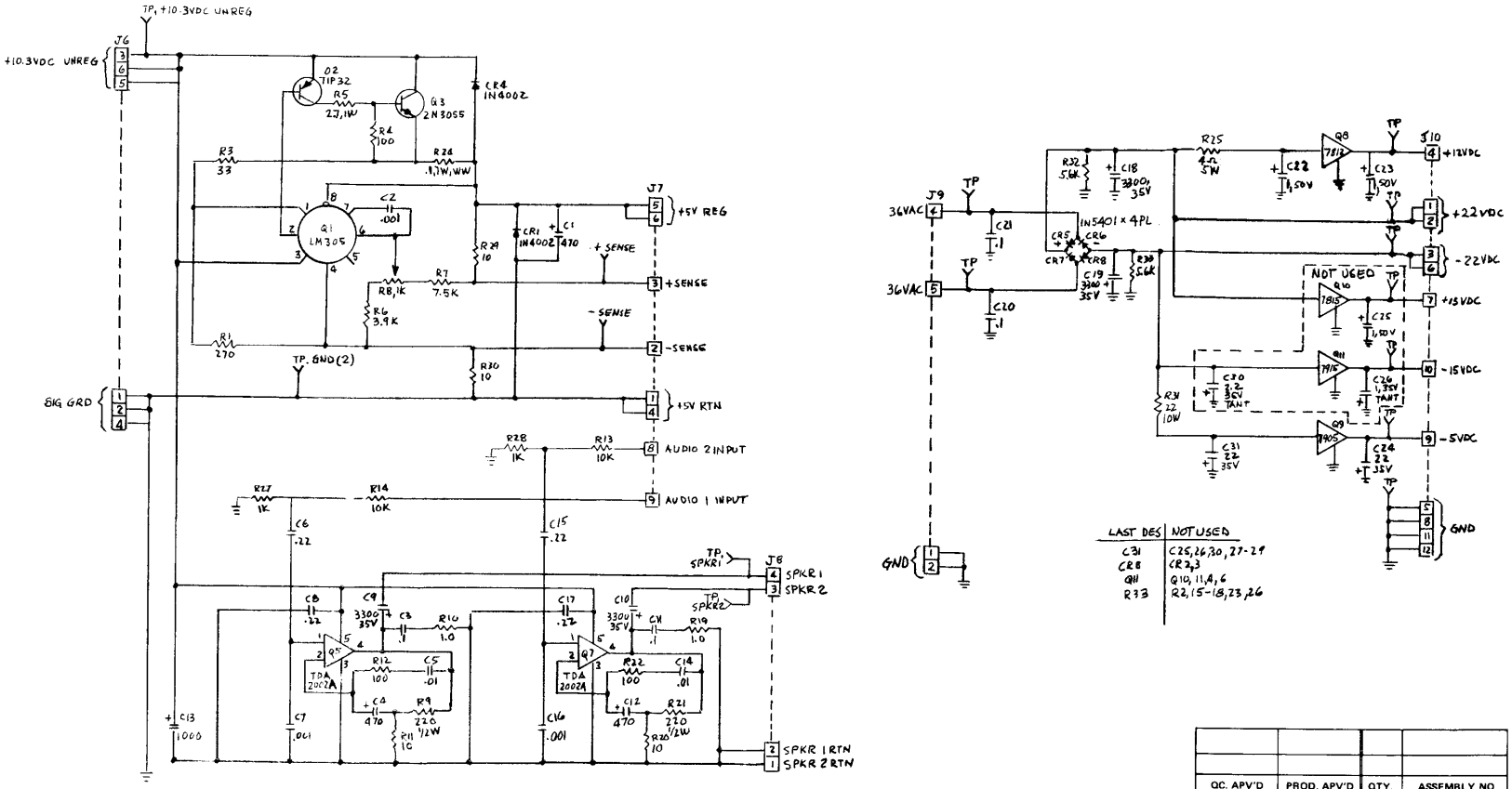

LAST DES	NOT USED
C31	C25,26,30,27-29
CR8	CR2,3
Q11	Q10, 11,4,6
R33	R2,15-18,23,26

REV. LET.	ECN NO.	REVISION	BY

TOLERANCES	
Unless Otherwise Specified	
FRACTIONS	± 1/32
DECIMALS 2 PL	± .015
DECIMALS 3 PL	± .005
HOLES	+ .003 − .001
ANGLES	± 1/2°
SHT. MET BENDS	± 2°

QC. APV'D	PROD. APV'D	QTY.	ASSEMBLY NO

centun inc HIALEAH, FLORIDA 33014

NAME SCHEMATIC, REGULATOR/AUDIO II P.C. BD

MAT'L'S.	HEAT TREAT.	FINISH

DWN.	APV'D.	DATE	SCALE	PART NO.	REV.
AAN		5-17-82		384-17-0200	

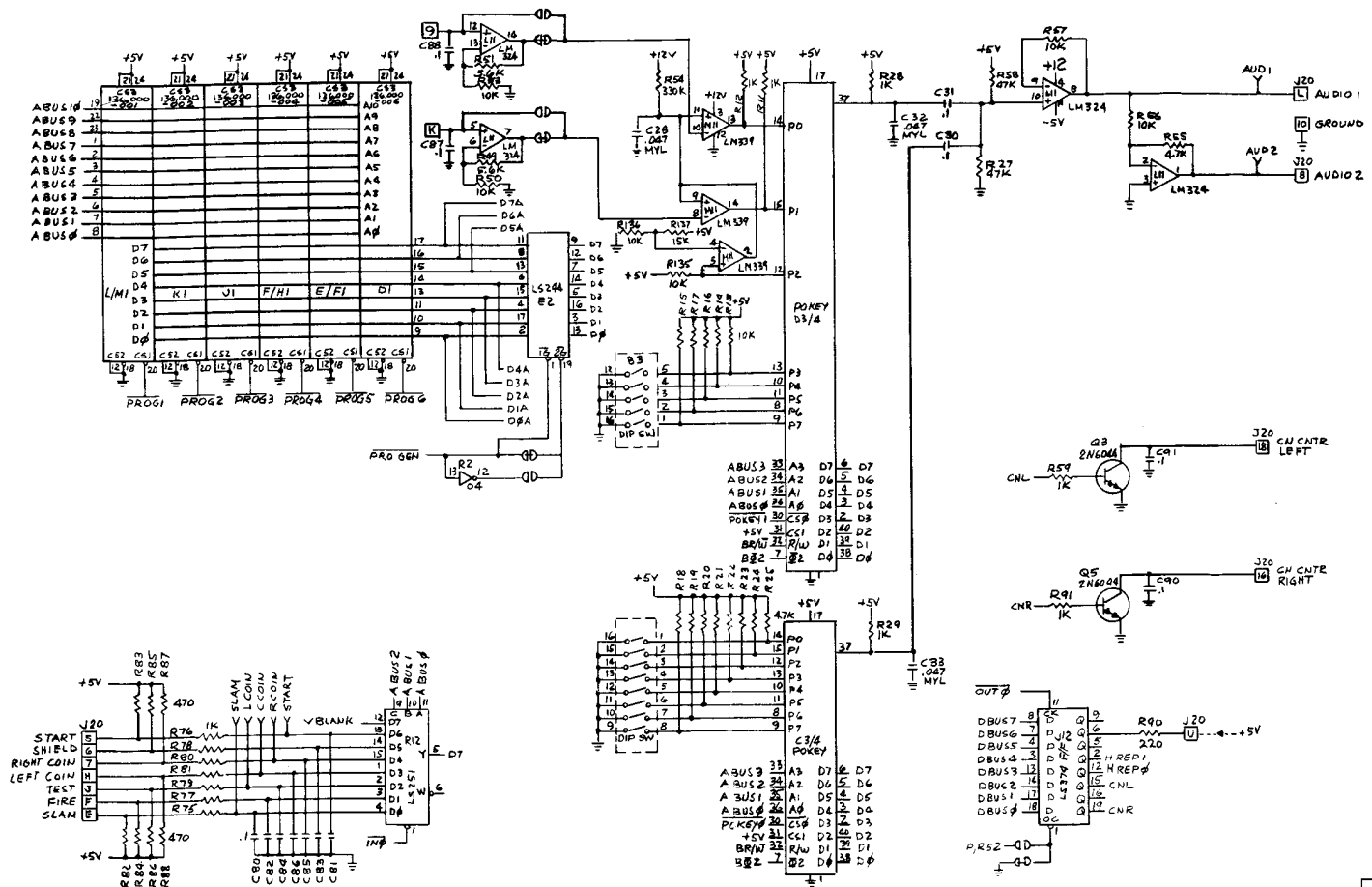

QC. APV'D	PROD. APV'D	QTY.	ASSEMBLY NO

REV. LET.	ECN NO.	REVISION	BY

TOLERANCES
Unless Otherwise Specified

FRACTIONS	±	1/32
DECIMALS 2 PL	±	.015
DECIMALS 3 PL	±	.005
HOLES	+	.003
	−	.001
ANGLES	±	1/2°
SHT. MET BENDS	±	2°

centun inc. HIALEAH, FLORIDA 33014

NAME: SCHEMATIC TUNNEL HUNT P.C. BD.

MATL'S. | HEAT TREAT. | FINISH

DWN. AAN | APP'D | DATE 5-18-82 | SCALE | PART NO. 384-17-0300 | REV.

1 OF 8

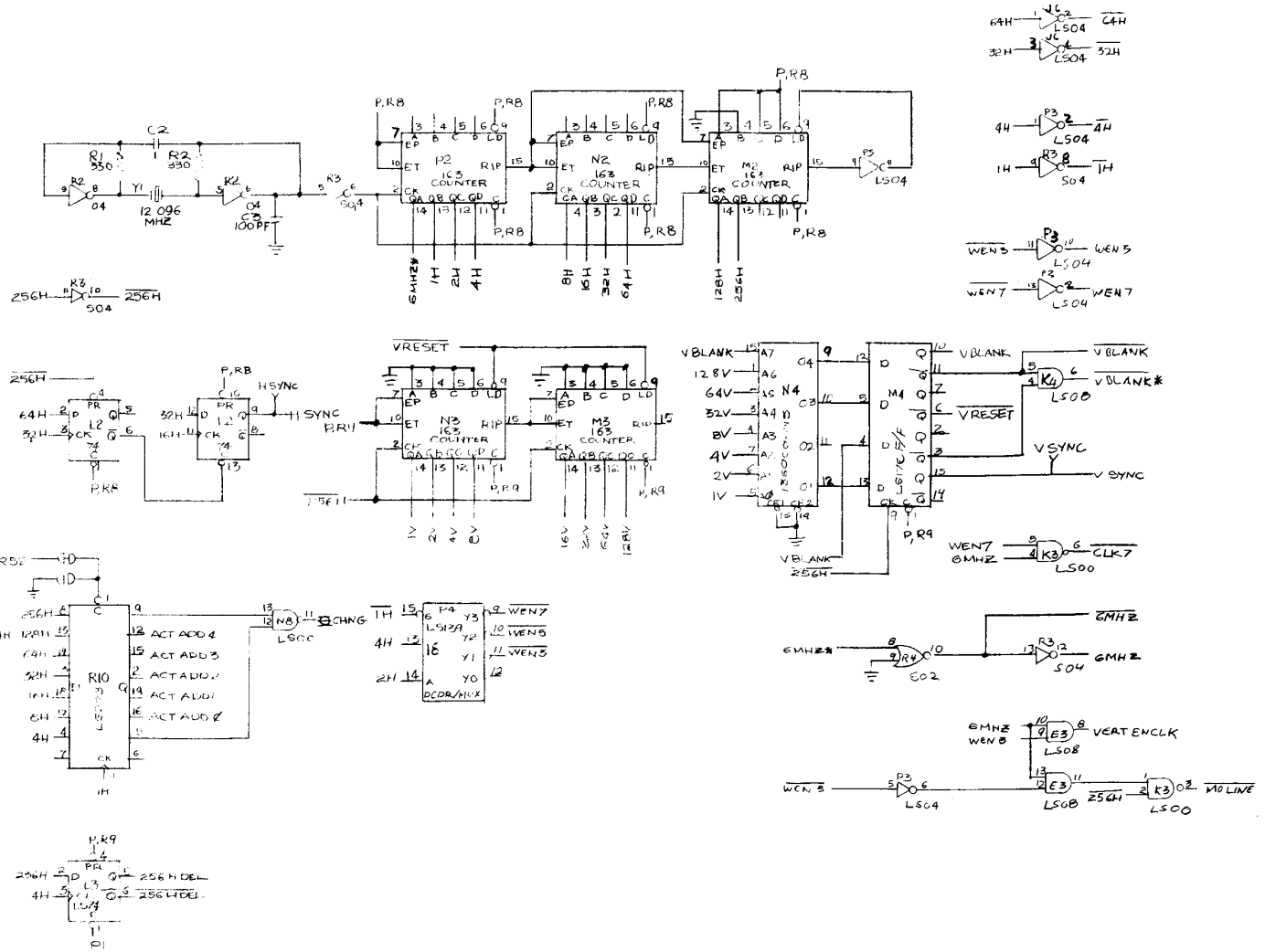

QC. APV'D	PROD. APV'D	QTY.	ASSEMBLY NO

REV. LET.	ECN NO.	REVISION	BY

TOLERANCES
Unless Otherwise Specified

FRACTIONS	±	1/32
DECIMALS 2 PL	±	.015
DECIMALS 3 PL	±	.005
HOLES	+	.003
	−	.001
ANGLES	±	1/2°
SHT. MET BENDS	±	2°

centun inc. HIALEAH, FLORIDA 33014

NAME: SCHEMATIC TUNNEL HUNT P.C.

MATL'S. | HEAT TREAT. | FINISH

DWN. ALBERTO | APPD. | DATE 5/20/82 | SCALE | PART NO. 384-17-0300 | REV.

2 OF 8

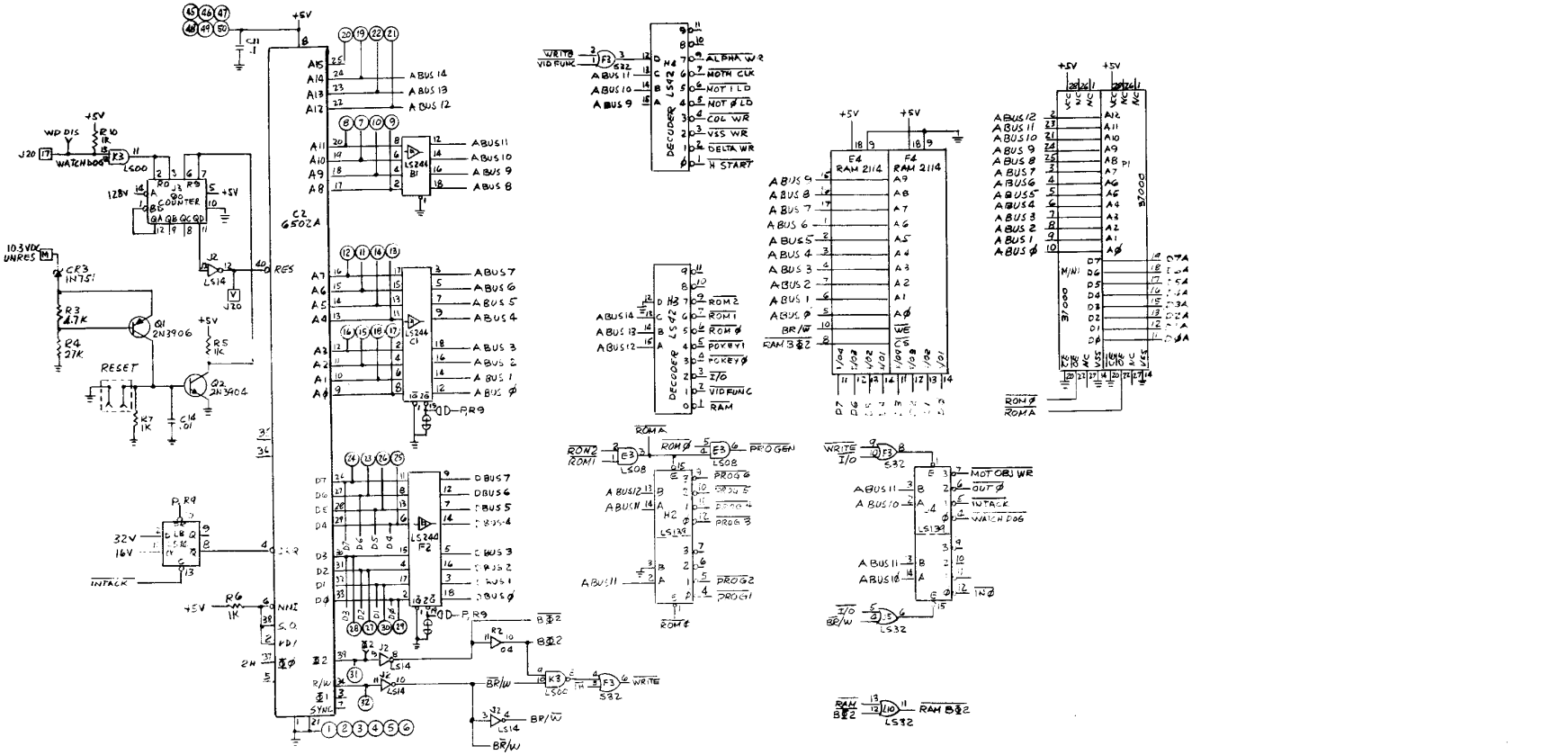

QC. APV'D	PROD. APV'D	QTY.	ASSEMBLY NO.

REV. LET.	ECN NO.	REVISION	BY

TOLERANCES
Unless Otherwise Specified

FRACTIONS	±	1/32
DECIMALS 2 PL	±	.015
DECIMALS 3 PL	±	.005
	+	.003
HOLES	−	.001
ANGLES	±	1/2°
SHT. MET BENDS	±	2°

centuri inc. HIALEAH, FLORIDA 33014

NAME SCHEMATIC TUNNEL-VISION P.C.B.

MATL'S.	HEAT TREAT.	FINISH

DWN.	APP'D	DATE	SCALE	PART NO.	REV.
AAH	DWK	5-24-82		394-7-0300	

3 OF 8

IC CHART

TYPE	VOLTAGE/PIN NO. GND	+5V	SPARE	+12V	+15V	-15V	-5V	UNUSED GATES
74L800	7	14						N8
74S02	7	14						R4, R4
7404	7	14						R3, R3
74S08	7	14						R3
74LS09	7	14						H8, H8, J6, P3
7407	7	14						
74S08	7	14						A6, A6, R8, R8, R8
74LS08	7	14						K4
74LS10	7	14						J8
74LS11	7	14						
74LS14	7	14						J2, J2
7425	7	14						
7432	7	14						P3
74__?__	7	14						
74163	8	16						
74LS42	8	16						
7474	7	14						
74LS74	7	14						
74LS93	12	5						
74LS86	7	14						H7
7490	10	5						
74125	7	14						
74LS189	8	16						
74LS167	8	16						
74LS161	8	16						
74LS163A	8	16						
74LS164	7	14						
74LS175	8	16						
74LS195	8	16						
74LS244	10	20						
74LS251	8	16						
74LS273	10	20						
74LS374	10	20						
82S25	8	16						
82S123	8	16						
82S129	8	16						
82S131	8	16						
82S137	9	18						
LM324			4				11	
LM339			3				12	M11
27L500	8	16						
2101A-2	8	22						
2114	9	18						
2114-2	9	18						
6316E	12	24						
74S74	7	14						
6502A	1,21	8						
74S175	8	16						
27000	14	28						
POKEY	1	17						

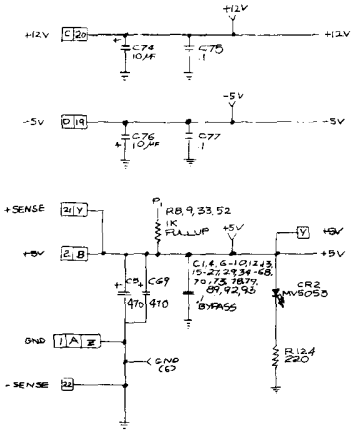

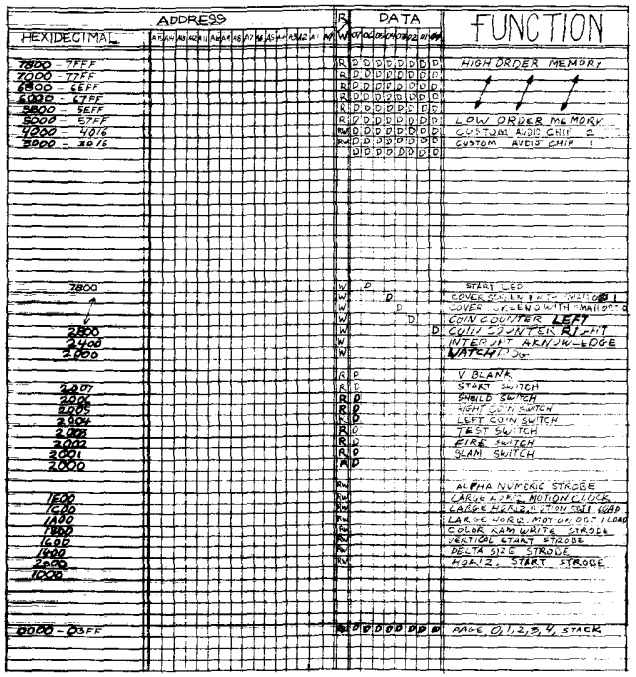

REFERANCE DESIG. HIGHEST	NOT USED
R 137	R89
C 93	
Q9	
CR3	CR1
Y1	

REV. LET.	ECN NO.	REVISION	BY

TOLERANCES (Unless Otherwise Specified)

FRACTIONS	±	1/32
DECIMALS 2 PL	±	.015
DECIMALS 3 PL	±	.005
HOLES	+	.003
	−	.001
ANGLES	±	1/2°
SHT. MET BENDS	±	2°

QC. APV'D	PROD. APV'D	QTY.	ASSEMBLY NO

centun inc. HIALEAH, FLORIDA 33014

NAME: SCHEMATIC TUNNEL HUNT PC BD

MATL'S. | HEAT TREAT. | FINISH

DWN. A.G. | CHK'D | DATE 5-19-82 | SCALE | PART NO. 384-17-0300 | REV.

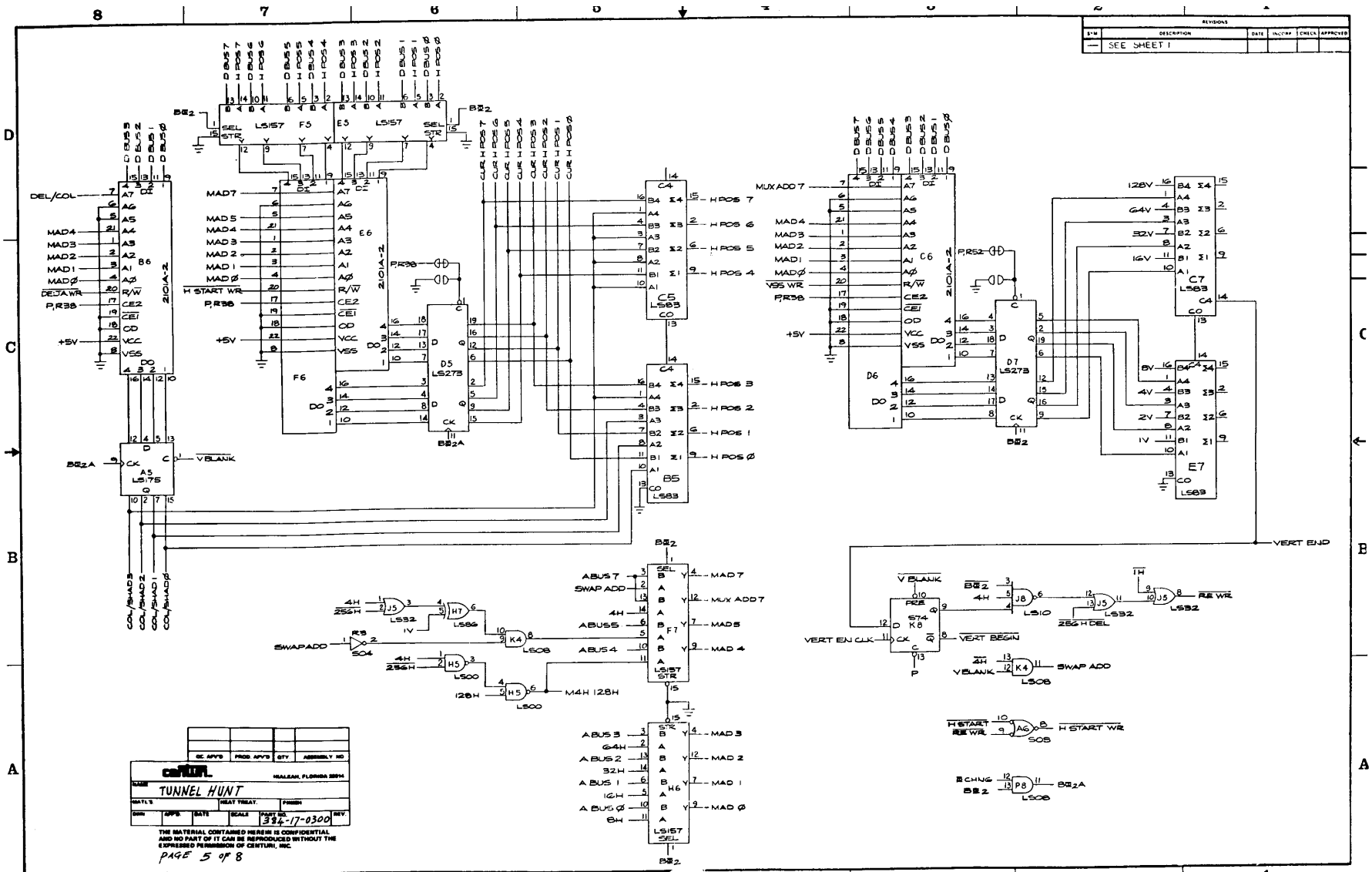
REVISIONS
SEE SHEET 1
TUNNEL HUNT
384-17-0300
THE MATERIAL CONTAINED HEREIN IS CONFIDENTIAL AND NO PART OF IT CAN BE REPRODUCED WITHOUT THE EXPRESSED PERMISSION OF CENTURI, INC.
PAGE 5 OF 8

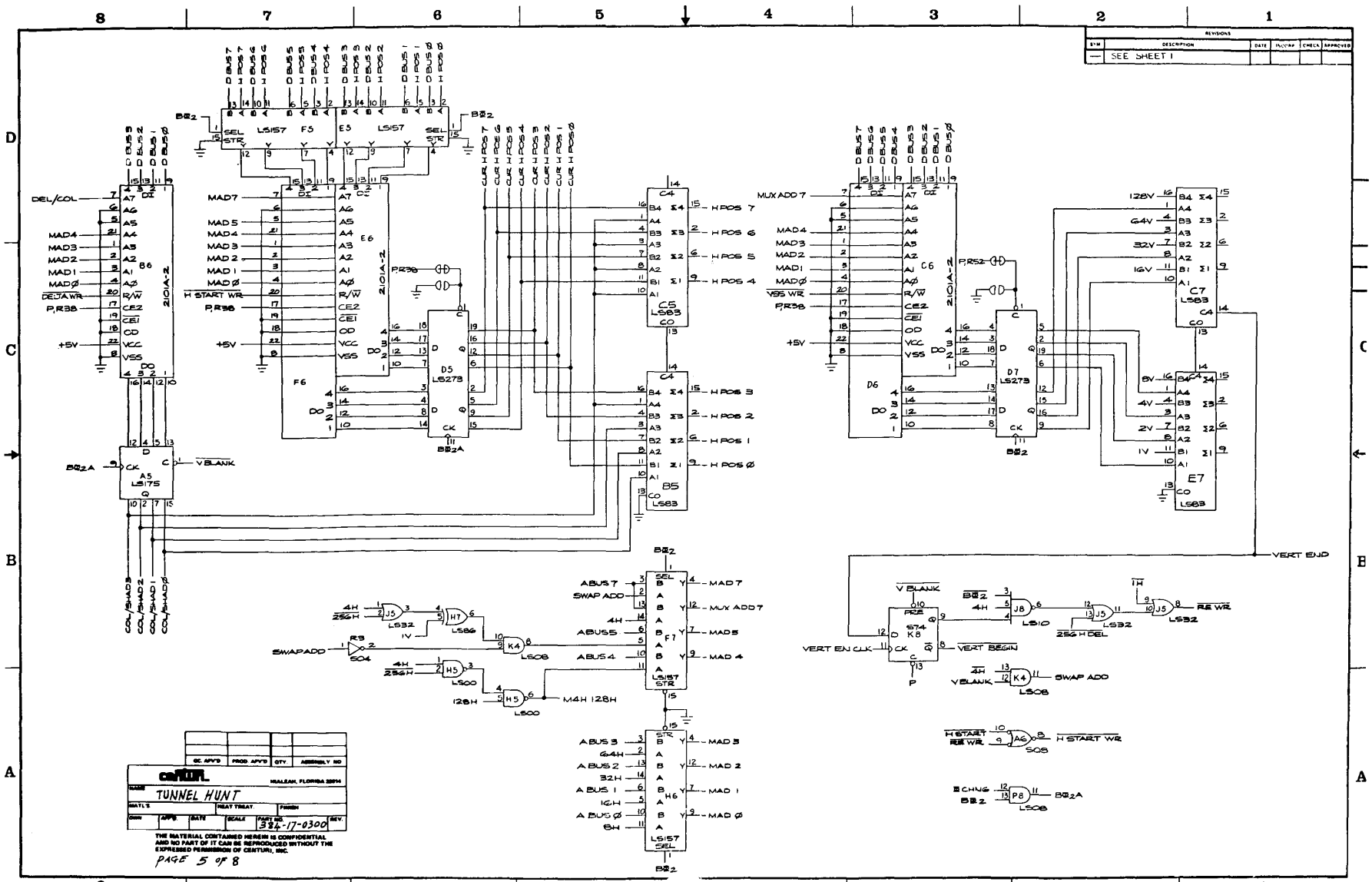
REVISIONS
SYM
DESCRIPTION
DATE
INCORP
CHECK
APPROVED
SEE SHEET 1
LS157
F5
E5
E6
F6
B6
A5
LS175
D5
LS273
C5
LS83
B5
C6
D6
D7
C7
E7
F7
H6
K8
S74
VERT END
VERT EN CLK
VERT BEGIN
SWAP ADD
H START WR
RE WR
CENTURI
HIALEAH, FLORIDA 33014
TUNNEL HUNT
384-17-0300
THE MATERIAL CONTAINED HEREIN IS CONFIDENTIAL AND NO PART OF IT CAN BE REPRODUCED WITHOUT THE EXPRESSED PERMISSION OF CENTURI, INC.
PAGE 5 OF 8

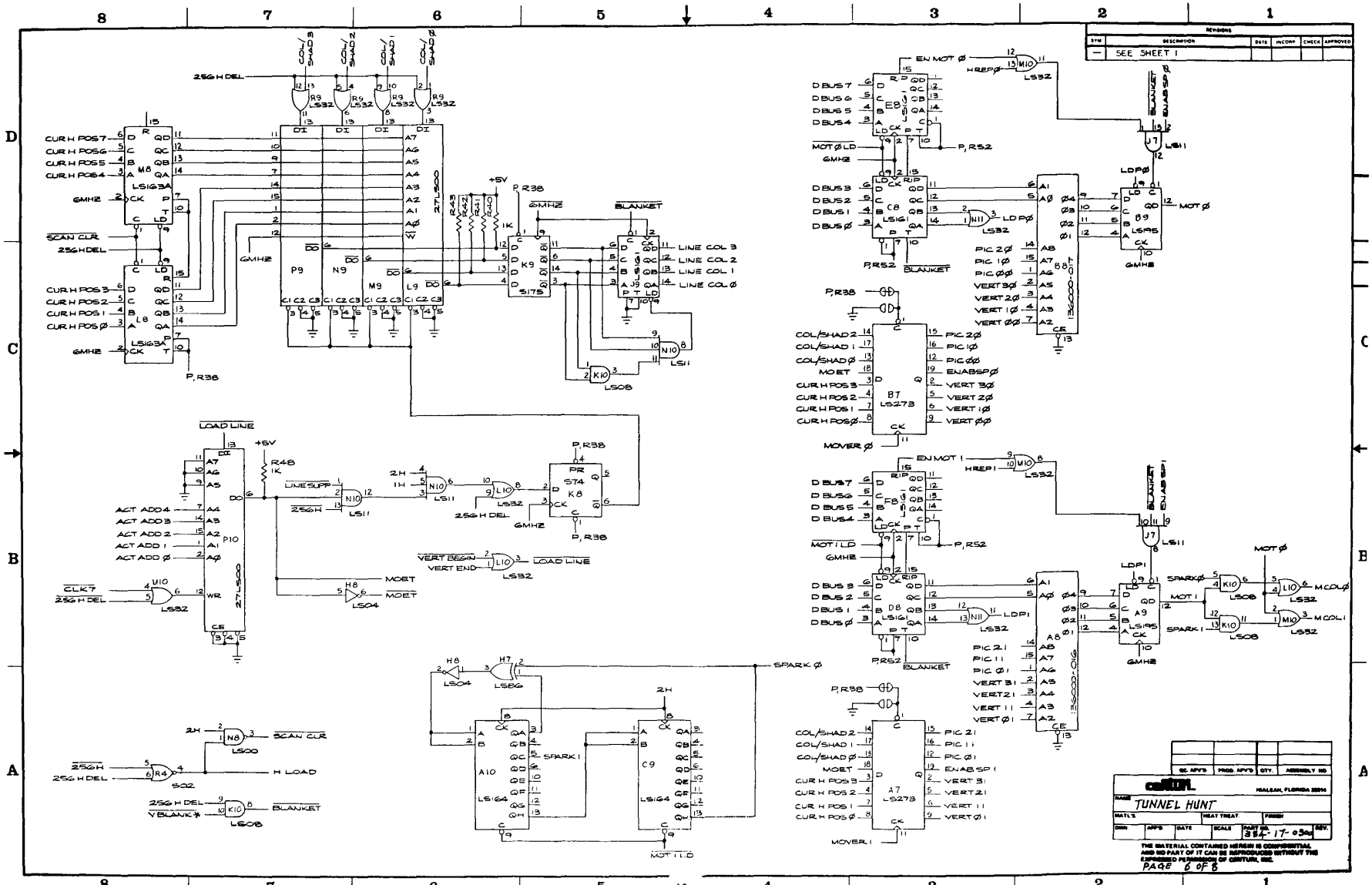
REVISIONS
SEE SHEET 1
TUNNEL HUNT
SCALE
DATE
APP'D
DWN
SIZE
PART NO. 17-03xx
REV.
THE MATERIAL CONTAINED HEREIN IS CONFIDENTIAL AND NO PART OF IT CAN BE REPRODUCED WITHOUT THE EXPRESSED PERMISSION OF CINTRON, INC.
PAGE 6 OF 8
256H DEL
COL/SHAD 3
COL/SHAD 2
COL/SHAD 1
COL/SHAD Ø
CUR H POS7
CUR H POS6
CUR H POS5
CUR H POS4
CUR H POS3
CUR H POS2
CUR H POS1
CUR H POSØ
GMH2
SCAN CLR
P, R38
LINE COL 3
LINE COL 2
LINE COL 1
LINE COLØ
LOAD LINE
ACT ADD 4
ACT ADD 3
ACT ADD 2
ACT ADD 1
ACT ADD Ø
CLK7
MOET
VERT BEGIN
VERT END
H LOAD
VBLANK*
BLANKET
SCAN CLR
SPARK Ø
SPARK 1
MOT 1 LD
EN MOT Ø
HREP Ø
DBUS7
DBUS6
DBUS5
DBUS4
MOT Ø LD
P, R52
DBUS3
DBUS2
DBUS1
DBUS Ø
LDP Ø
MOT Ø
PIC 2Ø
PIC 1Ø
PIC ØØ
VERT 3Ø
VERT 2Ø
VERT 1Ø
VERT ØØ
ENABSP Ø
MOVER Ø
EN MOT 1
HREP 1
MOT 1 LD
LDP 1
PIC 21
PIC 11
PIC Ø1
VERT 31
VERT 21
VERT 11
VERT Ø1
ENABSP 1
MOVER 1
MCOL Ø
MCOL 1

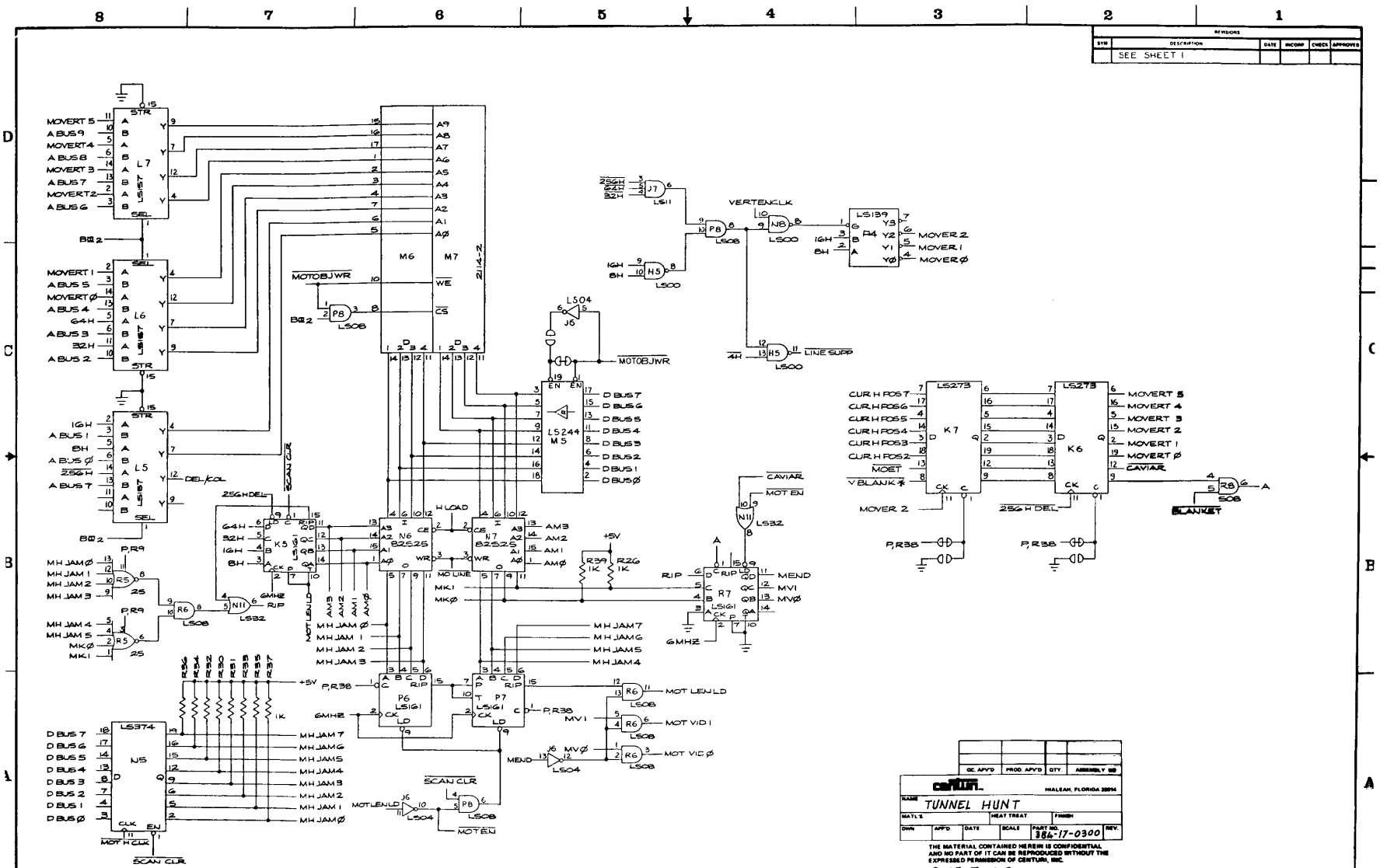
REVISIONS
SEE SHEET 1
TUNNEL HUNT
PAGE 7 OF 8
50

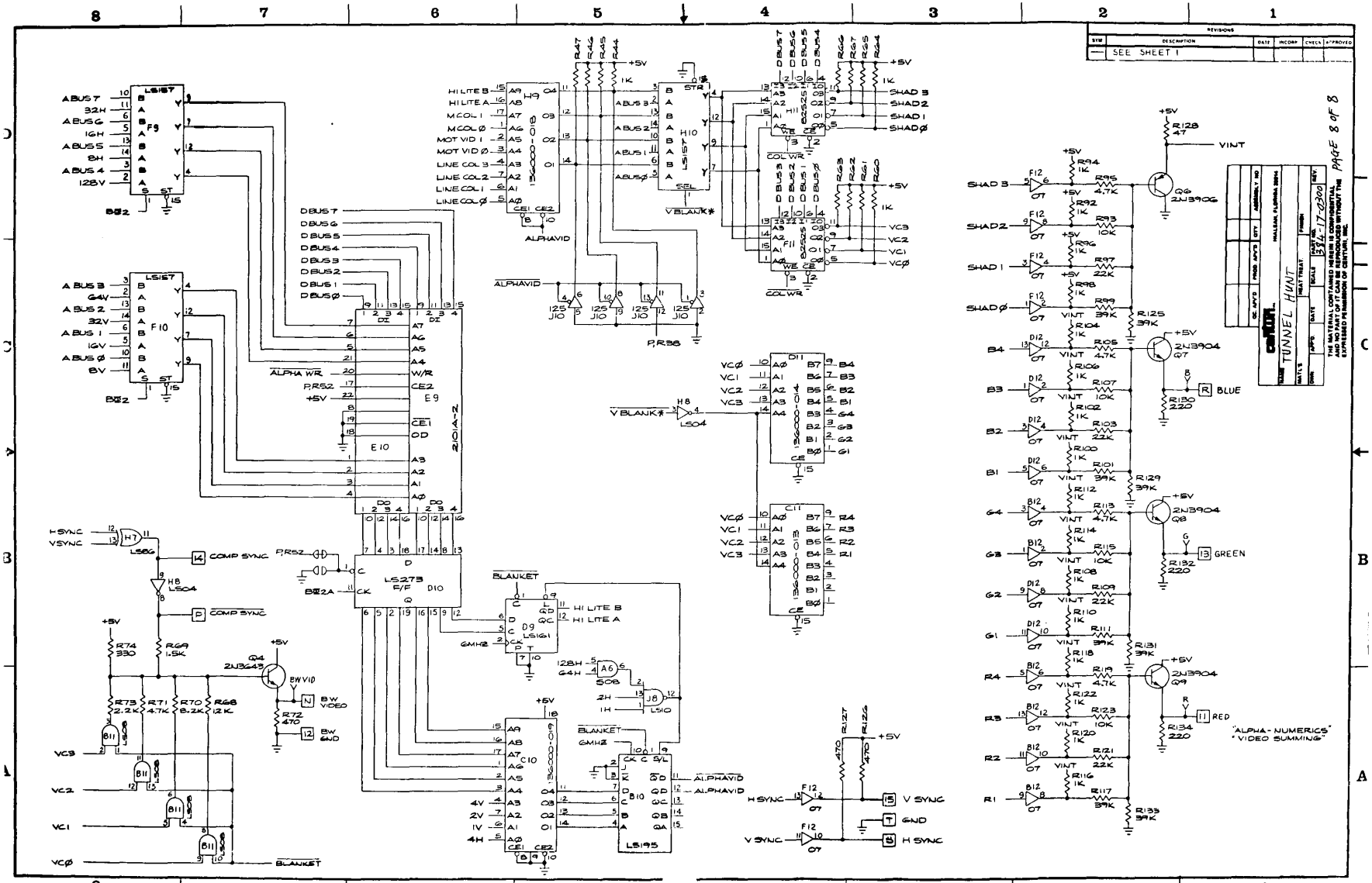

REVISIONS
SEE SHEET 1
TUNNEL HUNT
PAGE 8 OF 8
"ALPHA-NUMERICS"
"VIDEO SUMMING"