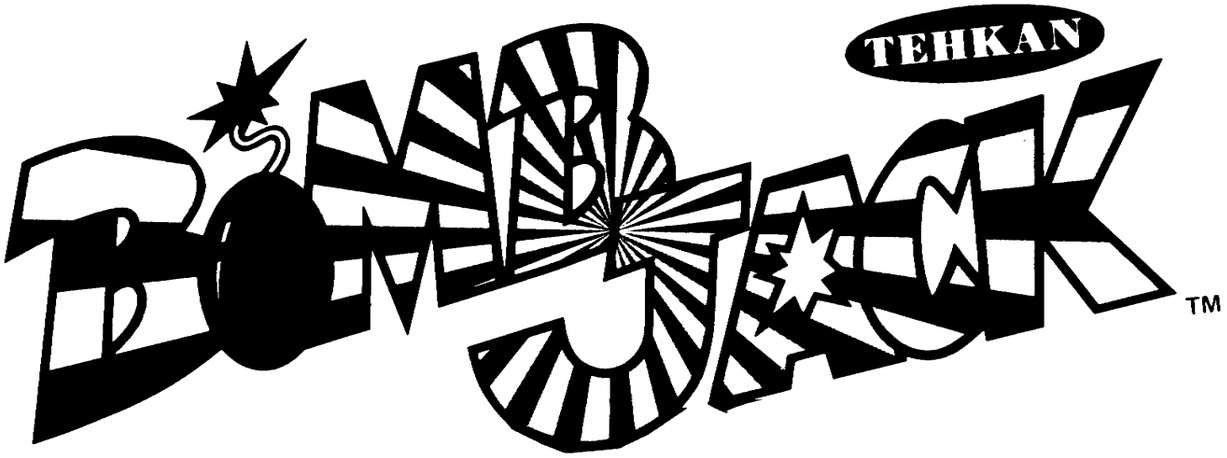

©COPYRIGHT 1984 TEHKAN LTD.

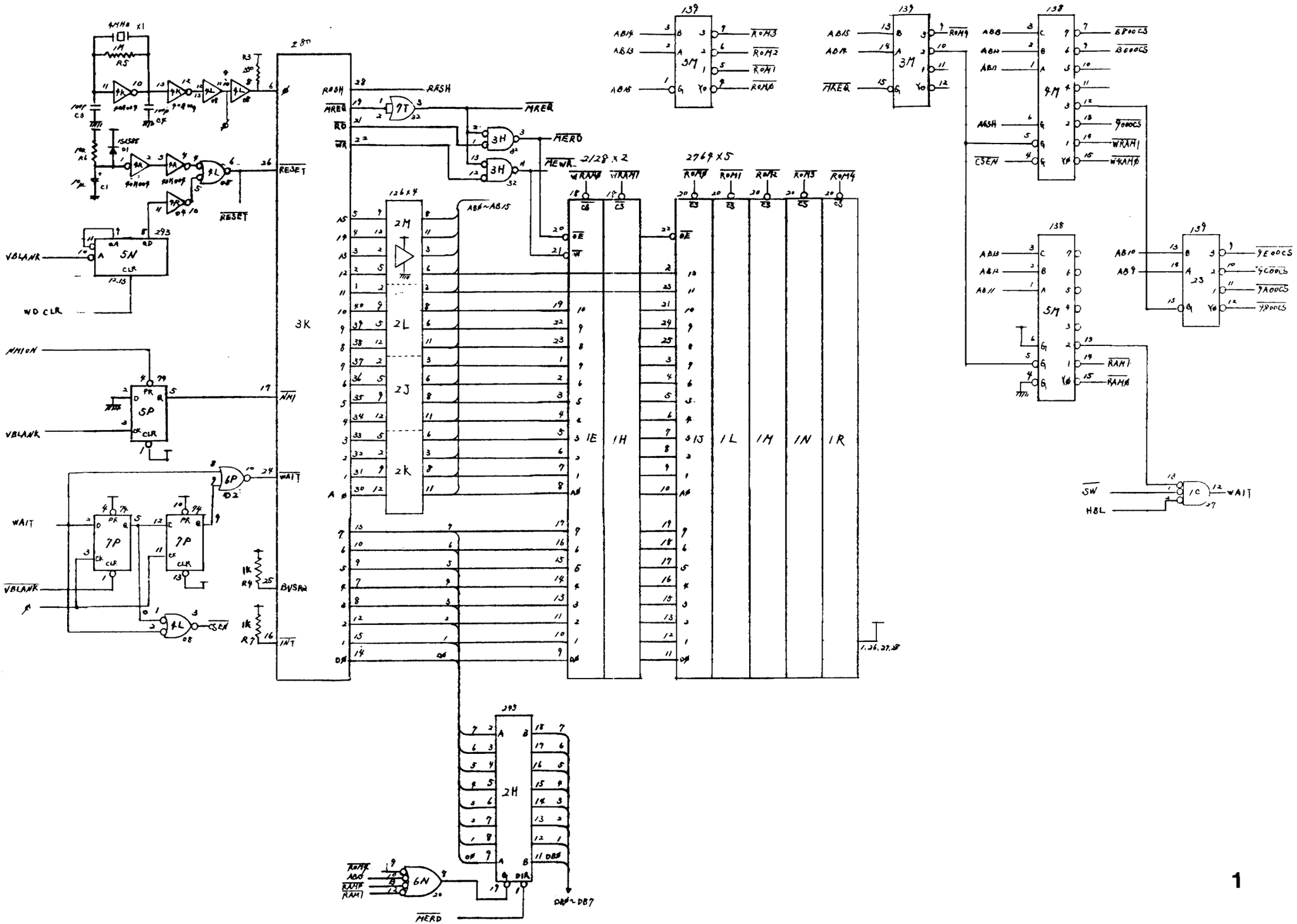

280
3K
126x4
2M
2L
2J
2K
2128 x 2
2764 x 5
1E
1H
1J
1L
1M
1N
1R
139
138
5N
5P
7P
6P
2H
6N
4M
5M
2S
1C
VBLANK
WD CLR
NMION
WAIT
RESET
RASH
MREQ
MERD
MEWR
BUSRQ
INT
CSEN
SW
HBL
DB0~DB7

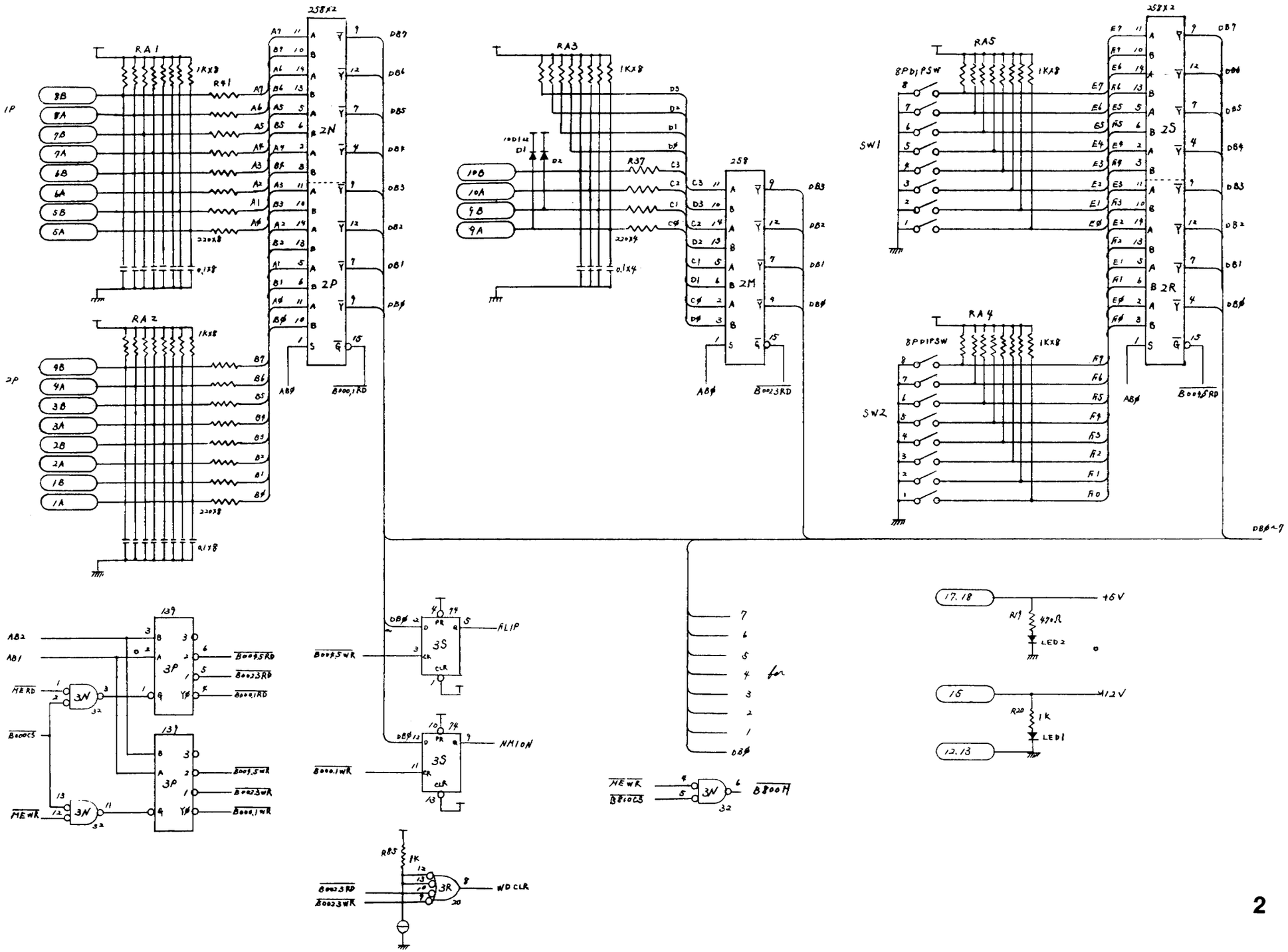

RA1
RA2
RA3
RA4
RA5
1KX8
R41
R37
258X2
258
2N
2P
2M
2S
2R
1P
2P
SW1
SW2
8PD1PSW
DB7
DB6
DB5
DB4
DB3
DB2
DB1
DB0
DB0~7
AB0
B000,1RD
B0023RD
B0045RD
139
3P
3N
3S
3R
AB2
AB1
MERD
B000CS
MEWR
B0045RD
B0023RD
B000,1RD
B0045WR
B0023WR
B000,1WR
FLIP
NMION
WDCLR
B0023RD
B0023WR
B800M
for
+5V
+12V
LED2
LED1
R19
R20
470Ω
1K

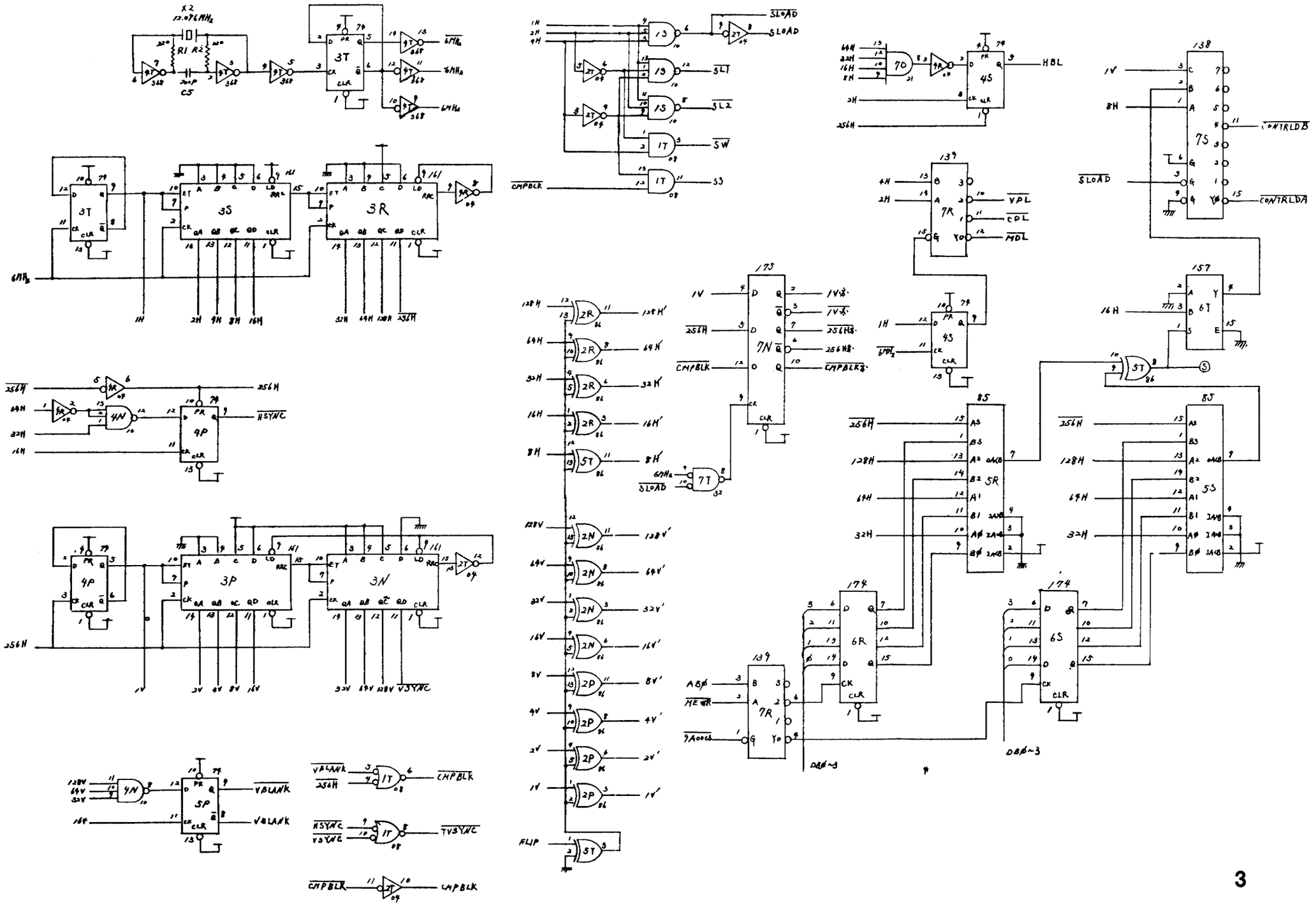
X2
12.096MHz
R1 R2
C5
3T
3S
3R
4P
4N
3P
3N
5P
4S
7O
7R
7S
6T
5T
7N
7T
5R
5S
6R
6S
SLOAD
SLT
SL2
SW
SS
CMPBLK
HBL
CONTRLDB
CONTRLDA
VPL
CDL
MDL
HSYNC
VSYNC
VBLANK
TVSYNC
FLIP
DBØ~3

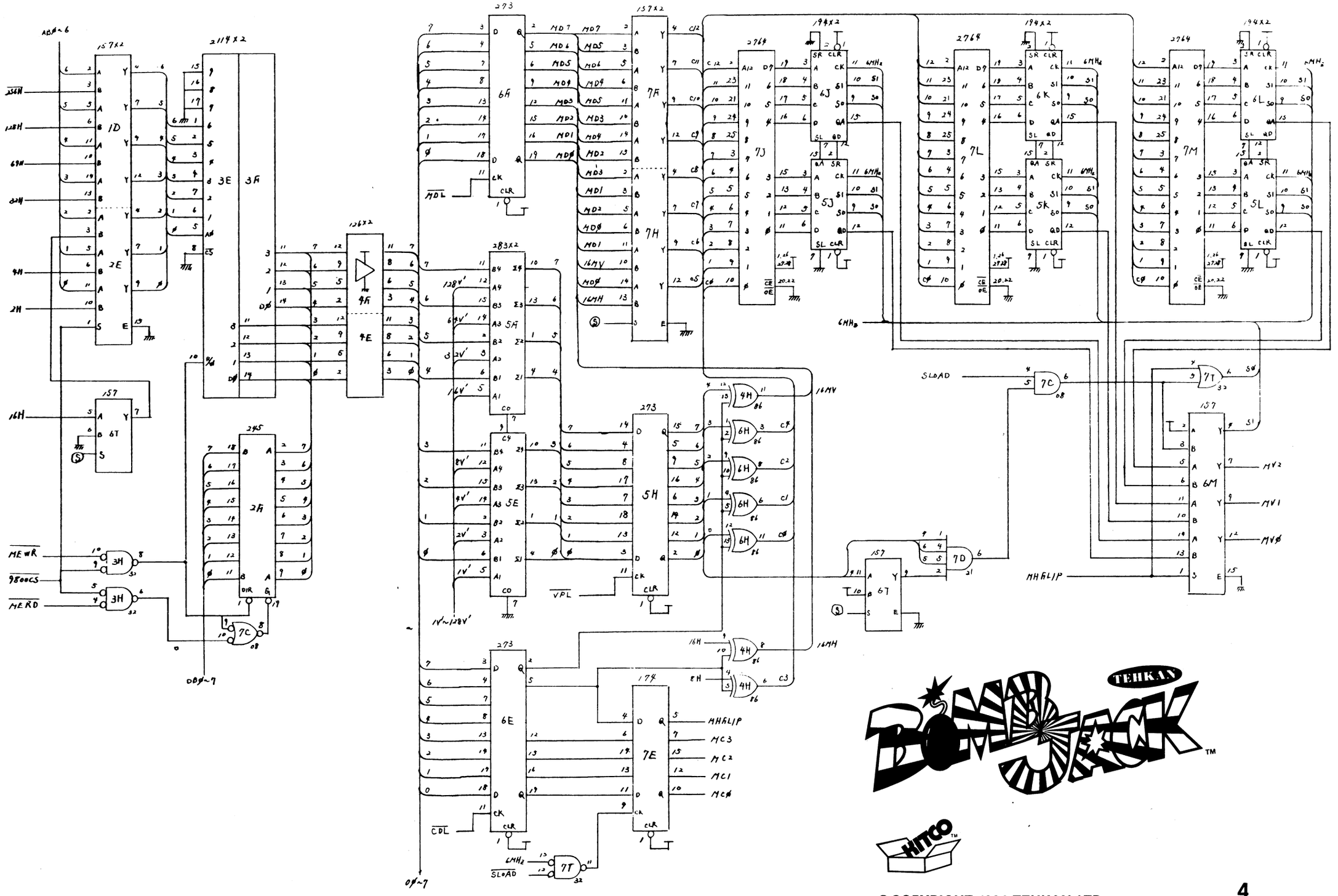

©COPYRIGHT 1984 TEHKAN LTD.

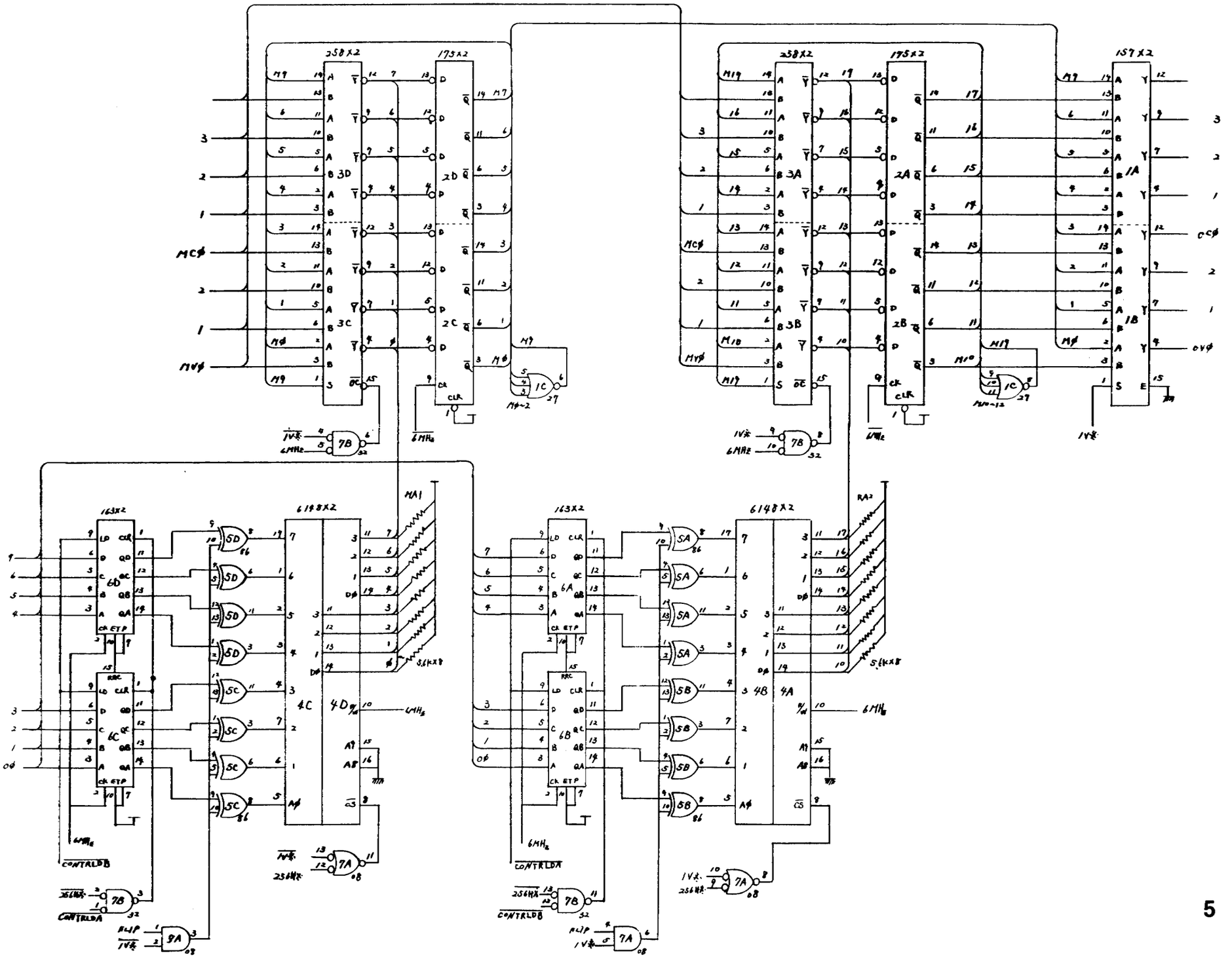
258X2
175X2
157X2
163X2
6148X2
3D
2D
3C
2C
3A
2A
3B
2B
1A
1B
6D
6C
6A
6B
4C
4D
4B
4A
MA1
RA2
CONTRLDB
CONTRLDA
FLIP
6MHz
256Hz
5.6KX8

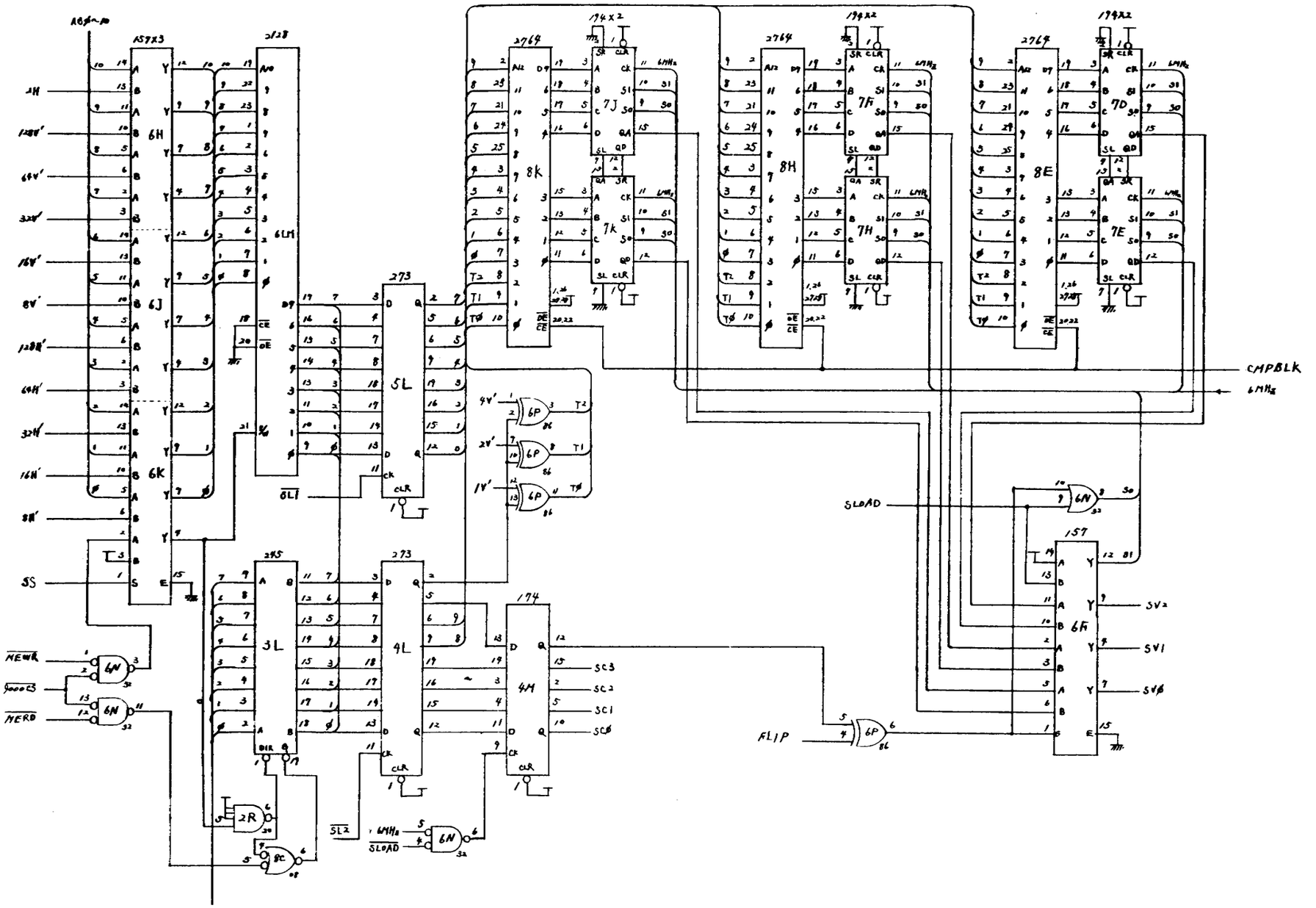

157X3
2128
2764
194X2
273
245
174
157
6H
6J
6K
6LM
8K
7J
7K
8H
7F
7H
8E
7D
7E
5L
3L
4L
4M
6F
6P
6N
2R
8C
CMPBLK
6MHz
SLOAD
FLIP
SS
SC3
SC2
SC1
SC0
SV2
SV1
SV0

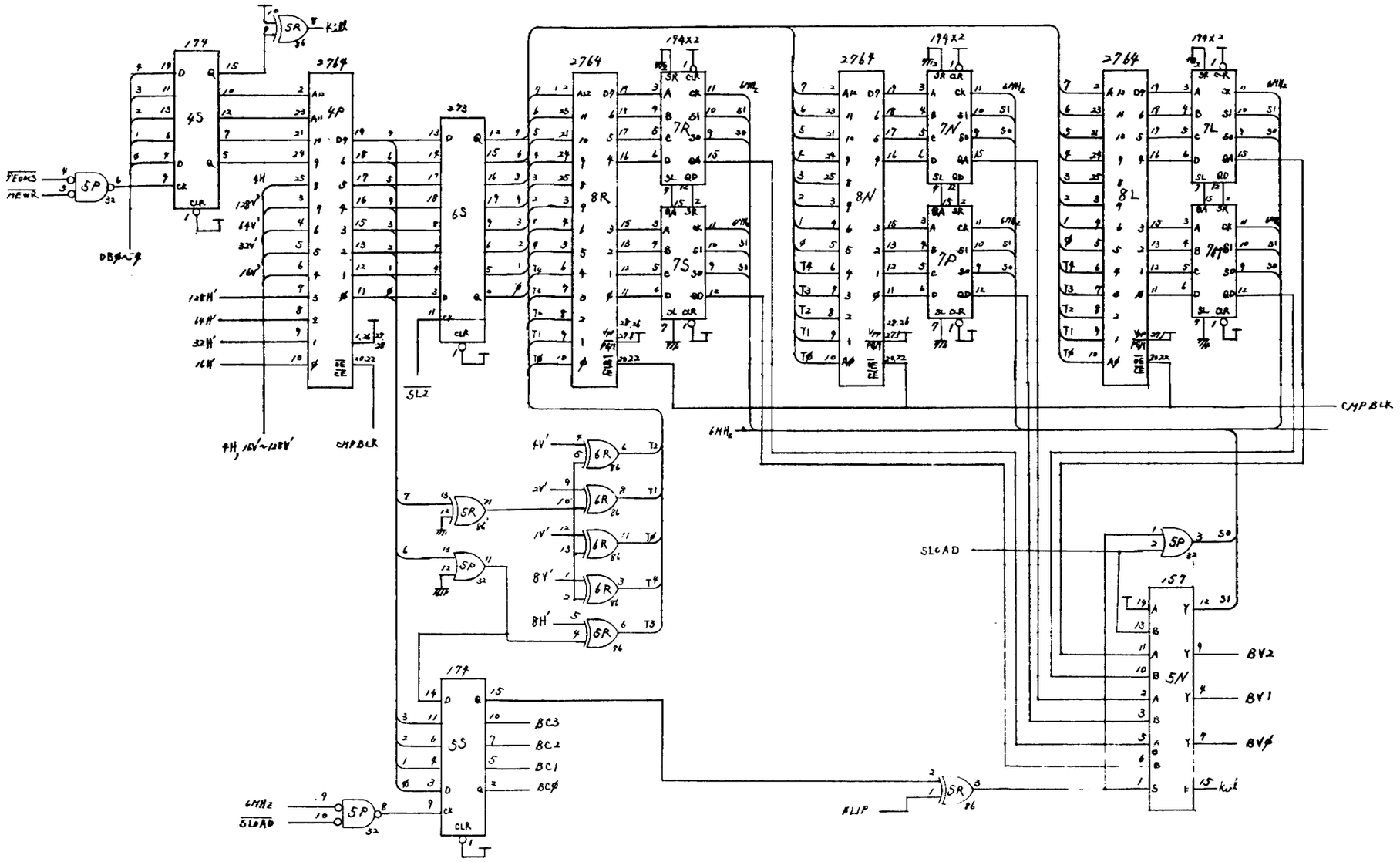

174
4S
2764
4P
273
6S
2764
8R
194X2
7R
7S
2764
8N
194X2
7N
7P
2764
8L
194X2
7L
7M
157
5N
174
5S
5P
5R
6R
CMPBLK
SLOAD
FLIP
BV2
BV1
BVØ
BC3
BC2
BC1
BCØ
6MHz
SL2

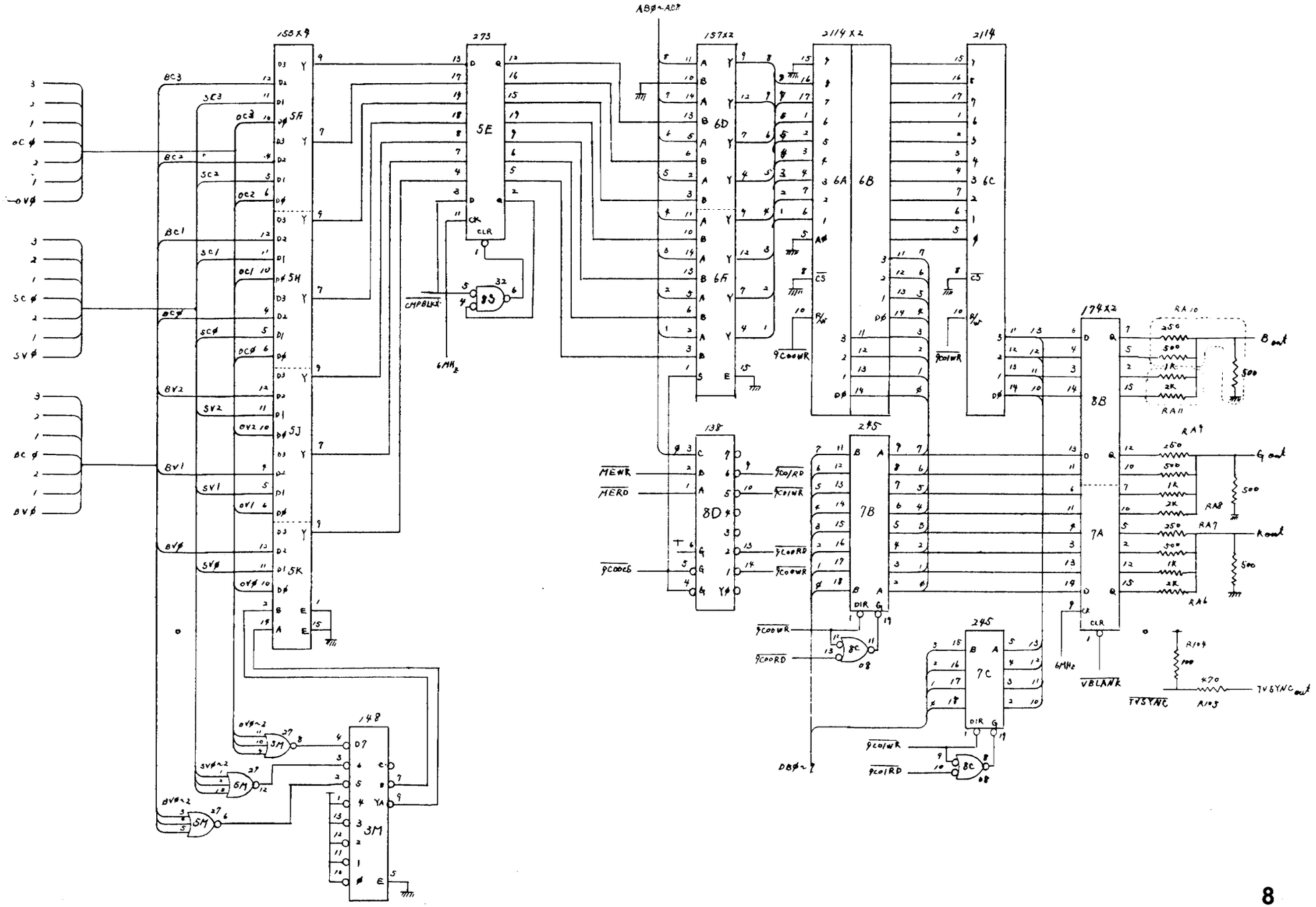

158X9
273
157X2
2114X2
2114
174X2
138
245
148
5A
5H
5J
5K
5E
6D
6F
6A
6B
6C
8B
7A
8D
7B
7C
3M
8S
8C
CMPBLKX
6MHz
MEWR
MERD
VBLANK
TVSYNC
TVSYNC out
B out
G out
R out

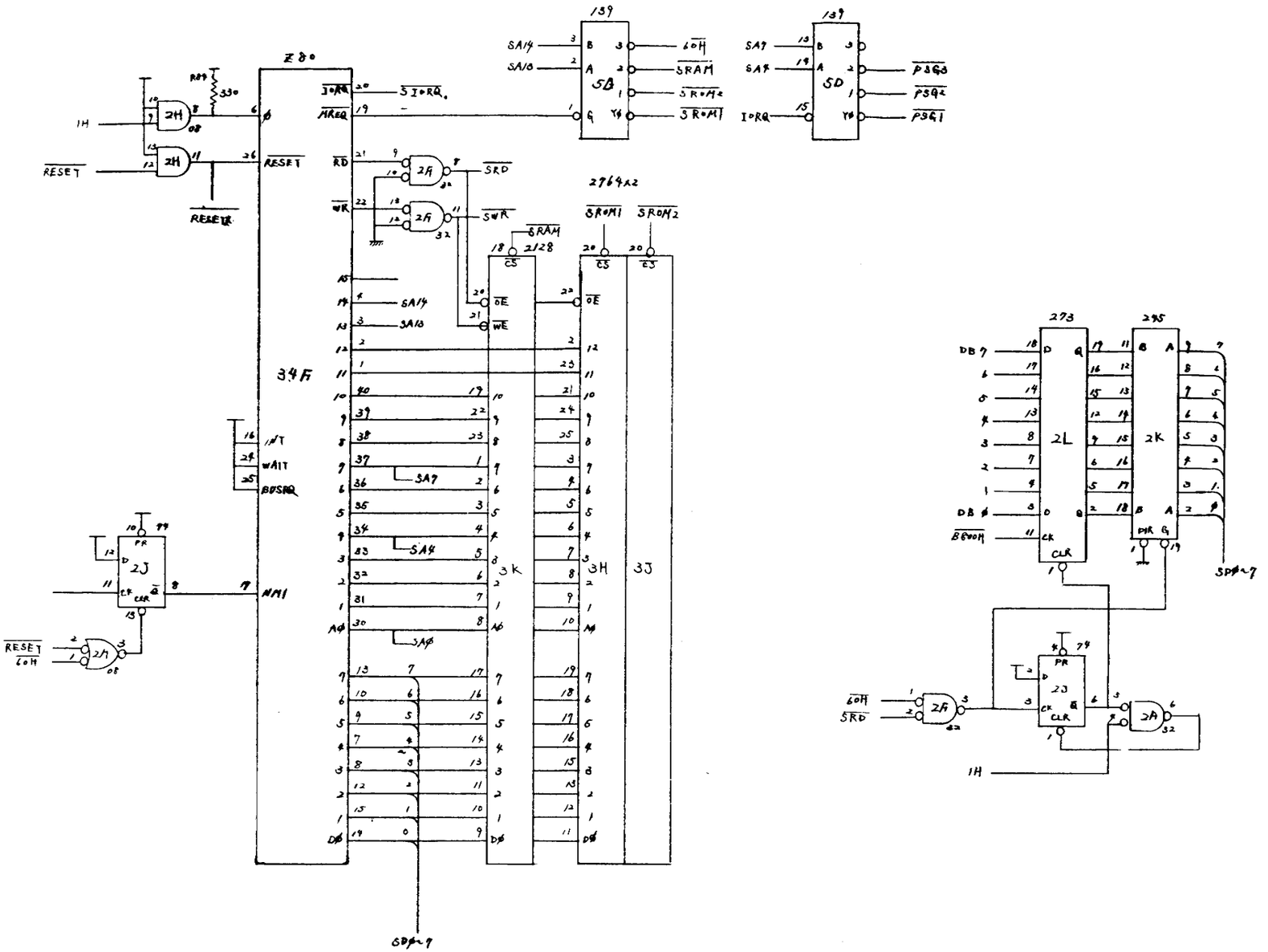
Z80
34F
139
5B
5D
2764x2
2128
3K
3H
3J
2J
2L
2K
273
295
2H
2F
2A
1H
RESET
SA14
SA13
SA7
SA4
SA0
SD0~7
SRAM
SROM1
SROM2
SRD
SWR
SIORQ
PSG1
PSG2
PSG3
DB7
DB0
BB00H
NM1
WAIT
BUSRQ
INT
IORQ
MREQ
RD
WR
CS
OE
WE
CLR
PR
CK
D
Q
A
B
Y0
G
R84
330

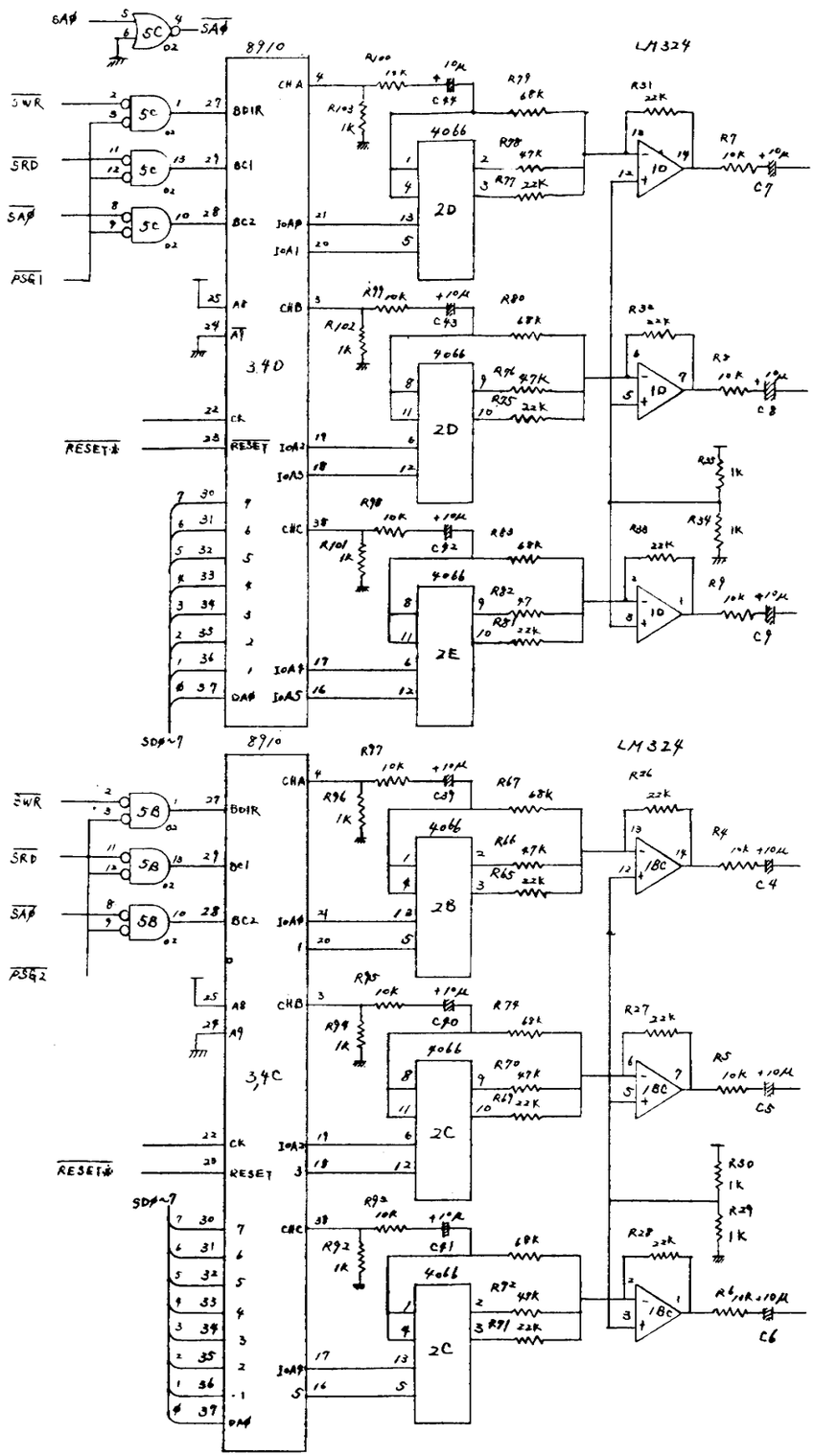
8910
LM324
3.4D
3.4C
4066
2D
2E
2C
1D
1BC
SWR
SRD
SAØ
PSG1
PSG2
RESET
SDØ~7

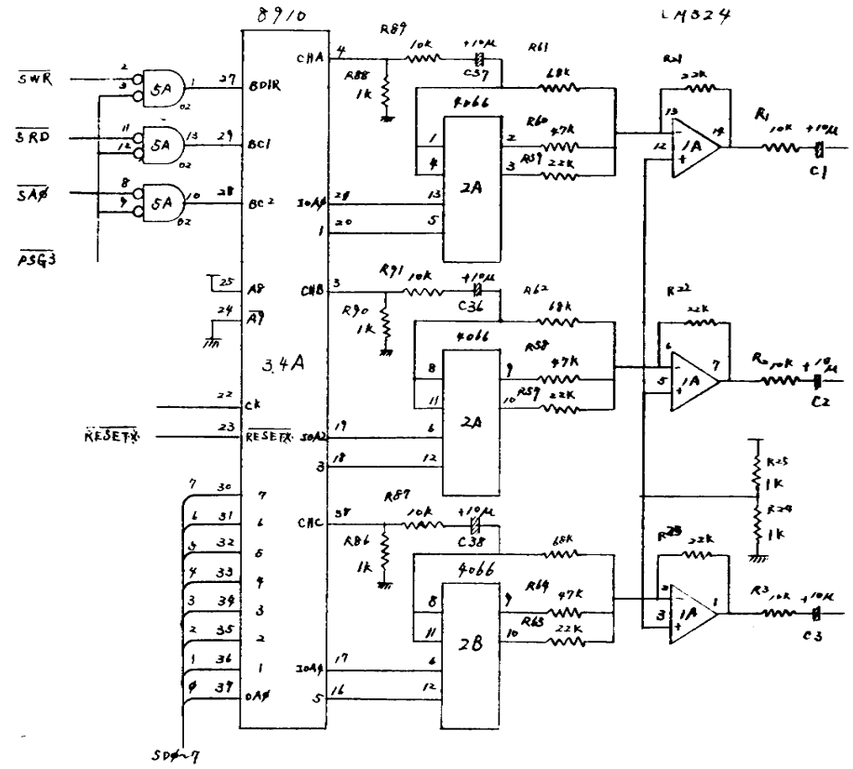
8910
LM324
3.4A
4066
2A
2B
1A
SWR
SRD
SAØ
PSG3
RESET
SDØ~7

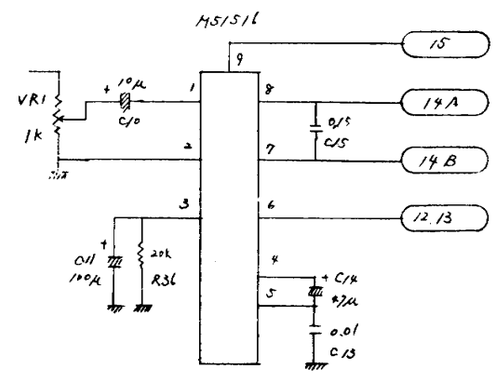
M51516
15
14A
14B
12.13
VR1
1k
C10
C15
C11
R36
C14
C13