SOLAR QUEST

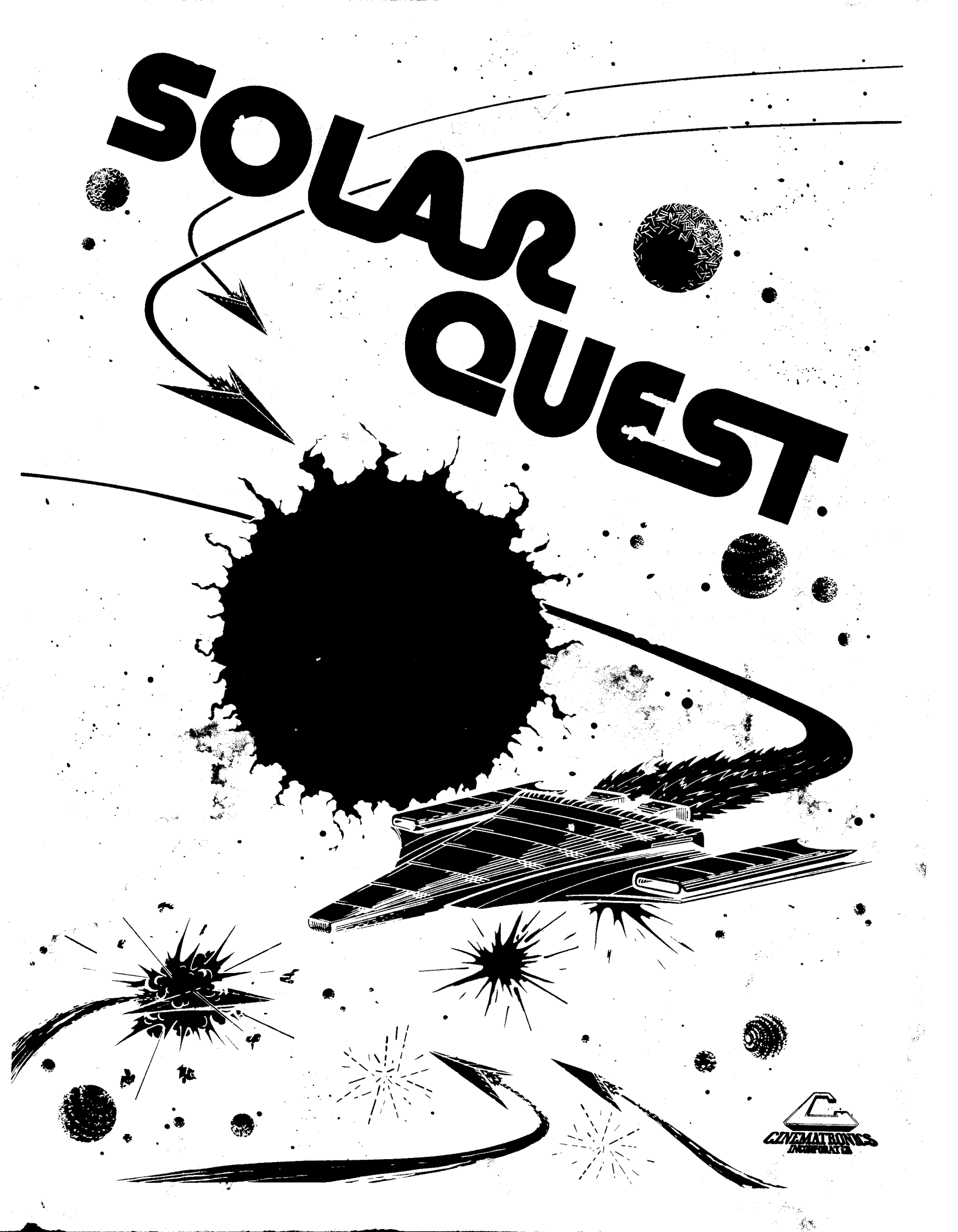

CINEMATRONICS INCORPORATED

OPERATION AND MAINTENANCE MANUAL

CINEMATRONICS, INC.
1841 FRIENDSHIP DRIVE
EL CAJON, CA 92020
(714) 562-7000

TELEX: CINEMAT ELCJ 697891

CALL TOLL FREE: 800 854-2666

IN CALIFORNIA CALL: 714-562-7000

SALES: 8-5 (PST) WEEKDAYS

SERVICE: 8-5 (PST) WEEKDAYS

Copyright 1981
All Rights Reserved

CINEMATRONICS INC.
SOLAR QUEST

WARNING:

This equipment generates, uses, and can radiate radio frequency energy and, if not installed and used in accordance with the instruction's manual, may cause interference to radio communication. As temporarily permitted by regulation it has not been tested for compliance persuant to Subpart J of part 15 of FCC rules, which is designed to provide reasonable protection against such interference. Operation of this equipment in a residential area is likely to cause interference in which case the user at his own expense will be required to take whatever measures may be required to correct the interference.

TABLE OF CONTENTS

Section	Title	Page
	PURPOSE AND LIMITATIONS OF THIS MANUAL	i
	WARRANTY	ii
	CUSTOMER SERVICE PROCEDURES FOR AUTHORIZED DISTRIBUTORS	iii

PART ONE

Information for Operators

Section	Title	Page
1	HOW TO PLAY SOLAR QUEST	1-1
2	RECEIVING AND INSTALLING SOLAR QUEST	2-1
3	GENERAL INFORMATION AND PERIODIC MAINTENANCE	3-1
4	OPERATOR'S GUIDE TO TROUBLESHOOTING	4-1

PART TWO

Information for Technicians

Section	Title	Page
5	VECTORY THEORY	5-1
6	THEORY OF OPERATION	6-1
	A. Monitor	
	B. CPU	
	C. Audio Board	
7	TROUBLESHOOTING	7-1
8	PARTS LIST	8-1

APPENDIX A

Assembly Drawings, Schematics, Wiring Diagrams

PURPOSE AND LIMITATIONS OF THIS MANUAL

This manual has 2 major purposes, and is correspondingly separated into 2 major parts.

Part One of the manual contains information operators need to know. It has been written to tell people who have little or no technical knowledge what they should know about this game, without getting technical.

Part Two of this manual is designed to help the qualified technician understand the functions of the various circuits in the game, and quickly troubleshoot any problems. If you need further assistance, please call Cinematronics' Customer Service Department at the toll free number.

THIS MANUAL DOES NOT REPLACE TECHNICAL EXPERTISE. SHOULD OUT-OF-WARRANTY REPAIR BE NECESSARY, WE SUGGEST THE OPERATOR PROTECT HIS/HER INVESTMENT BY HIRING AN EXPERIENCED, COMPETENT TECHNICIAN (PREFERABLY WITH SOME KNOWLEDGE OF THE VECTORBEAM TM* MONITOR). WE HAVE SEEN MANY EXAMPLES COME INTO THE FACTORY OF INCOMPETENT REPAIR CREATING MANY MORE PROBLEMS THAN ORIGINALLY EXISTED. ONE COMMON FAULT IS INCORRECT SUBSTITUTION OF PARTS. ANOTHER IS DAMAGED FOIL TRACES ON PC BOARDS. REPAIRING BROKEN FOIL IS TIME CONSUMING AND THEREFORE COSTLY.

WARRANTY

Cinematronics, Inc. warrants the goods to be free from defects in material and workmanship under normal use and service for a period of ninety (90) days from the date of shipment from factory. Cinematronics makes no representation or warranties concerning the goods whether express or implied by operation of law or otherwise, including those of merchantability or fitness for any particular purpose, or with respect of patent infringement, except as may be specifically made herein. Cinematronics limits its warranty obligations herein to the repair or replacement of such parts which have been returned to Cinematronics' plant at purchaser's expense and which examination shall disclose to Cinematronics' satisfaction to have been so defective and to the shipment of such repaired or replacement parts to the purchaser F.O.B. the shipping point.

This warranty does not apply to any Cinematronics product which has been altered or repaired by unauthorized personnel or service facilities or any products which have had the unit serial number altered or removed.

Upon acceptance of the goods, the purchaser agrees to assume all liability for damages and/or bodily injury by the purchaser or any other person and to hold Cinematronics, Inc. harmless from liability or claims arising from the use of the goods by any person. Purchaser further agrees to indemnify Cinematronics, Inc. from any liability, claim, cause of action or litigation resulting from the use or misuse of the goods by any person.

Parts returned for warranty service must be packaged so that no damage is incurred during the shipment. Full documentation and instructions must accompany returned parts. Parts must be shipped prepaid to:

Cinematronics, Inc.
1841 Friendship Drive
El Cajon, CA 92020

CUSTOMER SERVICE PROCEDURES

FOR AUTHORIZED CINEMATRONICS' DISTRIBUTORS

It is the desire of Cinematronics, Inc., to provide efficient and courteous service should the need arise. We have a fully staffed Customer Service Department and encourage you to call our toll free number: 800-854-2666 for technical assistance between the hours of 8:00 A.M. and 5:00 P.M., California time, Monday through Friday.

In order to provide the very best service possible, the following procedure for ordering or returning parts must be followed:

1. All equipment ordered from Customer Service, whether in or out of Warranty, must be placed with a Distributor's purchase order, either by mail or verbally by telephone.

2. Advance replacement items may be obtained only during the term of the Warranty and when such items are available, using the same procedure as when ordering parts. When ordering a PCB, please include with your order the game serial number and the number of the PCB you wish replaced.

3. All items received as advance replacements will, after a period of thirty (30) days, become the property of the Distributor, with applicable charges applied in the event Customer Service has not received the defective item against which the advance replacement was made.

4. The Distributor must call this facility for an RMA number prior to returning any item. Please be prepared to provide us with the game serial number and the PCB number when requesting an RMA.

5. In all situations covered above, and in all other situations, the Warranty offered by Cinematronics, Inc., is applicable and should be fully understood.

6. Parts returned for service must be packaged so that no damage is incurred during the shipment. Cartons without a prominently displayed RMA number will not be accepted. Full documentation including game serial number, PCB number on outside of package, and reason for return must accompany parts. Ship prepaid to:

Cinematronics, Inc.
Customer Service Department
1841 Friendship Drive
El Cajon, CA 92020

800-854-2666 714-562-7000

PART ONE

Information for Operators

SECTION 1

HOW TO PLAY
SOLAR QUEST

GAME LAYOUT

In the center of the screen is a sun. Any space ships or ships' fire coming in contact with the sun are destroyed. The sun exerts an increasing gravitational pull as play progresses.

A player controlled space ship is randomly located on the screen. The space ship's movement is controlled by rotate right, rotate left, and thrust buttons. For quick escapes, the space ship can be thrust into hyperspace, causing the ship to disappear and then reappear in a different location.

The space ship possesses two weapons. The first weapon consists of shots fired by pressing the fire button. These shots will destroy any alien ships they strike, but will disintegrate if they do not hit any targets. The second weapon is a nuke which is launched by pressing the nuke button. The nuke will continue to travel across the screen until either it strikes a target or the player detonates the nuke by pressing the nuke button a second time. The nuke will destroy all alien ships within a limited radius of the explosion.

At the top of the screen is a display showing the player's score, the number of ships remaining, and the number of nukes a player has available.

GAME PLAY

The game consists of different phases. Each phase begins with several alien ships appearing from random points along the edge of the screen. The number of the alien ships is determined by the phase, with a maximum of eight ships for any single type of alien ship in a phase.

The alien ships move across the screen in a random pattern. After a predetermined time, dependent upon the phase, the alien ships will begin to chase the player's space ship. The player must shoot the alien ships before his ship is rammed by an alien ship. In later phases, the alien ships can shoot at the player's space ship as well as ram it.

Any alien ship that is destroyed by the player will leave a survivor. The player can either capture or kill the survivor. Survivors cannot be killed with nukes. If the survivor is neither captured nor killed, it will begin to drift towards the sun. Survivors disappear when they come in contact with the sun.

If the player does not shoot any alien ships, one or two ghost ships will appear and begin to chase the player's space ship. The ghost ship will shoot at the player's space ship during any phase. The length of time it takes for the ghost ships to appear shortens with each phase, until at least one is always present. A ghost ship will not leave a survivor when it is destroyed.

During a phase, seven different types of alien ships will appear. It is possible for several types of alien ships to be on the screen at one time. A phase is completed after all the alien ships have been destroyed or a specific amount of time has elapsed.

A player must be careful when using hyperspace. Excessive use will cause hyperspace to lock-out for a short period, making a player's space ship more vulnerable. A player's space ship cannot be destroyed in hyperspace.

As play continues, each phase becomes successively more difficult; the number of alien ships increases, the length of time before the alien ships attack shortens, and the alien ships firing capability activates. When a player's space ship is destroyed, play resumes at the same point. The game ends when all of a player's space ships are destroyed.

One and two player options are available. In the two player mode, players alternate until all their ships are destroyed, If one player receives more extra ships than another, he will be allowed to play the extra ships even though his opponent's game is over.

SECTION 2

RECEIVING AND INSTALLING SOLAR QUEST

RECEIVING INSPECTION

Your game was shipped in ready-to-play condition. However, after removal of the shipping carton, a brief visual examination is suggested.

Naturally, you'll want to make note of any physical damage to the game cabinet and its external components for freight claim purposes. Considering the quality of the shipping carton, any damage to the exterior would indicate possible interior damage as well.

The interior of the game should also undergo a brief examination for: loose mounting hardware (check to be sure that the major components are still securely mounted); disconnected or loose wires, cables or harnesses; electronic devices loose in their sockets; etc.

At this time the game serial number should be logged. Remember that the game serial number will be required if you need service from your distributor. Please complete the postage-free reply card and mail immediately.

ELECTRICAL REQUIREMENTS

Unless specified otherwise, your game was shipped to operate at 115 VAC, 50/60 Hz.

A good earth ground is essential for the proper operation of this game or for that matter any electronic device. Problems with instability and erratic operation of computer-type devices can usually be traced to an ineffective ground system. Therefore, plug the game into a properly wired 3 prong outlet. If a 3 prong to a 2 prong AC adaptor must be used, an alternate method of grounding the third prong must be used.

INITIAL ADJUSTMENTS

NOTE

When the game is connected to AC power, one of the game sounds may be heard. This is normal.

The audio level (volume) can be easily adjusted and THIS IS ACHIEVED BY ROTATION OF THE VOLUME POT LOCATED ON THE COIN DOOR. The audio level should compete with other machines "on the floor" to maximize play time.

Display brightness is another easy adjustment. Keep the brightness at the correct level for appeal.

OPERATOR OPTIONS

The option switches allow you to select how many ships per game, how many coins per credit, and a test pattern for the Vectorbeam monitor. The option switch is located on the logic board. The following table will assist you with your selections.

SCORING AND BONUSES

TYPE	POINTS SCORED
1st Alien	250
2nd Alien	300
3rd Alien	350
4th Alien	400
5th Alien	450
6th Alien	500
7th Alien	750
Ghost	2500
Survivor Shot	250
Survivor Captured	1000

An extra nuke is awarded every 10,000 points. An extra space ship is awarded after capturing a specified number of survivors.

GAME FEATURES

1. The number of alien ships for any type increases from four phase one to eight in phase five.

2. The sun's gravity increases with each phase, starting in phase five.

3. The speed of the alien ships increases with each phase.

4. Alien ships' firing capability becomes activated in phases five through eleven. The seventh type of alien ship receives firing capability in phase five, the sixth type in phase six, the fifth type in phase seven, and so on, until all the alien ships have firing capability in phase eleven.

5. The ghost ships will appear in a shorter amount of time each phase, until at least one is always present.

6. The number of captured survivors needed to receive an extra space ship is adjustable, either twenty-five or forty.

7. The number of ships per credit is adjustable, either three or five.

8. The number of credits per coin is adjustable.

SECTION 3

GENERAL INFORMATION AND PERIODIC MAINTENANCE

Your Cinematronics game is designed much the same as conventional video games. The major exception is the use of an alternate means of visual display . . . the patented Vectorbeam tm* monitoring system. However, the game is built of the same basic building blocks as any other video game.

The Power Supply provides all the necessary voltages for the CPU board, audio board, Vectorbeam monitor and fluorescent light. As you look in the back of the cabinet, it is located on the lower right side of the cabinet. The power supply has two circuit breakers, and a 3 ampere slo-blo fuse. If one circuit breaker trips, the other breaker will soon follow. Always unplug the game before replacing the fuse or resetting the circuit breakers. If you need to replace the fuse use only a 3 amp. slo-blo fuse. The power supply also has a line voltage select switch that must be set to match the voltage in your area. There is also an adjustment for the +5 volt section. DO NOT ADJUST unless you use a volt meter and follow the procedure in Section 6. If needed, this power supply is directly interchangeable with the power supplies used in previous Cinematronics games.

The Central Processing Unit (CPU) is the "brain" of the game. As you look in the back of the cabinet it is the large PC (printed circuit) board on the left side. It "senses" when a coin is dropped in the coin slot, operates the coin meter, and gives credit. It then "reads" what is happening at the operator controls, interprets and computes to make the game play according to what buttons the player pushes. It tells the Vectorbeam monitor what to draw on the screen, and it tells the audio board when to make the appropriate sound effect. The CPU has a red LED (light-emitting diode), near the Molex power plug. This LED normally flashes once when power is turned on, then stays off. More on this in Section 6.

The Audio Board generates all the sound effects for the game and powers the loudspeaker. As you look in the back of the cabinet, it is the smaller PC board on the left side, just below the CPU.

The Vectorbeam tm* Monitor is the picture tube and associated "Monitor Board." It draws pictures on the picture tube screen according to the instructions it receives from the CPU. If it does not receive correct data from the CPU, it will pop the circuit breakers. The only operator adjustment here is the brightness control. (See display P.C.B. Connectors and Adjustments.)

The Vectorbeam tm* Monitor is a completely different system from the standard raster-type monitor. Two advantages to this monitor are:

1. circuitry is simplied, and
2. ability to draw fine detail in the picture far surpasses conventional monitors, adding interest to the game.

If your monitor should need repair in the future, the technician should be familiar with the Vectorbeam monitor, because it is so different from the conventional raster system.

Interconnecting Cables are of 2 types: The Main Wiring Harness, and the Ribbon Connectors.

The Main Wiring Harness carries power from the power supply to the CPU, audio board, and monitor. It connects to each unit through the Molex plugs. The Molex plugs are built so they can only plug in the right way. NEVER CONNECT OR DISCONNECT THE MOLEX POWER PLUGS UNLESS THE GAME IS UNPLUGGED.

The Ribbon Connectors carry data to and from the CPU. Since they can plug in two different ways, care should be taken to plug them in correctly. For the CPU, the ribbons are plugged in correctly if the ribbon is naturally directed away from the board. (See Universal Bench Test Configuration, Section 7.) The ribbon at the monitor should also be directed away from the board. (See Universal Bench Test Configuration, pg. 7-3.) The audio board is different: the ribbon should go up across the audio board. (See Universal Bench Test Configuration, Section 7.)

SOLAR QUEST OPTION SWITCHES
LOCATED ON LOGIC BOARD
AT POSITION E-2

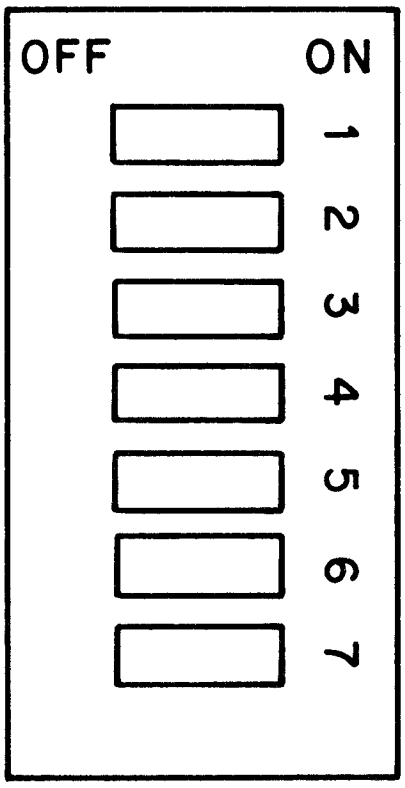

NUMBER OF CAPTURES ON=40
FOR EXTRA SHIP OFF=25

CREDITS PER COIN
SEE TABLE TWO

SHIPS PER GAME
SEE TABLE ONE

SWITCH TO "ON" FOR FREE PLAY

SWITCH TO "OFF" FOR DIAGNOSTIC MODE

TABLE ONE

SWITCH 4	SWITCH 5	SHIPS PER GAME
OFF	OFF	2
OFF	ON	3
ON	OFF	4
ON	ON	5

TABLE TWO

SWITCH 2	SWITCH 3	CREDITS PER COIN
OFF	OFF	1/1
OFF	ON	1/2
ON	OFF	3/2
ON	ON	3/4

DIAGNOSTIC MODE

1. Place switch 7 in the "off" position. This will put you into the Diagnostic Mode.
2. One of 3 tests will appear on the screen:
   - Alignment Pattern
   - Intensity Test
   - Game Status

To go to the next test, press the fire button on the Control Panel.

Alignment Pattern:

The correct pattern should be a LMD that fills the entire area of the screen.

Intensity Test:

The correct pattern should be a series of vertical lines going from max intensity on one end through minimum intensity at the other end. There are 256 lines on the display with 4 lines per intensity level with 64 levels totals.

Game Status:

The correct display is as follows:

- Line #1 - #ships per credit
- Line #2 - coinage option selects
- Line #3 - daily credits
- Line #4 - revision level

DIFFICULTY LEVEL SETTING

PADS 12, 13, 14 DETERMINE
THE DIFFICULTY AS FOLLOWING:

LEVEL	#12	#13	#14
1	OUT	OUT	OUT
2	IN	OUT	OUT
3	OUT	IN	OUT
4	IN	IN	OUT
5	OUT	OUT	IN
6	IN	OUT	IN
7	OUT	IN	IN
8	IN	IN	IN

("IN" INDICATES A JUMPER TO GROUND
TO THE APPROPRIATE PAD)

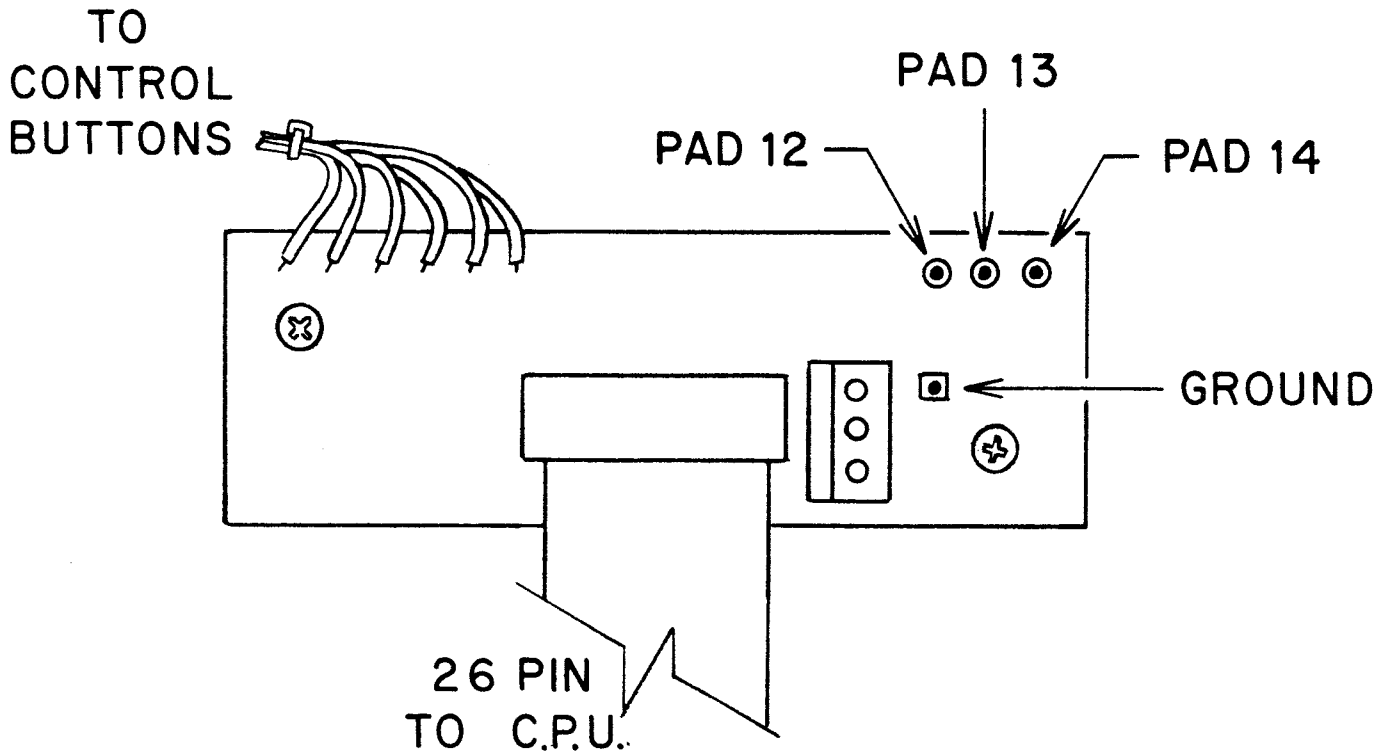

DIFFICULTY LEVEL SETTING
(CIRCUIT BOARD LOCATED BENEATH PLAYER CONTROL PANEL)

SECTION 4

OPERATOR'S GUIDE TO TROUBLESHOOTING

O.K. - this is where we get technical on you - but don't panic! We'll keep this as simple as possible so you can figure out which board to send out for repair. For some of the steps in this section you will need a simple VOM, and know how to use it.

Here are two important procedures we will refer back to in this section:

Checking the LED:

Whenever there is a problem with the game, a good place to check first is the LED (light-emitting diode) on the CPU board near the Molex power plug. This LED indicates whether most of the CPU circuit is working. When everything works right, here's what happens: Power to the game is turned on, the LED flashes on, then stays off. If the LED is flickering or on continuously, there is a problem with the CPU or the +5 volt supply. Check +5 volts on the logic board (follow procedures in this section). If the +5 is O.K., have CPU repaired.

Checking the +5 Volt Supply:

To check the +5 volts, you need a voltmeter. Turn power on in the game. Notice on the upper corner of the logic board nearest you is a little pin marked gnd. This is a great place to put the negative probe of the voltmeter. Near this pin in position T13 (see CPU layout, in appendix) is a 20 pin IC marked 74LS377. Ignore the other numbers on this chip. We can measure the +5 volt supply at pin 20. Pin 20 is the bottom pin on the far side of the chip. Put your positive probe there, without touching any other pins, and you should get a reading. Anything between +4.8 volts and +5.1 volts is o.k., otherwise, adjust the voltage.

The adjustment is located on the power supply and it is the only screwdriver adjustment on the power supply. Adjust slowly WHILE READING THE VOLTAGE. Too much voltage will destroy IC's fast. If voltage cannot be adjusted into the correct range (+4.8 – +5.1 volts), repair power supply.

The following is a guide compiled from experience. It cannot be right 100% of the time:

SYMPTOM	WHAT TO DO
Circuit breakers trip	1. Unplug game. Unplug Molex power plug from monitor and reset breakers. Turn POWER ON. If breakers trip: POWER OFF, see 2. If breakers don't trip: Coin-up game and "play" it. Are all sound effects normal? Yes - repair monitor. No - Problem is probably in CPU or power supply. Check LED on CPU. Check +5 volts on CPU (see procedure) If +5 volts is good, repair CPU. 2. Unplug Molex power connector from audio board, reset breakers and turn POWER ON. If breakers trip: Problem is in coin meter circuit or call factory for help. If breakers don't trip: Repair audio board. POWER OFF, reconnect molex plug to monitor. Turn power on to see if there is a good picture. If the picture is bad, problem is probably in the monitor. If breakers trip: Check LED and +5 volt supply. If LED and +5 volts is O.K., problem is probably in monitor.

PART TWO

Information for Technicians

SECTION 5

VECTOR THEORY

In order to understand the basic concept behind a vector generated display, it is important to have a basic knowledge of vector theory.

In the vector display system, there are no horizontal and vertical lines (no sweep) or sync. A line generated using a vector system is shown in Figure 5-1.

A line is drawn by programming a beginning and ending point of the line to be drawn, and forcing the cathode beam to travel between these two points, illuminating the entire path on the screen of the CRT. The angle of the line, the position of the line, and the length of the line are determined simultaneously, and simply, by selecting the proper voltage levels for the beginning and ending points of the line.

This is accomplished by the two twelve-bit codes (words) applied to the DAC-80s on the display board. The DAC-80 will produce a different voltage level at its output for each possible combination of input bits (of which there are 4096 possibilities for a 12 bit word.)

It is also important to remember the function of the LF 13331 analog switch and its output RC network. Because we are dealing with reactive components in C101 and C201 on the display board the charging voltages found are non-linear by nature. (See figure 5-2).

Therefore, when a line appears on the CRT, it is actually only part of the entire path taken between the beginning and ending points of the vector (C-D). The section of A-B is chosen as the most linear portion of the charge curve, and is illuminated.

Sections C-A and B-D are blanked at the cathode and section A-B illuminated by controlling IC7 (7406) on the display board. These calculations are all performed on the CPU logic board.

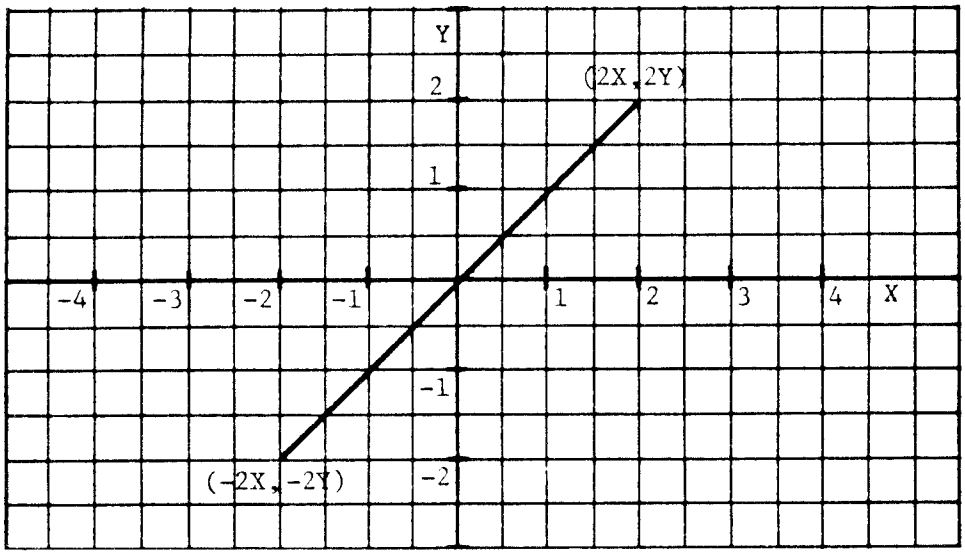

Figure 5-1. Line using Vector System

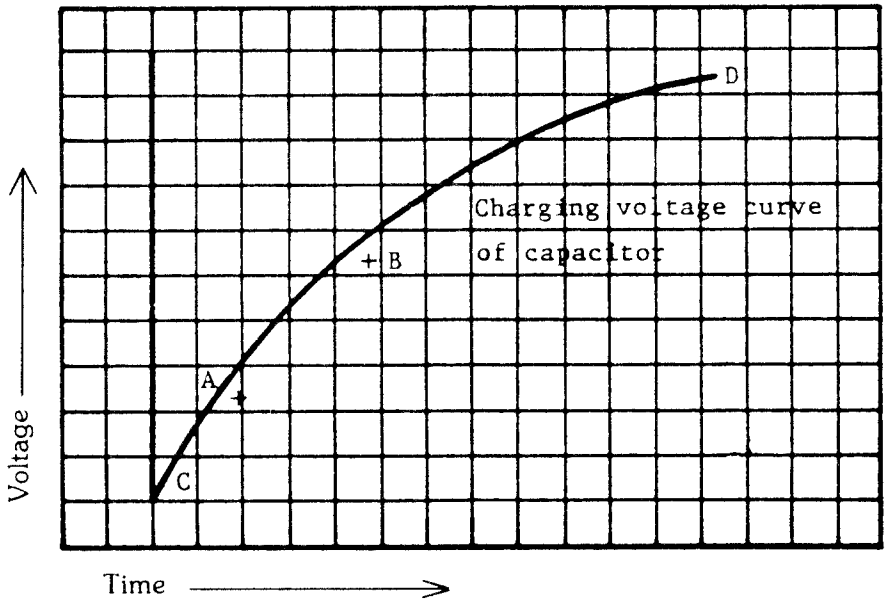

Figure 5-2. Non-linear Charging Voltages

When a line appears on the CRT, it is actually only part (section A-B), of the entire path taken between the beginning and ending points of the vector (section C-D). Section A-B is chosen as the most linear portion of the charge curve, and illuminated.

SECTION 6

THEORY OF OPERATION

GENERAL DESCRIPTION

This section describes the principles of operation of the major circuit functions of the Cinematronics Video Game. The system's general functional description is followed by detailed circuit schematics which are included as Appendix A. The schematics used in this manual are similar in nature to those used by most industrial electronic firms.

A. MONITOR

The Vectorbeam tm* Monitor is unlike the conventional TV monitor in that it displays vectors (lines) generated from X-Y coordinates received from the logic board. The horizontal points are X (width) and the vertical points are Y (height). The X and Y logic signals originate from the logic board.

The Vectorbeam tm* Monitor circuitry is so different from a raster scan monitor, it is useless to try to troubleshoot it using raster T.V. theory. The Vectorbeam tm* Monitor has no horizontal oscillator, no vertical oscillator, no AFC, no sync circuits, and no video amplifiers. How, then, does it work?

The Vectorbeam tm* Monitor can be divided into 4 main sections: voltage regulators; deflection circuits; video high voltage module; and brightness circuit (cathode drive).

There are three voltage regulators on the monitor board: +15v, -15v, +5v. Note that these are IC's, not transistors. The plus and minus 15 volt regulators supply both DAC-80's, the LF13331 analog switch, and the TL081 op amps. The +5 volt regulator supplies both DAC-80's and the 7406 (IC7). It takes little time and is well worthwhile to check all 3 regulator outputs every time the monitor is serviced.

Drawing a line requires two separate steps.

STEP 1. Digital information, in the form of a 12 bit word is applied to the input (pins 1 thru 12) of the DAC-80. Pin 1 receives the most significant bit, and pin 12 the least significant. The DAC 80 converts the digital word into an analog voltage which is outputted on pin 15. This voltage can swing between +5 volts, depending on the input word. The output of pin 15 then goes through a current limiting resistor R130 to the inputs of the analog switch IC1. (Pin 18 of the DAC-80 is an input for feedback). Now the CPU sends out an Initial Position pulse, closing the appropriate "switch" (actually a J-FET), to let the analog voltage out pin 10. C101 charges up immediately, and the analog voltage is amplified by IC 102 and the transistorized section Q101 thru Q111, causing the yoke to deflect the cathode beam to where we want the line to begin - the Initial Position.

STEP 2. Another 12 bit word is fed into the DAC-80. This word determines where the end of the line we are drawing will be. The DAC-80 again converts the digital word into an analog voltage that goes out pin 15 and into the analog switch IC1. Now the CPU sends out a Line Drawing pulse, closing the appropriate "switch" to let the analog voltage out pin 15 of IC1. The combination of R103, R102, and C101 has a time constant that determines how quickly C101 can charge (or discharge) to the new analog voltage on pin 15 of IC1. By adjusting R102, we change the amount of time it takes for C101 to arrive at the new analog voltage on pin 15 of IC1. Thus R102 determines the line length in the vertical (Y) direction. If the second (Line Drawing) analog voltage (IC1 pin 15) is greater than the first (Initial Position), the line will be drawn downward. If the second voltage is smaller, the line will be drawn upward.

In the horizontal channel, if the second analog voltage is greater than the first, the line will be drawn to the left.

Op-amp IC102 serves a dual purpose: It acts as a buffer between the deflection amplifiers and the analog switch, as well as an "edge gain" amplifier.

At the output of IC102, there is a resistor diode network consisting of R105 to R110, and D101 to D104. This resistor diode network is used to compensate for the non-linear characteristics of the CRT near the edges of the screen. If this circuit were not used, any object displayed on the screen would increase in size as it moved closer to the edges of the screen. Potentionmeter R109 adjusts the height of the pictures.

From the wiper of R109, the signal proceedes to Q101, which is the first stage of deflection amplification. Q101 to Q111 form a typical modern direct-coupled power amplifier with differential pair input and full complementary output. The differential pair consists of Q101 and Q103. The base of Q103 is tied to the amplifier output through the yoke and R117, forming a negative feedback loop. Q101 and Q103 (differential pair) compare input signal and amplifier output, and correct for any differences caused by amplifier distortion and the reactance of the yoke. Q102 is the constant current source for the differential pair (Q101, Q103). Bias for Q102 must be kept steady so Q102 collector current is constant. D105, D106 and R113 accomplish biasing. Note D105, D106 are in parallel with the base - emitter junction of Q102 and R113. The voltage across Q102 B-E junction plus voltage across R113 will equal total voltage across D105, D106, and the two forward biased diodes determine this voltage at 1.2 volts. Since the voltage across the B-E junction of Q102 is 0.6 volts, that leaves 0.6 volts across R113. The voltage across R113 is held constant, so the current through it is constant (I = E ÷ R) at 3 ma. Thus Q102 collector current is held constant near 3 ma.

The output of the differential pair (Q101, Q103) is fed into the base of Q104. Q104 is a class A amplifier whose output feeds Q208 and Q209.

Q105 is another constant current source. D109, D110, D111 determine the bias current in Q108, Q109, Q110, Q111.

So the deflection signal has traveled to the base of Q108 and Q109, the driver transistors. If the signal happens to swing positive Q108 will turn on, turning on Q110 which drives current thru the yoke and deflects the electron beam down. If the signal swings negative, Q108 and Q110 turn off, Q109 and Q111 turn on, and the beam deflects upward.

If the signal amplitude is excessive Q110 or Q111 (also known as the output transistors) will conduct heavily. The excessive current will cause voltage to develop across R120 or R121, and Q106 or Q107 will turn on. When this happens, the signal is removed from the base of Q108, Q109. Q108 and Q110 or Q109 and Q111 are turned off by this action and are protected from burning up. So Q106 and Q107 are protection transistors, and during normal operation they are inactive.

Note that Q108, Q110 control deflection in the lower half of the CRT screen, while Q109, Q111 take care of the top half. In the horizontal (X) channel Q208, Q210 control the left half; Q209, Q211 control the right.

Because the amplifier is a direct coupled loop, it defies ordinary signal tracing as a means of troubleshooting. If the signal is wrong anywhere in the amplifier, it will be wrong throughout.

R122, R123, and C102 form a RC network, which compensates for any counter EMF that may develop by the expanding and collapsing of the deflection coil's electromagnetic field.

The video high voltage module operates off the +25v supply and generates three different voltages for three circuits. It generates 16KV for the CRT ultor voltage. It generates +400vdc for the CRT focus voltage. And it generates +90 volts for blanking the cathode. The +90v is well filtered and fed into the brightness circuit on one end of R111.

The brightness circuit controls the amount of current going from the CRT cathode to the phosphor screen. It does this by varying the voltage on the CRT cathode. It also incorporates protection circuitry to protect the phosphors from burns. The main components in the brightness circuit are IC7, Q1, Q2, Q3, Q6, Q7, Q8, and R111, the brightness control. There are only two levels of brightness used in this system, which I will refer to as Normal and HI. The brightness information comes from the 74LS32 in position J2 on the logic board, through the ribbon connector, and into IC7. Normal intensity data enters IC7-1, and HI intensity data enters IC7-3.

Normal intensity data then goes out IC7-2 and turns Q1 on-off. Q1 acts as an on-off switch connecting and disconnecting R7 to ground (thru Q2). Thus, when Q1 turns on, the CRT cathode voltage is lowered (assuming R111 is at a normal setting) and the beam is turned on. When Q1 turns off, CRT cathode voltage returns to +90 volts, and the beam is cut - off (no brightness on screen).

Hi intensity data goes out IC7-4 and turns Q3 on-off. Q3 collector is connected to R8 (10K) in parallel with R9 (2.2K), R10 (5.6K). When Q3 turns on there is a lower resistance path between CRT cathode and ground than there was when Q1 turned on. Thus CRT cathode voltage drops to a lower voltage, and more current flows to the phosphor screen, creating a higher brightness.

Note that when either Q1 or Q3 conducts, the only path to ground is through Q2. If Q2 is off, the CRT cathode voltage cannot change, and no picture can appear. This means Q2 is a master ON-OFF switch for the cathode beam, and is the means through which our protection circuits can turn the beam OFF.

The first protection circuit consists simply of an unfiltered full-wave rectified +25 volts from the power supply. This voltage is slightly filtered by C10 and fed through R6 to Q2, turning it on. When the game is unplugged, the +25 unfiltered dies immediately and the beam is cut off, preventing a bright spot on the screen.

The second protection circuit consists of Q6, Q7, and two sections of IC7. Part of this circuit turns off the beam if the -25 volts from the power supply is lost (breaker trips, or?). In the absence of -25 volts, IC7-9 goes high (pulled up via R20), and IC7-8 goes low, pulling the base of Q2 to ground and Q2 turns off.

The other part of the circuit protects against having the beam on too long (in case of CPU failure, etc.). The high going pulses coming out of IC7-2,4 that turn on Q1, Q3 also turn on Q6 via R22, R23. Q6 amplifies and inverts these pulses to high-going low. Pulses then go through another inverter, so at IC7-10 they are low going high (active high). The active highs here correspond to the times when the beam is on, and charge up C24. If the beam is on too long, C24 will charge up enough to turn on Q7, making Q7 collector and Q2 base go low and Q2 turns off. In normal operation C24 can discharge through IC7-10 when IC7-10 goes low.

Now, a paragraph about Q8. Q8 is the path through which IC7-2,4 receives its operating +5 volts. R19 and C23 form a time delay, so when power is first turned on it takes a while before Q8 turns on and +5 volts gets to IC7-2,4. Thus, all other circuits get a chance to stabilize before the beam is turned on.

R111 is the brightness potentiometer, which adjusts the amplitude of the negative pulses used for Normal and HI brightness.

B. MULTI-INTENSITY CIRCUIT BOARD

The MULTI-INTENSITY CIRCUIT BOARD which is located on the rear of the display chassis, allows lines to be drawn at any one of 64 different intensity levels.

CIRCUIT DESCRIPTION

MULTI-INTENSITY CIRCUIT BOARD is composed of 4 main circuits, they are: an INPUT LATCH, CLOCK CONDITIONING CIRCUIT, DIGITAL to ANALOG CONVETER (DAC) and BEAM ON/OFF SWITCH.

INPUT LATCH

The INPUT LATCH is an 8 bit latch U1, of which 6 bits are used. The inputs to U1 are fed from bits 45 thru 55 of the X-DAC. The clock input of the latch is tied to the output of the clock conditioning circuit U4-2.

CLOCK CONDITIONING CIRCUIT

The clock conditioning circuit is composed of 3 Schmidt-Trigger inverters, U4, one section of an open collector inverter U3, R9 and C1.

After valid data is present on the data inputs of U1, a high going strobe pulse is sent to U4-3 via J1-14. This strobe pulse is filtered by R9 and C1 such that strobe pulse "glitches," under 100 nsec, are ignored and valid strobe pulses of 600 nsec are fed to U1-11.

DIGITAL to ANALOG CONVETER (DAC)

The DAC is composed of U2, U5 pins 1-6, D1-D18, R1-R6, and Q1-Q6. Q1 handles the most significant bit and Q6, the least significant bit. Six similar current sink circuits are used to vary the amount of current drawn thru the 10k briteness pot on the display board. The amount of current drawn by each current sink is determined by the values of R1-R6. Note that R1-R6 are related by powers of 2. Note also that as more current is drawn through the 10k briteness pot the voltage on the pot wiper will decrease causing the beam on the CRT to become brighter.

A current sink will be turned on if it's respective driver, for instance U2-10, is high when Q7 turns on, grounding it's collector. In all other cases it will be off.

D1-D6 act as voltage limiters to protect the outputs of U2. D7-D12 protect the current switching transistors Q1-Q6 by limiting the reverse bias voltage across the emitter base junctions of Q1-Q6 to 0.7 volts.

D13-D18 block reverse currents. Without these diodes the collector of Q7 would never be able to reach +90 volts even with Q7 turned off.

R7 and the contrast pot R11 act to reduce the contrast provided by the DAC by shunting it's current output.

BEAM ON/OFF SWITCH

The BEAM ON/OFF SWITCH consists of a Schmidt-Trigger inverter, U4 pins 5 and 6, R10, C2, and Q7. After an intensity level has been selected by strobing data into U1 the beam is enabled by the CPU with a low level on U4-5. This will cause Q7 to turn on, grounding its collector (less than 1 Volt). The spot kill line is connected to Q2 on the display board. It is normally near ground, about 0.3 volts.

The spot kill line will become an open circuit only if the CPU attempts to hold the beam on continuously or if there is a loss of the +5, +25, or −25 Volt power supplied at the supply board. R8 acts to "pull up" the collector of Q7 when it is turned off.

TROUBLESHOOTING

The troubleshooting procedure for the multi-intensity board is a rather straightforward operation.

First, power down the game. Disconnect P1, the 34 pin ribbon cable connector; this disconnects the multi-intensity board from the CPU board. Also, the round connector plug at the neck of the CRT MUST be disconnected to prevent burn marks on the screen.

After these are both unplugged, power up the game and proceed to pin 14 of J1. Since the clock circuit consists primarily of inverters, testing is very basic. With J1-14 open check for "highs" on U3-4 and U4-2. Also verify that U4-4 and U4-12 are low. Using a test lead, ground J1-14. Recheck the last four measurements. Verify that all highs and lows are reversed.

Note that R9 and C1 form a filter which is invisible at low frequencies, as in this test.

The next step is to test the input latch and inverter, known as U1 & U2 respectively. With J1-30, open U1-14 should be "high." Tap the clock input, J1-14, with a grounded test lead. This will clock the high through to U1-15. U2 is an inverter so U2-10 should be low. This procedure is the same for pins 29-25 of J1. Next, hook a grounded jumper to J1-30. Tap the clock input, J1-14, with another grounded test lead, this should cause U1-15 to go low and U2-10 to go

high. Next, proceed with the beam on/off switch. With J1-12 open check for a low on U4-6. Also verify that the collector of Q7 is near +90 volts. Using a test lead, ground J1-12. U4-6 should be high and the collector of Q7 should be near ground, about 1 volt.

To troubleshoot the DAV turn the contrast pot fully clockwise (maximum resistance). Using a test lead, ground J1-12. Check for 45 volts at J2-1.

Now using a test lead, ground J1-30. Tap the clock input, J1-14, with another grounded test lead. Recheck J2-1 for a voltage reading near 29.1 volts. Repeat this procedure for J1 pins 29 thru 25. Refer to table 1 for voltage readings at J2-1.

The contrast pot will change the voltages measured at J2-1 if not kept at the same position during the test.

TABLE #1

J1 (pins 25-30) input from CPU (grounded)	J2 Pin 1 Voltage	Voltage difference between "steps"
30	29.1	
		6.1
29	35.2	
		3.3
28	38.5	
		1.5
27	40.0	
		.8
26	40.8	
		.3
25	41.1	

NOTES

1. The voltages listed in the table may vary somewhat. The voltage difference between steps are related roughly by powers of two.
2. Contrast pot was full CW.
3. Q7 "off" and pins 25-30 open = 93.8 volts at J2-1.
4. Q7 "on" and pins 25-30 open = 41.6 at J2-1.

INTERFACE SIGNALS

There are 2 plugs for connecting the multi-intensity board to a modified Vectorbeam monitor. The monitor modification will be briefly covered first.

Deleted from the monitor were the following items: Q1, Q3, R7, R9, and R22. Q1 and R7 were used to control high intensity. Q3 and R9 controlled the cathode drive for the normal intensity, respectively. R22 was removed from the spot kill protection circuit because the signal that drove the high intensity is now used to clock data into the latch on the multi-intensity card. The signal that drove the low intensity (J1-12) now drives the beam on circuit on the multi-intensity board.

The 9 pin Molex connector on the multi-intensity board supplies all the voltages needed by the board as follows:

CONNECTOR TABLE

J2 (pin)	Function
1	to R11, brightness pot.
2	N/C
3	from Q2 "spot kill" on monitor.
4	+90 volts.
5	N/C
6	N/C
7	N/C
8	GND
9	+5 volts

J1 (pin)	Function
1-11	N/C
12	spot kill from CPU board
13	N/C
14	clock input from CPU board
15	W1 presently grounded
16	N/C
17	W1 presently grounded
18-24	N/C
25-30	controls from X-coordinate drives of CPU board. 25-30 control 64 different levels of intensity.
31-34	N/C

C. CPU BOARD

The processor hardware can be broken down into five basic functional blocks as shown in Figure 6-1. The arrows indicate the possible data flow directions between the various blocks. The ALU and Control block are the main components of the processor while the Memory and I/O blocks may be thought of as merely peripherals. Figure 6-2 is a detailed block diagram of the processor. The numbers in each block correspond to the entries in Table 6-1, which lists the IC numbers of the main components of each functional block.

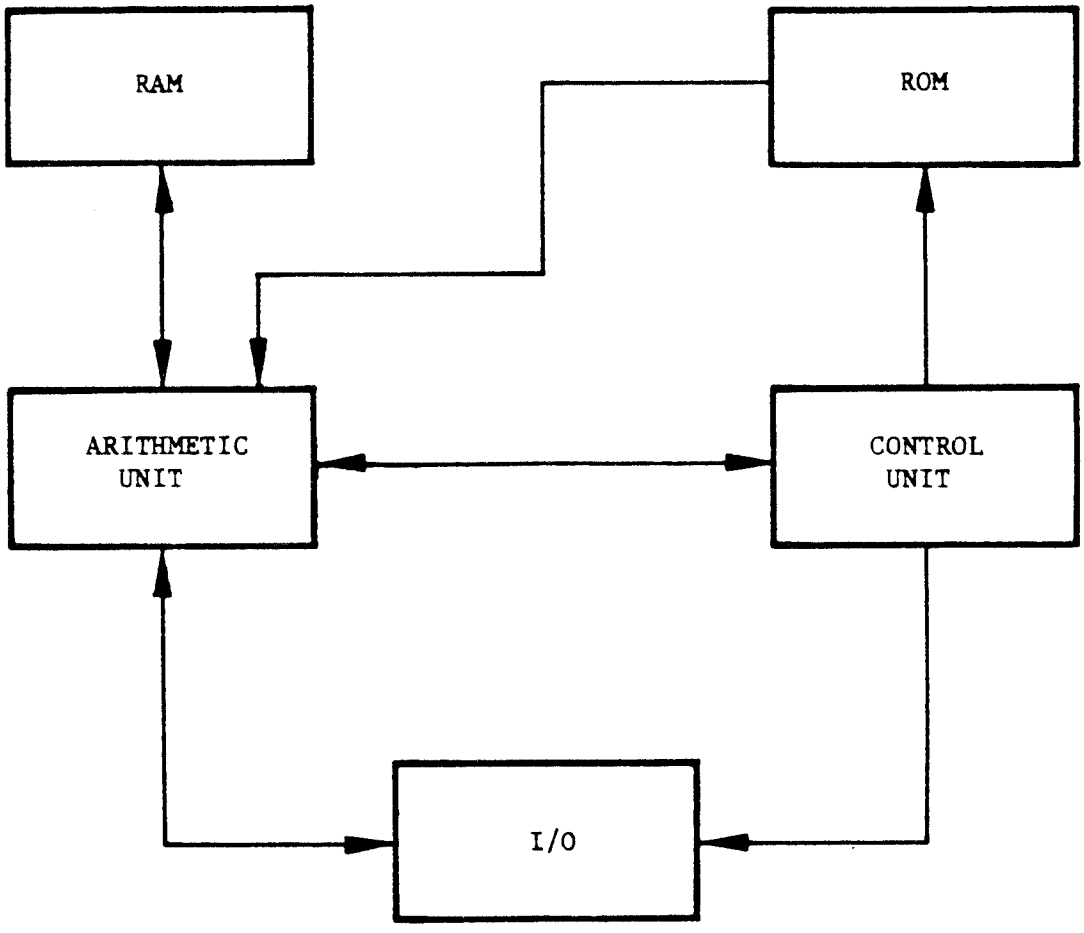

Figure 6-1. CPU Functional Block Diagram

The following is a brief description of each block shown in Figure 6-1. The numbers beside each functional block name are the numbers in Figure 6-2 which correspond to a particular function.

RAM (6)

The RAM is implemented with three read/write static memories configured as a 256 x 12 bit block. Data can be transferred to or from this memory via the ALU block. The processor uses this RAM as a scratch pad.

ROM (10)

The ROM is configured as an 16K x 8 bit block of memory. These memory locations contain the program instructions and/or data. It is accessed via the processor control unit.

I/O 19, 17, 18

The I/O block consists of 8 output lines implemented with a bit addressable latch, 24 input lines implemented with data selectors, and two 12 bit registers which are connected to the X Y display deflection circuits via D/A convertors.

Arithmetic Unit 1,2,3,4,5

The arithmetic unit performs all the arithmetic processing for the system. It consists primarily of two 12 bit accumulators, an arithmetic logic unit and various data selectors. The accumulators can function as temporary storage registers for arithmetic functions upon the data in the accumulators. The data selectors are used to select the various sources of data which will be processed.

Control Unit (15,16,14,7,8,9,11,12,13)

The control unit is the heart of the processor. It performs all instruction decoding operations and generates all the necessary control signals which the rest of the hardware requires to function correctly.

The following is a discussion of each block shown in Figure 6-2.

1. Accumulator Selector

The accumulator selector consists of 3 quad data selectors. They are used to select the output of either the primary or secondary accumulator for processing by various other sections of the systems.

2 & 3 Primary and Secondary Accumulators

The two 12 bit accumulators are implemented with quad bidirectional shift registers. The primary accumulator consists of S4, P4, M4. The secondary accumulator consists of T4, R4, N4. All data manipulation in the processor is accomplished using these two accumulators. All output data flows through these registers.

4. Arithmetic Logic Unit (ALU)

The ALU is used to perform all necessary arithmetic functions within the processor. The ALU is implemented using three 24LS181 (N6M6L6) function generators, three 74LS85 (N9,M9,L9) 4 bit magnitude comparators, and a 74S182 (L4) look ahead carry generator. The data which the ALU manipulates can come from four different sources. The first source is the contents of the accumulators via the accumulator selector. The second and third sources are the ROM and RAM data outputs via the ALU data selector (N11, M11, L11) and the fourth source is the external input selector (E4, D4, C4).

5. Data Selector

The data selector is used to read data into the ALU from either the RAM or ROM memory. Note that the ROM data is only 8 bits wide while the RAM data is 12 bits wide.

6. RAM Storage

The system RAM consists of three 9101C high speed static memory chips connected as a 256 x 12 bit block. The block is 12 bits wide in order to allow the contents of an accumulator to be stored. The processor uses the RAM as temporary storage of program variables, data pointers or any other data of a dynamic nature.

7. RAM Address Selector/Register

The output of this register is tied directly to the address lines of the RAM. It consists of a multiplexer which routes address data from either the ROM or RAM locations to the RAM address lines. The capability to use RAM data to select RAM addresses is the basis for the indirect addressing mode of the processor.

8. Page Selector

The page selector is used to latch the high order 4 bits of a RAM access instructions.

9. ROM Data Register

The register is used to temporarily hold data from the ROM during an instruction fetch.

10. ROM Memory

The ROM memory consists of the actual memory chips plus a data selector and latch circuit. The latch is used to improve the memory access time during a two byte instruction fetch by allowing one byte of the instruction to be latched while the RAM address lines are decoded for the other byte. The data selector can then be used to rapidly access both bytes of the instruction by switching between the latch and memory outputs.

11. Instruction Register

The instruction register is a latch which holds the current op code as read from ROM. Its output is tied to the instruction decode circuitry which in turn generates the necessary signals to execute the instruction.

12. System Sequencer

The system sequencer is used to decode an instruction op code and to generate the appropriate timed sequence of signals which execute the instruction. The op code is decoded by using it as the address data to a set of decoder ROMS. The outputs of the decoder ROMS are then synchronized with the system clock and used to control the various system functional blocks.

13. Line Length Counter

The line length counter is used during the process of drawing a vector to control the length of a vector, by turning off the beam at a pre-determined time after the vector is intiated. The counter is loaded with a value from a line length ROM and then counts up until it overflows which in turn generates a signal to indicate the vector has been finished.

14. Program Address Selector

This selector is used to provide the address data to the program ROM. It selects either the program address counter output or the accumulator selector output and routes this data to the ROM address lines. The ability to use the accumulator contents as address data allows the program to randomly access data tables stored in the ROM or to compute a branch address after a conditional test.

15. Program Address Counter

This is a 12 bit counter whose output defines the next location in ROM to be accessed. It is normally clocked sequentially to step through a program. However, it can be loaded with data from the program address register which is how the jump instructions are implemented.

16. Program Address-Register

This register is a latch used for temporary storage of an address which will be loaded into the program counter during a jump instruction. The input data to this latch can come from either the program ROM or the scratch-pad RAM.

17. Input Selector

The input selector is used to read the state of one of the 24 input lines into the selected accumulator. There are 16 primary inputs and 8 secondary inputs. During an input instruction the upper 11 bits of the accumulator are set to zero while the least significant bit reflects the state of the input line. All input lines have pull up resistors on them so that they will read high if they are left unconnected.

18. Output Selector

The output selector is a bit addressable latch used to control the 8 output lines. During an output instruction the selected output line is set to the complement of the least significant bit of the accumulator. The output lines are used to control the audio board, display intensity and the mechanical coin counter.

19. Display Registers

The display registers are the interface between the processor and the display driver circuits. These registers are latches into which the contents of the accumulators can be stored. The outputs are tied to D/A converters which provide the input voltage to the display deflection amplifiers.

TABLE 6-1. BLOCK NUMBERS AND COMPONENT I.C.

1. T-2, R-2, N-2
2. S-4, P-4, M-4
3. T-4, R-4, N-4
4. N-6, M-6, L-6, N-9, M-9, L-9
5. N-11, M-11, L-11
6. N-14, M-14, L-14
7. J-12, I-12
8. H-12
9. S-13
10. U-7, R-7, T-7, P-7, U-9, T-9, U-11, T-11
11. T-13
12. A-8, G-10, F-10, G-14, F-14, E-14, D-14, C-14
13. E-6, D-6, E-8, H-8, G-8, F-8
14. S-9, R-9, P-9
15. S-11, R-11, P-11
16. P-13, R-13
17. E-4, D-4, C-4
18. F-2
19. S-2, R-2, M-2

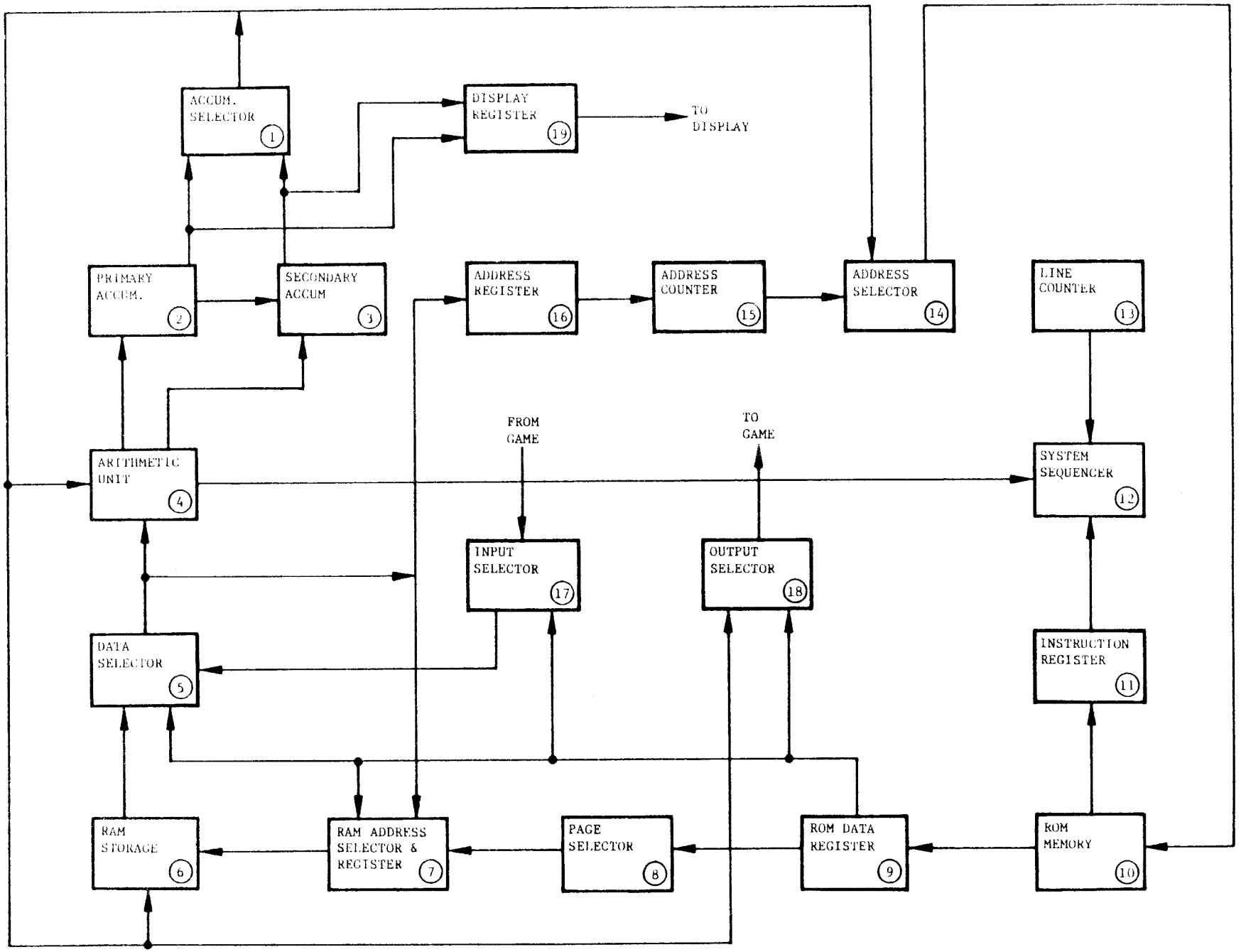

Figure 6-2. Detailed Block Diagram

D. AUDIO BOARD

CIRCUIT DESCRIPTION AND TROUBLESHOOTING GUIDE

GENERAL INFORMATION

The following section describes the theory of operation for the Solar Quest audio board. The last part of this section contains block diagrams of the audio board. The theory of operation of each block will be described along with test techniques to enable effective troubleshooting.

DEFINITIONS

TTL (Transistor - Transistor Logic) compatible levels are defined as follows:

1. A TTL "low" or logic O is any voltage less than 0.8 volts.
2. A TTL "high" or logic 1 is any voltage less greater +2.4 volts.

VCO: Voltage Controlled Oscillator
CCA: Current Controlled Amplifier
U: Integrated Circuit (chip)

NOTATION

A particular pin of an IC (Integrated Circuit) is denoted in the text by first the chip designation and then the pin number: e.g. U25-10 means pin 10 of U25.

Jumper patches W1 thru W16 are sections of traces on the audio board designed to be severed in order to isolate a section of circuitry for test purposes. Be sure to sever between the two eyelets, one round and the other square. The orientation of these pads is the same on the board as on the schematic diagram. Repair by adding a short jumper wire into the holes provided.

DO NOT repair any trace by adding a blob of solder at the sever. This will cause intermittent operation.

TEST PROCEDURE
(refer to Sheet 1 of the Schematics)

To verify proper operation of U1 and U2 disconnect the 16-pin ribbon cable at J2 and decreas the volume. Check U1-4, 12, 8 and U2-6 with a logic probe, scope, or meter. They should read high or 2.4vdc - 5 vdc (Logic 1).

Next, with a test lead, ground U1-1. U1-4 should now measure low or 0 to 4 vdc. Follow this procedure for the other three pairs of Schmitt-Trigger circuits.

To verify proper operation of U3 and U4, Load all lows into their output ports by tying U1-1 to grounf. Using another test lead connected to ground tap U1-5 twenty times. Outputs QA-QH on both IC's should measure low.

Repeat the above procedure, but remove the grounded test lead from U1-1. This should load all highs into all the output ports.

To check U7, first, load U3 with all lows and tap pin 11 with the grounded test lead and measure the outputs 1G-8Q. They should all measure low. Next, load U3 with all highs and again tap U7 pin 11 with the grounded test lead. The outputs should be high.

To check U's 5 and 6 load U's 3 and 4 with all lows and tap a grounded test lead to U23-10. Measure the outputs 1G-8Q on each. They should all measure low. To load all highs into U5 & U6, load all highs into U3 & U4, and tap U23-10 with the grounded test lead. NOTE: if problems are encountered here the music gating circuit may be at fault. Refer to its troubleshooting procedure if necessary.

TEST PROCEDURE
(Refer to Sheet 2 of the Schematics)

With a logic probe verify U24-12 is switching high and low or measure a 20MHz square-wave with a scope. U25-5&6 should measure 10MHz square-wave and U25-8&9 should measure 5MHz square-wave.

To verfiy proper operation of the Divide-by-Eleven circuit, tie one end of a test lead to ground and connect the other end to TP1. U15-6 should be high. Pins 11, 12, 13, 14 and 15 of U26 should all be toggling. Move the ground from TP1 to pin 9 of U26. Pins 11 & 13 should be low, pins 12 & 14 should be high. Remove the ground lead from Pin 9. Check the outputs of U27. Pins 2 & 3 should be toggling and measure 227KHz.

DIGITAL NOISE GENERATOR
(Refer to Block Diagram 2)

The digital noise generator is comprised of three cascaded serial in-parallel out shift registers. Four outputs from the third shift register are mixed together via 3 exclusive-or gates. The resulting signal is then used two places: One is to feed an anti lock-up control circuit and the other is to provide the input data for the first shift register. The output, taken from the QH output of the final shift register, is then fed into an amplifier to convert the signal from TTL level to a 12v P-P analog signal.

Shift Registers

U's 28-30 are 8-bit parallel output shift registers. Random data is generated by the combination of a long shift register in conjunction with a binary addition function. Consequently, three shift registers are used in a cascaded format. The clock signal for the three shift registers comes from the two phase clock generator displayed on block diagram three.

Mixer

The mixer is made up of 3 exclusive - OR gates whose inputs are taken from the final stage shift register.

The three gates perform a logical addition of 4 selected taps of the 24 stage shift register. U18-11 is then fed back to the input of the first stage shift register via an inverter (U24).

Anti Lock-Up Control

If at any time all outputs of the shift registeres becomes "ones," the input to the 1st stage will become a "one" and the shift registers will lock-up in an all "ones" state.

U31 is a binary counter wired up to provide the shift registers with a reset pulse if it counts 32 successive "ones." However, under normal conditions, U31-10 will never go high because the longest successive string of "ones" will normally span 23 clock pulses.

Trouble Shooting
(Refer to Sheet 2 of the Schematics)

With a test lead, ground Pin 11 of U18. Using a logic probe or scope monitor the outputs of all three shift registers. They should all be toggling. Pins 12 & 13 of U18 should also be toggling. U31 will now act as a straight binary counter so its outputs should also be toggling.

NUKE
(Refer to Block Diagram 6)

The nuke sound is heard whenever a player strikes the nuke button and will continue to be heard until either the nuke button is struck again or the nuke hits an enemy ship.

A gated oscillator (U13) feeds a two phase clock generator (U14). Two of the four clock signals generated are used to clock a divide-by-191 circuit. One of these clock signals is also used by a divide-by-128 circuit (U17). A third clock signal is used by the load control circuitry. The divide-by-191 circuit is further divided by two at U16 and mixed together with the output of the divide-by-128 by U18.

Gated Oscillator

U13 is a 555 timer IC which outputs a square wave whenever Pin 4 is high. R4, R5, and C1 determine the frequency of oscillation.

To verify proper operation of U3 and U4, load all lows into their output ports by tying U1-1 to ground. Using another test lead connected to ground tap U1-5 twenty times. Outputs QA-QH on both IC's should measure low.

Repeat the above procedure, but remove the grounded test lead from U1-1. This should load all highs into all the output ports.

To check U7, first, load U3 with all lows and tap pin 11 with the grounded test lead and measure the outputs 1G-8Q. They should all measure low. Next, load U3 with all highs and again tap U7 pin 11 with the grounded test lead. The outputs should be high.

To check U's 5 and 6 load U's 3 and 4 with all lows and tap a grounded test lead to U23-10. Measure the outputs 1G-8Q on each. They should all measure low. To load all highs into U5 & U6, load all highs into U3 & U4, and tap U23-10 with the grounded test lead. NOTE: if problems are encountered here, the music gating circuit may be at fault. Refer to its troubleshooting procedure if necessary.

QUICK CHECK PROCEDURE

At this point, all of the sounds generated on the audio board can be checked. Follow the above procedure for loading all "ones" into the control latch U7. The Nuke sound should be turned on at this time. To turn it off, ground U7 pin 15 with a test lead. With another test lead, tap the following pin numbers on U7 to activate the corresponding sounds.

SOUND CHECK TABLE

Pin number on U7	Sound
2	Loud explosion
5	Soft explosion
6	Thrust
9	Capture
12	Fire
16	Photon

To check the Music circuit, load all "ones" into the output latches, U5, U6 & U7 as described above. Ground U7-15 with a test load to disable the Nuke sound. With another test lead, ground either pin 5, 6 or 9 of U5 to enable the music amplitude signal. With yet another grounded test lead, tap pins 12, 15, 16, & 19 on U5 and pins 2, 5, 6, & 9 on U6. A different tone should be heard for each grounded pin.

MASTER CLOCK CIRCUITRY
(Refer to Block Diagram Two)

The crystal and 3 inverters (1/2 U24) constitute a 20MHz oscillator. U25 is a J-K flip-flop used to divide the 20MHz down to 5MHz. U26 and U15 together constitute a divided by eleven circuit. This is accomplished as follows: U26 is a presettable binary counter. By preloading the input with five (pins 3 & 5 pulled high and 4 & 6 grounded), the counter starts counting from 5 to 15 every time a clock pulse arrives at pin 2. At fifteen a carry pulse is generated at Pin 15 and is fed to Pin 2 of a D-flip-flop (U15). The output of U15 then goes low for one clock pulse. The low is fed to the load input of the counter and it starts counting from 5 to 15 all over again. Thus, the frequency at the output of U15 is 5MHz/11. This signal is then fed to a J-K flip-flop which toggles every time a clock pulse occurs at Pin 12, making the output 1/2 its clock input of 227KHz.

Two Phase Clock

The two phase clock utilizes both halves of a 74LS74 (U14) and two inverters (U2). This circuit generates 2 square waves 90 degrees out of phase and their compliments. This phasing insures that U11-2, U12-2 and U15-11 are clocked in sequence.

Divide-By-191 and Load Control Circuit

U11 & U12 comprise an 8-bit binary counter. When the "N-Load-" signal appearing at Pin 9 of both U11 & 12 goes low and each gets clocked, the binary equivalent of 65 gets preloaded into the 8-bit binary counter. After 191 clock cycles, the carry output of U11 (Pin 15) goes high. During the same clock cycle, this signal, also appearing at U15-12, gets clocked through causing U15-8 (N Load-) to go low. Consequently the binary counter is again preloaded with 65 and the cycle repeats itself.

Divide-By-Two Circuit

This circuit simply consists of a J-K flip-flop (U16) which is wired such that the output toggles every clock pulse.

Divide-By-128

This circuit is simply two cascaded 4-bit binary counters (U17). Pin 9 is a square wave which toggles every 64 clock pulses appearing at Pin 1.

Mixer

The mixer consists of one exclusive -OR Gate (U18) that logically adds the results of the divide-by-128 circuit and divide-by-2 circuit.

Trouble Shooting
(Refer to Sheet 1 of Schematics)

Load all "ones" in the output latch, U7 as described in the input control circuitry. Monitor the signal at U13-3. It should be a square wave with a period of about 23usec. Check the signals appearing at Pins 5, 6, 8, 9 of U14. They should all be square wave with a period about 46usec. To insure proper operation of U's 11 & 12, ground TP4 with a test lead. U15-8 should remain high so U11 & 12 will act as standard binary counters. With a logic probe or scope, check pins 11-15 on each IC. All should be toggling. Remove the ground from TP4 and move it to U15-8. Again check the outputs of U11 & 12. Pins 11, 12, 13, 15 of U12 and 11, 13, 14, 15 of U11 will be low. Pins U12-14 and U11-12 will be high. Remove the ground from U15-8. Check pins 3-6 & 8-11 of U17. All should be toggling.

LOUD EXPLOSION
(Refer to Block Diagram 4)

The loud explosion is activated whenever a player's ship is blown-up. The basic components of this circuit are white noise, from the digital noise generator, a low pass filter, a current controlled amplifier (CCA), an envelope control circuit and a voltage switch.

Low Pass Filter

The output of the noise generator circuit is fed into the low pass filter, R15-19, C16 and C7. The filtered output is then fed directly into the CCA (U33).

Current Controlled Amplifier (CCA)
(Refer to Figure 1)

U33 can be imagined as an amplifier that generates a current wave form at Pin 6 characteristic of the voltage appearing at Pin 2. The gain of the output is proportional to the amount of current injected into Pin 5.

Envelope Control

R26 limits the amount of current injected into Pin 5 of the CCA and the RC time constant of R26 & C8 determines the envelope or decay time of the output waveform at Pin 6.

Voltage Switch

This circuit is turned on by placing a low level at the junction of R20 & R21. Q1 gets forward biased and turns on. This subsequently forward biases Q2 and injects current into the CCA.

Test Procedure
(Refer to Sheet 3 of Schematics)

With J2 disconnected from the CPU board, load all "ones" into the output latch (U7) as described in the input control circuitry section. Next ground Pin 15 of U7 to turn off the nuke sound. The junction of R20 & R21 should measure about +5vdc. Grounding this point should cause the collector of Q1 to switch from −3.5vdc to about +5vdc. This results in forward biasing Q3 and causing its collector to change from about −14.5vdc to about +5vdc. If for any reason the voltage switch circuit is suspect, it may be eliminated by cutting W3. By tapping a grounded test lead to the square pad of W3, current is injected into the CCA and an explosion should be heard. If not, verify that the noise generator is functioning properly and R15 is receiving the noise signal. If any of the following sounds work (see Quick Check Procedure), thrust, music or photon replace U33. If none of the above work, perform a check of the voltage follower circuit (see voltage follower). If the voltage follower is operating correctly, one of the other CA3080's may be shorted. To isolate any one of them whose outputs feed the voltage follower, cut the appropriate test jumper until the explosion circuit works.

Voltage Follower
(Refer to Block Diagram 7)

R147 converts the total current output of all the CA3080's to a voltage. Since this is a high impedance point, U49 is used to amplify the signal at Pin 3 before feeding it to the pot driver (U50)

Test Procedure
(Refer to Sheet 3 of Schematics)

If any of the following sounds work, music, loud and soft explosions, thrust, photon, it's pretty safe to assume that U49 is working properly. However, if none of these sounds work, cut W16 and apply a known good signal via a test lead to the square pad of W16. The output of the noise generator, Pin 6 of U32, is a good choice. If the input control latch is set up properly so that no other sounds are on, the noise signal should be heard on the speaker.

SOFT EXPLOSION
(Refer to Block Diagram 4)

The soft explosion is heard whenever an enemy ship or survivor is destroyed. The technical description is identical to that of the loud explosion. The difference between the two circuits only being the component values in the envelope control circuitry giving the sound a faster decay time and lower volume.

Test Procedure
(Refer to Sheet 3 of Schematics)

See Test Procedure for Loud Explosion.

THRUST
(Refer to Block Diagram 4)

The thrust sound is activated whenever the player's ship is in motion. The technical description is identical to that of the loud explosion sound. The differences between the two circuits are different component values in the low pass filter and envelope control circuitry. These are responsible for a different frequency response, amplitude, attack and decay times.

Test Procedure
(Refer to Sheet 3 of Schematics)

See Test Procedure for Loud Explosion sound.

CAPTURE
(Refer to Block Diagram 5)

The capture sound is heard whenever a player's ship retrieves a survivor. The circuitry to create this sound consists of a low leakage swtich, voltage controlled oscillator (VCO), TTL level converter, and a binary counter.

A low level applied to the input of the low leakage switch causes a change in voltage at Pin 5 of the VCO (U42). This control voltage causes the frequency at the output of the VCO to sweep up. As the signal rides on a DC level, a coupling capacitor is used to A-C couple the signal to a bipolar-to-TTL level converter consisting of R92-94, Q13, D7 and D8. This signal is then fed into a binary counter (U21) where it is divided by two. The signal is then adjusted for volume by R95-97 and A-C coupled by C22 before being sent to the summing junction.

Test Procedure
(Refer to Sheet 3 of Schematics)

Load all "ones" into the output latch U7, as described in the Input Control Circuitry section. With a test lead, ground U7-15 to disable the nuke sound.

Measure the collector of Q11. With another grounded test lead, tap the junction of R82 & R83, it should switch from −3.5vdc to about +5vdc. Next measure the collector of Q12. It should switch from +14vdc to GND. Pin 5 of U42 should switch from about +14vdc to about +12.5vdc.

If there is any doubt concerning the operation of Q12, cut W10. A grounded test lead may be used to simulate the action of Q12 by touching the test lead to the square end of W10.

Next, measure the frequency at Pin 3 of U42 with R82-83 ungrounded. It should have a period of about 0.86ms and be riding on a +6vdc level. It should be approximately 8V P-P in amplitude. Next ground the junction of R82 & 83. The period should be about 0.2ms. Remove the ground from the junction of R82 & 83.

Next check the collector of Q13. The period should be identical to the signal at U42-3, and have TTL compatible levels.

To insure proper operation of the binary counter (U21) monitor Pin 1. Again the signal here should be identical to that of the collector of Q13. Pin 2 should be high as well as Pins 3 through 6. Next ground the junction of R82 & 83. Pin 2 should now also be grounded and the outputs Pins 3-6 should be toggling.

PHOTON
(Refer to Block Diagram 5)

The photon sound is heard whenever a nuke is fired from a player's ship. Featured in this circuitry is a free-running oscillator (U35) which feeds a low-leakage switch. The switching voltage level at the output of the low-leakage switch feeds a discrete wide-range voltage-controlled oscillator (WR VCO), U's 36-40, whose output is injected into a current controlled amplifier (CCA), U41. A voltage switch and amplitude control circuit then determine the characteristics of the CCA output wave form.

Free Running Oscillator
(Refer to Sheet 3 of the Schematics)

U35 is a 555 timer IC configured to operate as a free-running oscillator. R47 & 48 and C13 determine its operating frequency.

Low Leakage Switch

The low-leakage switch consists of the following components: R49-54, Q7 and Q8. A low level of the junction of R49 and R50, forward biases Q7 turning it on. The collector voltage switches from −3.5vdc to about 5vdc. Subsequently Q8 gets forward biased and its collector voltage switches from +14vdc to about ground.

R59 & R60 form a simple voltage divider. The resulting voltage is fed to Pin 3 of U36. When Q8 gets turned on, R58 is placed in parallel with R60, thus changing the voltage divider and the voltage at U36-3. C15 is used to determine that rate of change.

Wide Range Voltage Controlled Oscillator (WRVCO)
(Refer to Block Diagram 8 and Sheet 3 of Schematics)

The WRVCO consists of U's 36-40. U36 is a voltage follower whose output is directly proporational to the changing voltage appearing at Pin 3. U37 is configured and an inverting amplifier whose output is equal but opposite to that of the voltage follower. These two outputs determine the upper and lower limits of the VCO. U's 38 & 39 are used to compare the capacitor voltage appearing at C16 to the upper and lower limits set by U36 & 37. The comparator outputs are summed together via R65 & 69 and fed to an Analog Flip-Flop (AFF), U40.

D5 and D6 limit the output of the AFF to +/−10.7vdc, which is then fed to an integrator R71 & 69 and fed back to the two comparators.

Assume the upper limit equals +5vdc. The lower limit would then be −5vdc. Further assume the output of the AFF is sitting at −10.7vdc and the capacitor voltage is slightly negative. The capacitor voltages starts charging toward −10.7vdc. When it goes slightly more negative than −5vdc, the lower comparators are positive, forcing the AFF to switch from −10.7vdc to +10.7vdc, and the capacitor voltage begins charging toward +10.7vdc. The cycle then repeats itself.

If the upper and lower limits are increased in magnitude, it will take more time for the capacitor to charge and discharge, causing the output frequency to decrease.

CCA (Current Controlled Amplifier)

The output of the WRVCO is fed to a current controlled amplifier, U41. For a technical description, refer to Loud Explosion Section.

Envelope Control

C17 & R81 determine the signal level and envelope decay of the output waveform at U41-6. For a technical description refer to Loud Explosion Section.

Voltage Switch

R75 through R80, Q9 and Q10 comprise the voltage switch used to enable the photon sound. The technical description is identical to that found in the Loud Explosion Section.

Test Procedure
(Refer to Sheet 3 of Schematics)

Load all "ones" into the output latch (U7) and ground U7-15 to disable the nuke sound. Check the output of the free-running oscillator, U35-3. A TTL level square wave with a period of 140ms should be present. The collector of Q7 should be a square-wave switching between −3.5vdc and +5vdc with a 140ms period. The collector of Q8 should be switching between +11vdc and ground, with a 140ms period. However, instead of a square-wave, the signal should be an RC charging waveform.

The waveform at U36-6 should swing from +2vdc to +11vdc and resemble that at the collector of Q8. The waveform at U37-6 should swing from −2vdc to −11vdc and be exactly opposite that of U36-6.

To check the operation of U38-40 tie the junction of R71 & C16 to +15vdc with a test lead. Pin 6 of each IC should measure −15vdc. Next tie the junction of R71 & C16 to −15vdc supply. Pin 6 of each IC should now measure +15vdc. Remove the test lead.

To insure proper operation of the voltage switch, ground the junction of R75 & 76. The collector of Q9 should measure about +5vdc. The collector of Q10 should also measure +5vdc.

If any of the following sounds work change U41: Loud Explosion, Soft Explosion, Thrust or Music. If none of the above work, refer to the section labeled voltage follower.

FIRE
(Refer to Block Diagram 6)

The fire sound is heard whenever a player depresses the fire button. Noise is injected into a discrete voltage control bandpass filter made up of U's 43-37 and components R98-107, R109-112, R120, and C23-25.

R108 & R119 and C26 comprise the amplitude, envelope and frequency control. A voltage switch (Q14, Q15 and R113 through 118) provides the means of enabling the sound.

Voltage Controlled Bandpass Filter
(Refer to Block Diagram 9)

U44 and U46 are current controlled amplifiers (CCA). They are involved in performing two key functions in this circuit. First, U44, R108, C26, U45, R119 and C26 control the amplitude of decay of the signal appearing at the bandpass output. For a description of this function refer to the CCA and Envelope Control subtitles under the Loud Explosion Section.

Secondly, with the addition of C23 and C25, the CCA's provide frequency control. This is accomplished as follows: The CCA's are current sources. A current source and a capacitor constant and varying the strength of the current source will give the effect of varying the capacitance. When the CCA's are turned on hard by applying a low to the input of the voltage switch (refer to description of voltage switch under Loud Explosion Section) the current sources provide their maximum current. When the low is removed from the voltage switch and C26 starts discharging the CCA's provide less and less current drive. The effect is the same as if the capacitance of C23 & 25 were slowly increasing. Consequently, the frequency response of the circuit starts to decrease and we have in effect variable frequency active filters. U45 & U47 are high impedance buffers used to minimize circuit interaction between the two CCA's.

U43 serves as a summing amplifier for the output of the variable active filters.

Trouble Shooting
(Refer to Sheet 2 of Schematics)

Insure a good noise signal at the input of R98. Load all "ones" into the output latch, U7 as described in the Input Circuitry section and ground U7-15 to disable the nuke sound.

Measure the collector of Q14. It should be −3.5vdc. Next measure the collector of Q15. It should be −15vdc. With a scope, monitor Pin 6 of U43. It should be an 8v P-P waveform centered about ground. Next measure Pin 6 of U44, U45, U46 & U47. There should be no signal present.

Ground the junction of R113 & 114. Measure the collectors of Q14 & 15. They both should be about +5vdc. Now look at Pin 6 of U43. It should measure 10-12v P-P centered about ground. Pin 6 of U's 44 through 47 should all measure 4-6v P-P centered about ground.

MUSIC
(Refer to Block Diagram 3)

Various musical tones are played when a player receives either an extra ship or nuke, and at the beginning of new phases.

The circuitry involved consists of a two phase clock; a 12-bit divide-by-N counter, which determines the musical note to be generated; a music load control, used to reload the frequency select lines into the divide-by-N circuit; a music latch clock gating circuit which insures that the frequency select lines do not change during a load operation; a current controlled amplifier; three voltage switches and amplitude control networks.

Two Phase Clock Generator

The two phase clock generator utilizes both halves of U19. It outputs two square-waves 90 degrees out of phase and their compliments. These four clock signals are used to clock U8-1, U9-1, U10-1, and U20-11 in sequence.

12-Bit Divide-By-N Counter

U8, 9 and 10 are 4-bit binary counters cascaded to form a 12-bit counter. When the "M Load −" signal goes low at Pin 9 of each counter and all three get clocked, the data appearing at pins 3 through 6 of U8, 9 and 10 gets preloaded into the counters. This data is referred to as the number N. After 4096-N clock pulses, the carry output of U8 (Pin 15) goes high causing the "M Load −" signal to go low and the data appearing at the counter inputs is again loaded and the sequence is repeated.

Digital Music Output

The compliment of the "M Load −" signal at U20-9 is fed to pin 9 of U16. For every pulse appearing at U16-9 the "D Music +" signal at U16-5 toggles. This signal then would have one half the frequency of the incoming clock, and is always a square wave.

Music Latch Clock Gating Circuit

This circuit is composed of U's 20 through 23. When the CPU wants to change the frequency select lines, it sends a pulse to connector J2-11. This pulse arrives at U20-3 and forces U20-6 low. This sets the "REQ" (request) signal at U22-9 low. If no M load operation is in progress, then U22-10 goes high. When MBCLK + goes from a low-to-high transition at U23-11, U23-9 goes high and the frequency select inputs at U5 & 6 get latched to the outputs of U5 & 6.

The second half of U23 is used to cancel the request (REQ −) after a short delay.

Because the M Load − signal can remain low indefinitely if all frequency selects are high, U21-9 will go high 4 clock cycles after a request (REQ −) has been made. This will preset U23-9 high, generating a M latch + signal thus canceling the request.

Current Controlled Amplifier

The digital music signal from U16-5 is fed to a CCA, U48. For a technical description refer to the Loud Explosion Section.

Amplitude Controls

There are three set of amplitude controls for the music circuit; C28, C29, C30, R132, R139, R140, R147, and R148. These different combinations give the music circuit more versatility by allowing different volume and envelope characteristics. For a technical description, refer to the Envelope discussion under the Loud Explosion Section.

Voltage Switches

There are three voltage switches whose input come from U5 pins 5, 6 & 9. (These voltage switches consist of Q16 thru G19 and associated resistors.) For a technical description, refer to the Loud Explosion Section.

Trouble Shooting

With a logic probe verify that U19 pins 5, 6, 8 and 9 all toggle.

To verify proper operation of the 12 bit counter (U8, U9 and I10), ground TP2 with a test lead. With a logic probe check pins 11 thru 15 on all 3 counters, they should all be toggling.

Next, move the grounded test load from TP2 to U20-Load all "ones" into U5 and U6 (refer to Input Control section). With a logic probe check pins 11 thru 14 on all 3 counters, they should all be high.

Using a second grounded test lead, ground U8-6. Verify that U8-11 is now low. Repeat this procedure for pins 11 thru 14 on U8, U9 and U10.

Remove the grounded test lead from U20-8 and place it on U5-12). The carry outputs of all three counters should be pulsing also check for activity at U20 pins 8, 9 and 12; and at U16 pins 5 and 9.

OUTPUT AMPLIFIER
(Refer to Block Diagram 1)

The output amplifier section consists of a preamp and volume pot driver U58 (TL081), main driver amp U51 (TL081) and speaker drive transistors Q22 and Q23. U50 drives the external volume pot located on the coin door and its associated cable. If little or no volume is heard, use an ohmmeter to meter the pot wires between J1-8 and J1-3. The resistance should vary as the pot is rotated. If the audio is at maximum volume regardless of the pot position, suspect an open lead between ground and the pot lead connected to connector J1-1. The final drive is a non-inverting amplifier circuit containing U51, Q22, and Q23. Observe the waveform at the speaker wire which is the emitter junction of Q22 and Q23. If the upper half of any sound waveform appears clipped, suspect Q22. For the lower half, Q23 is the suspect. For no audio, meter Q22 and Q23 out of circuit and look for burned resistors R155 and R156. Also check diodes D9 and D10 at this time.

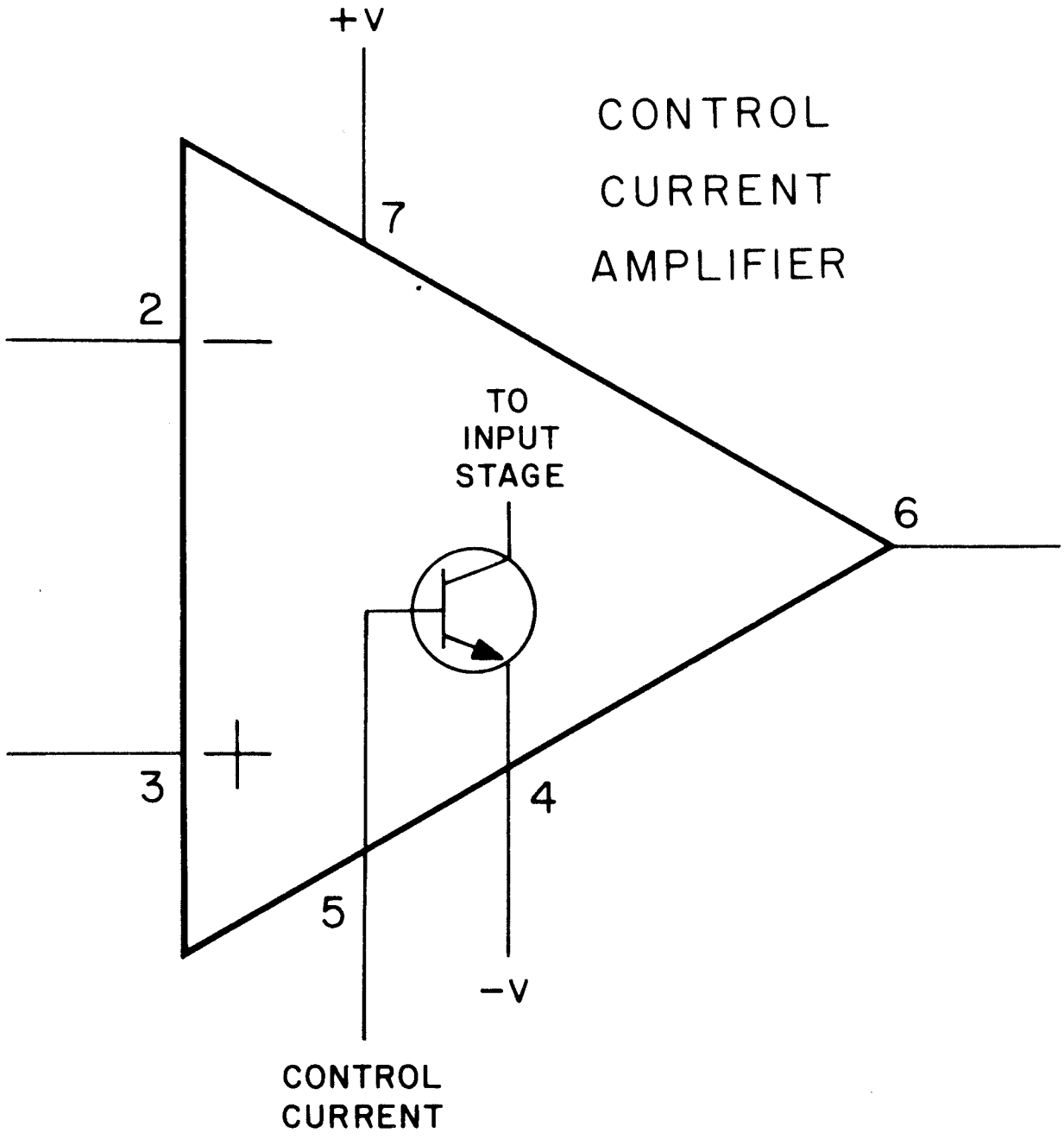
+V
CONTROL
CURRENT
AMPLIFIER
7
2
TO
INPUT
STAGE
6
3
4
5
-V
CONTROL
CURRENT

FIGURE ONE

INPUT CONTROL CIRCUITRY

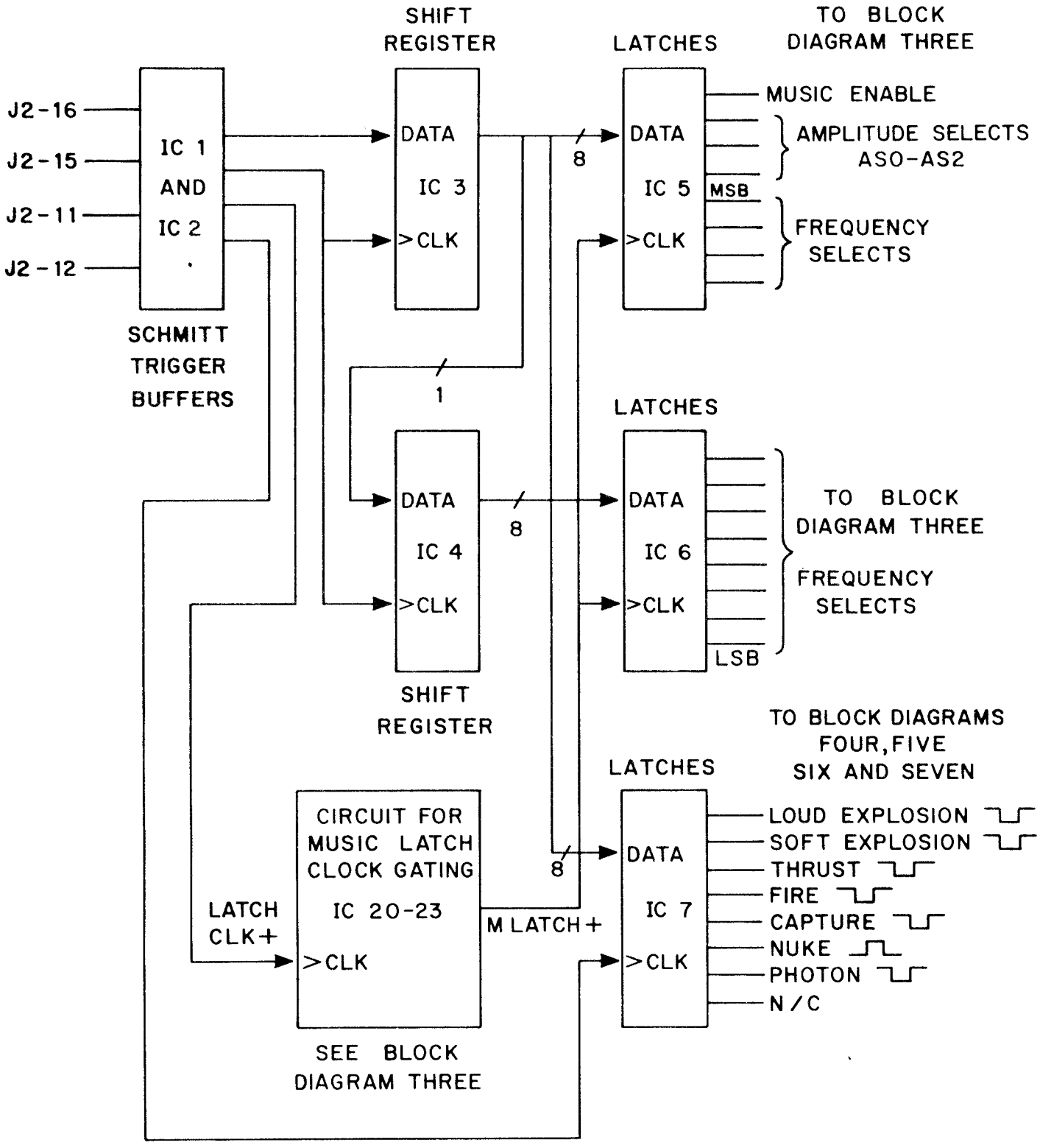

BLOCK DIAGRAM ONE

MASTER CLOCK

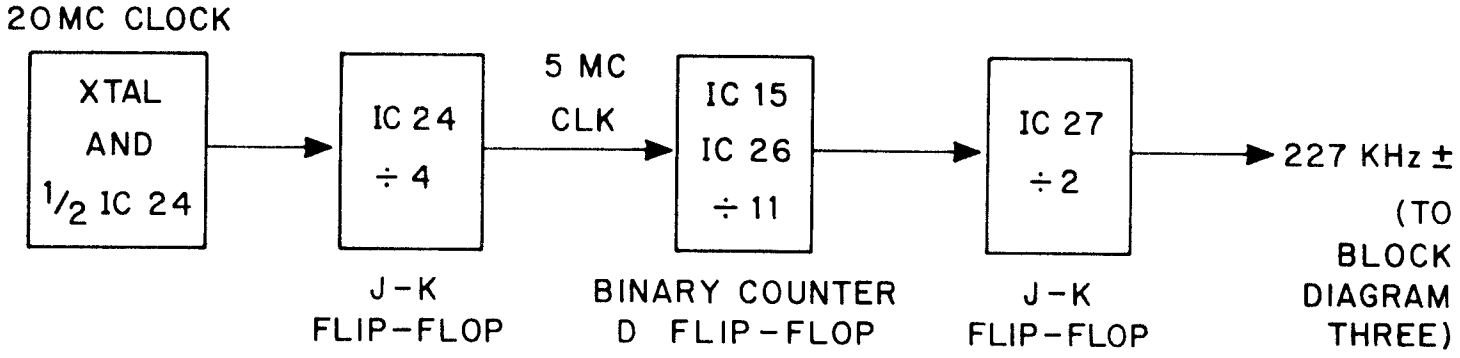

DIGITAL NOISE GENERATOR

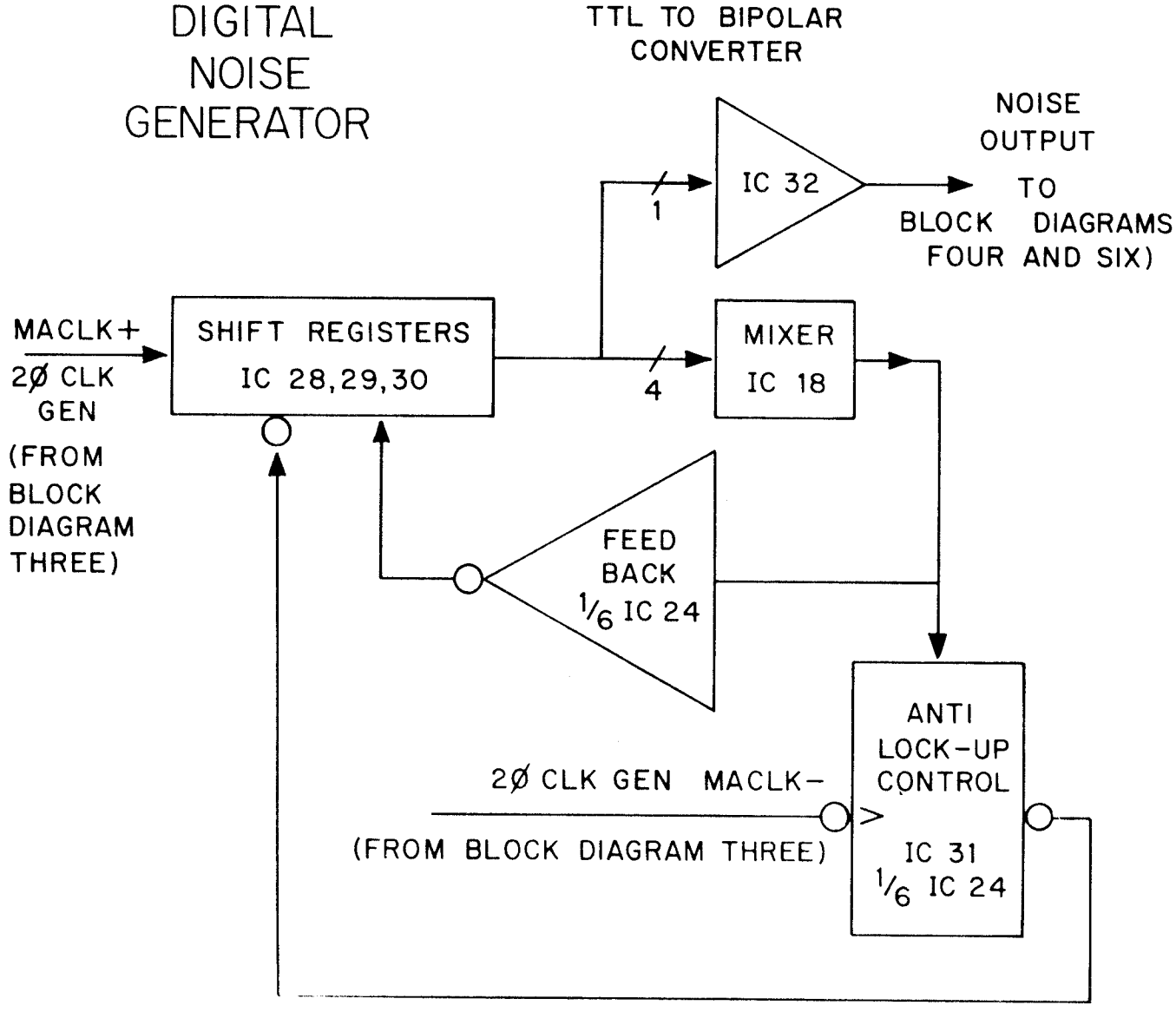

BLOCK DIAGRAM TWO

MUSIC CIRCUIT

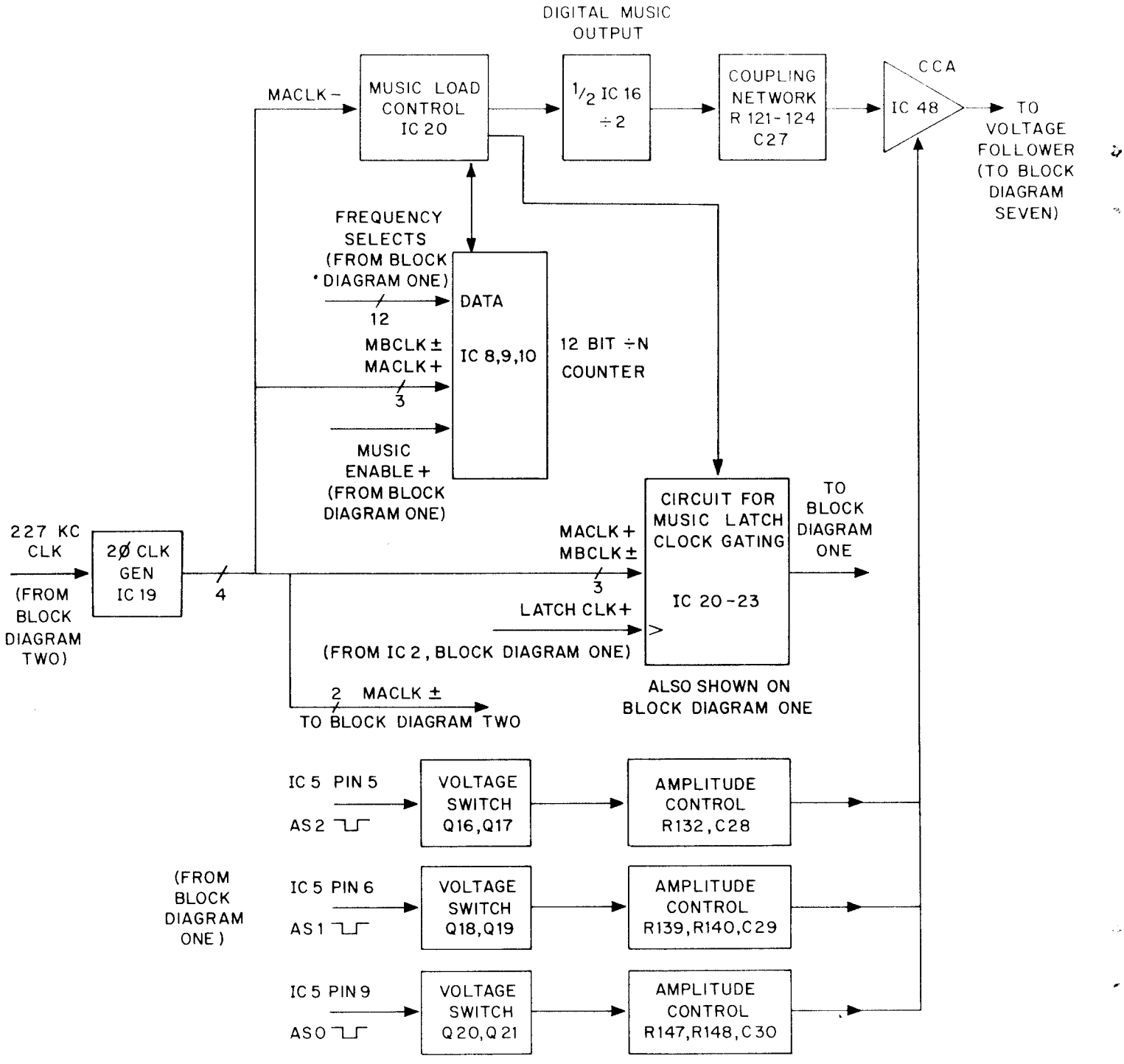

BLOCK DIAGRAM THREE

EXPLOSIONS AND THRUST

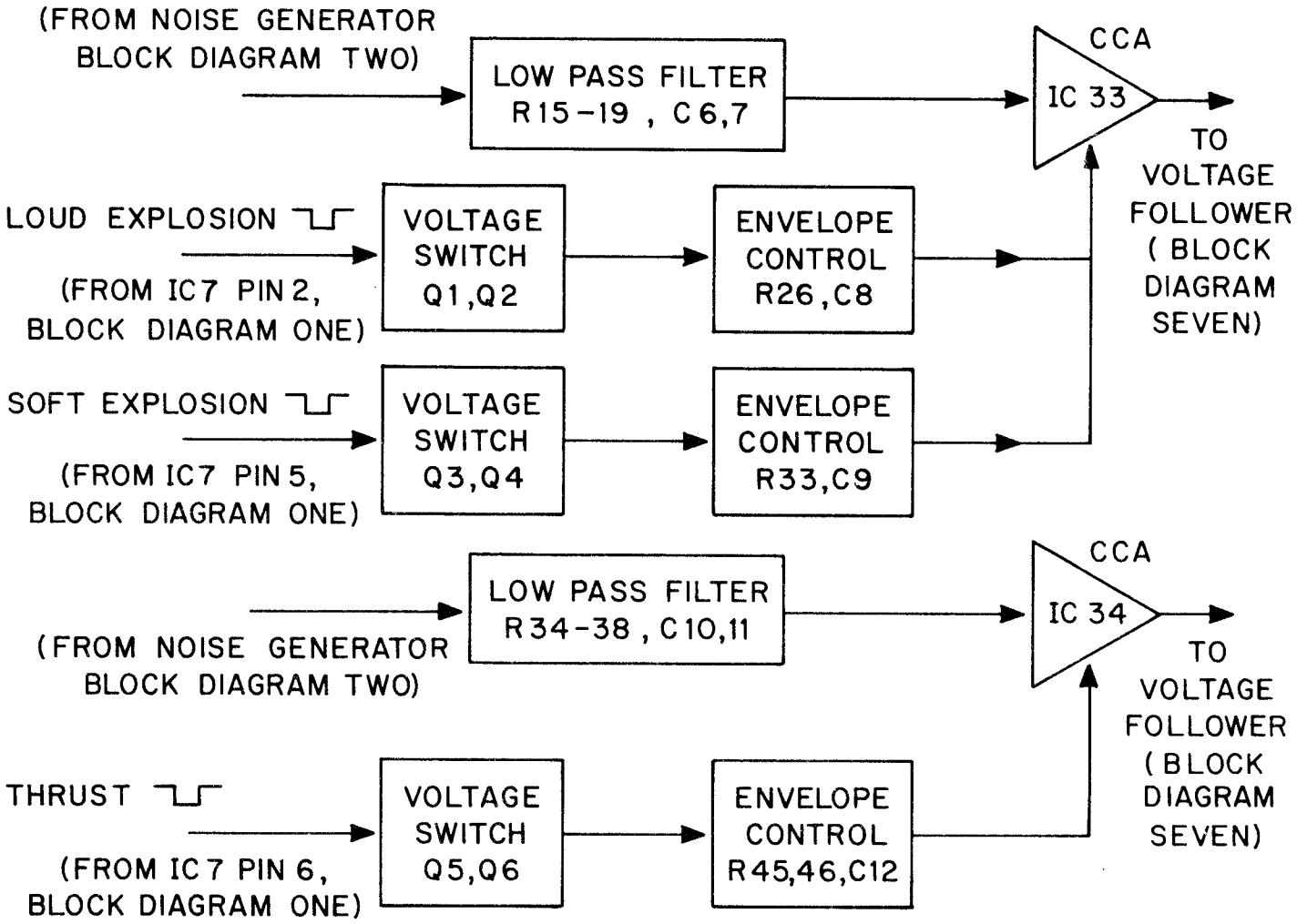

BLOCK DIAGRAM FOUR

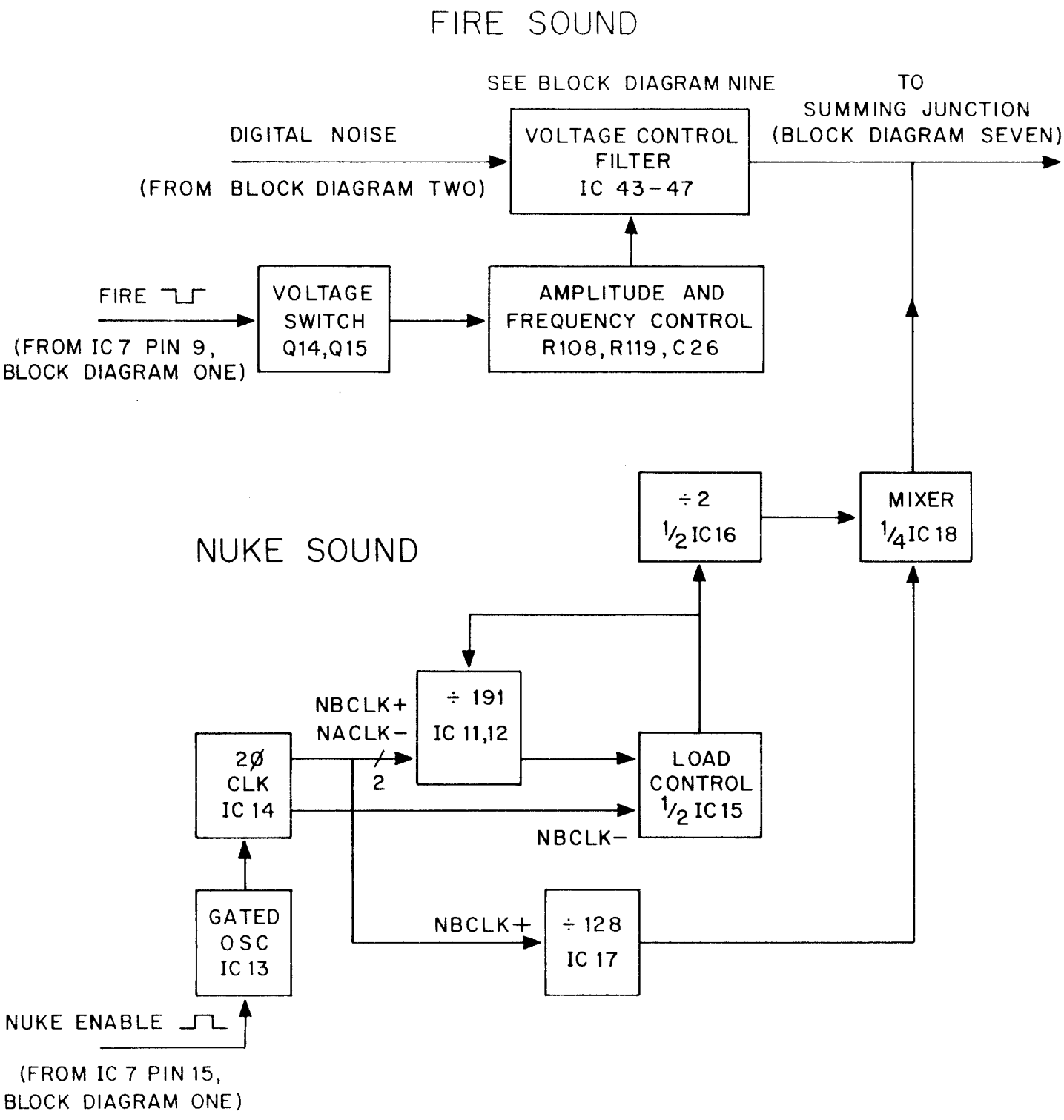

BLOCK DIAGRAM SIX

BLOCK DIAGRAM FIVE

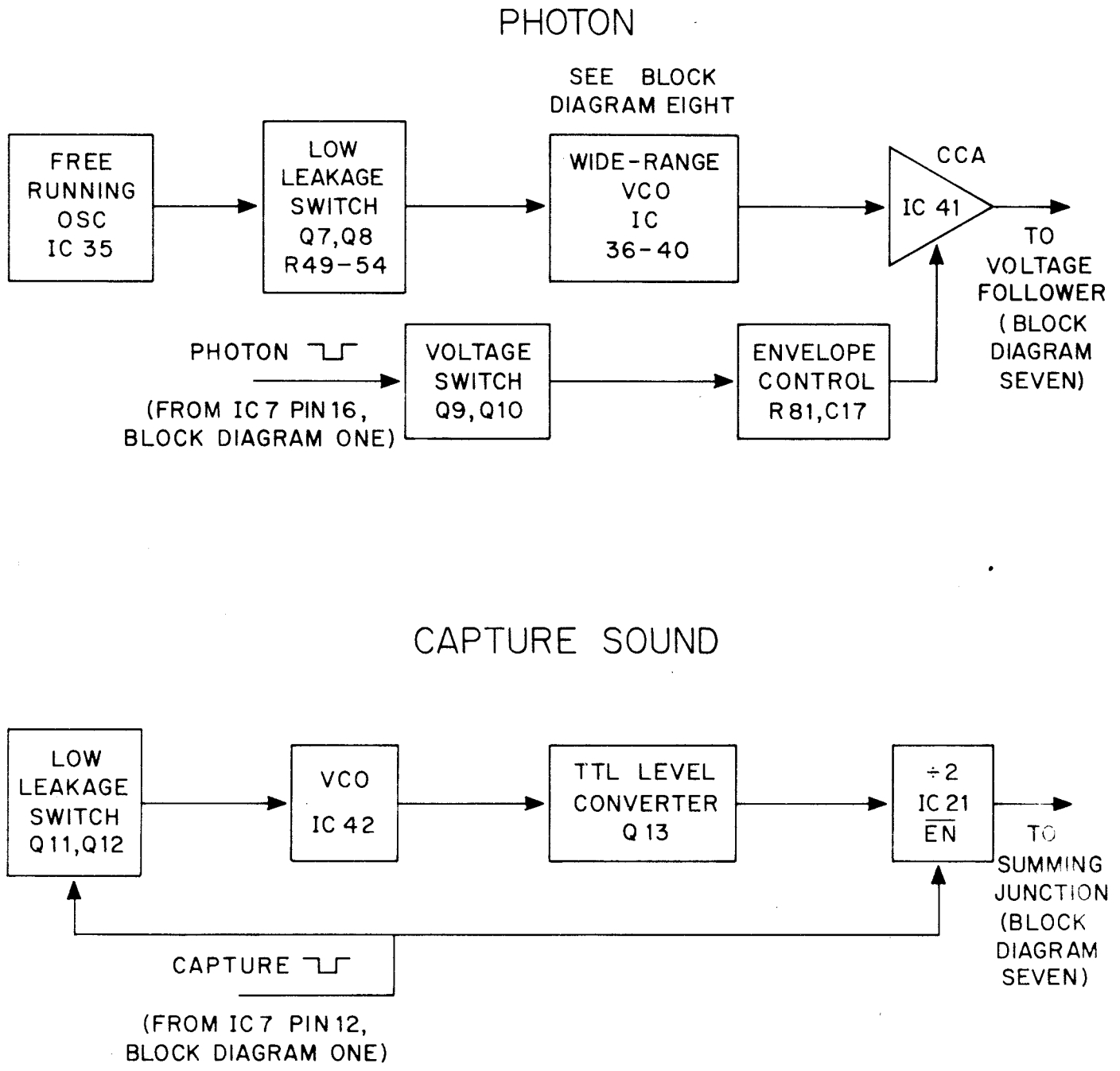

OUTPUT CIRCUITRY

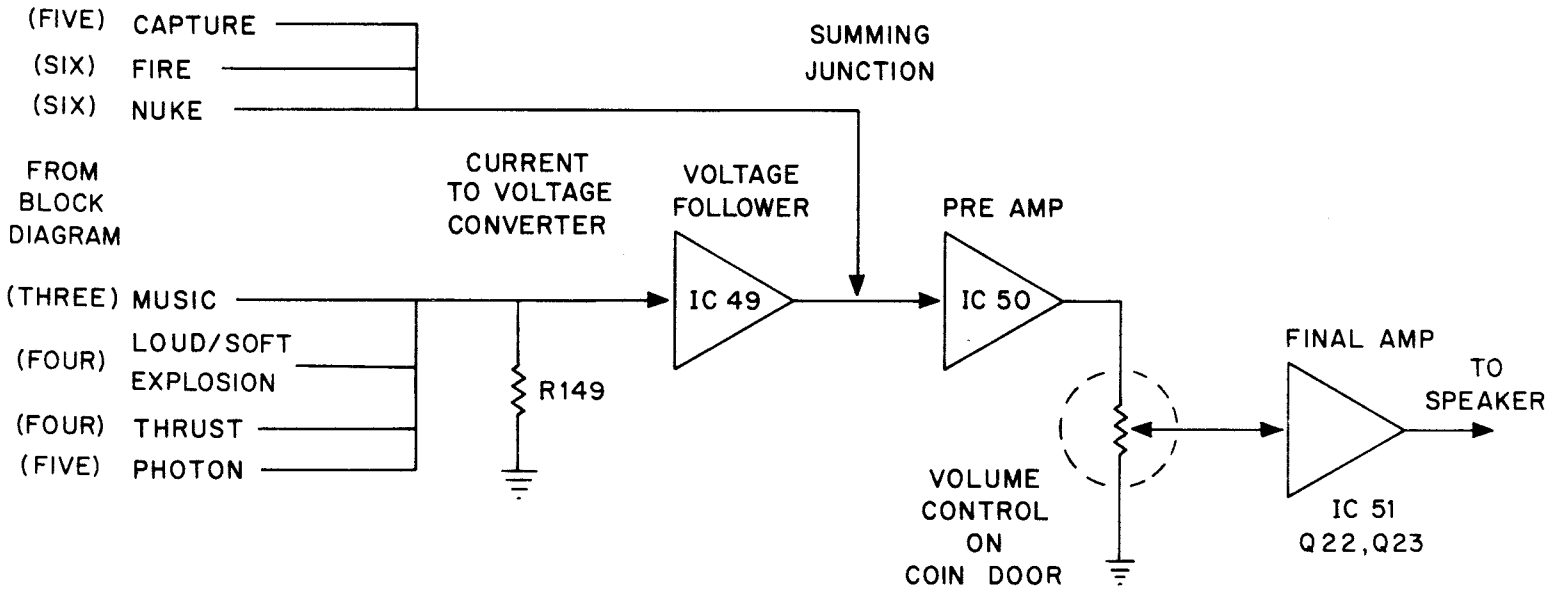

BLOCK DIAGRAM SEVEN

WIDE-RANGE VOLTAGE CONTROLLED OSCILLATOR

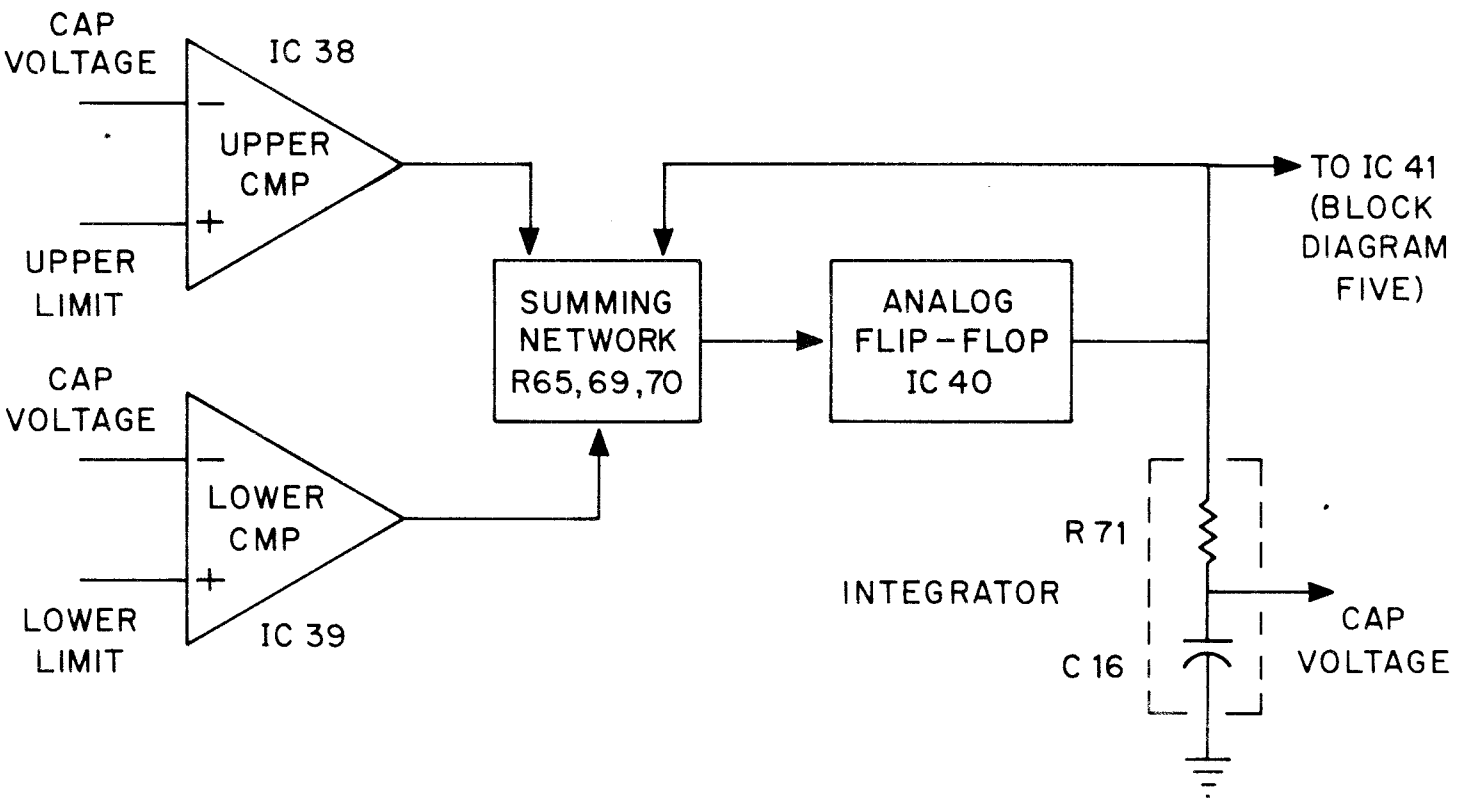

BLOCK DIAGRAM EIGHT

VOLTAGE CONTROL FILTER

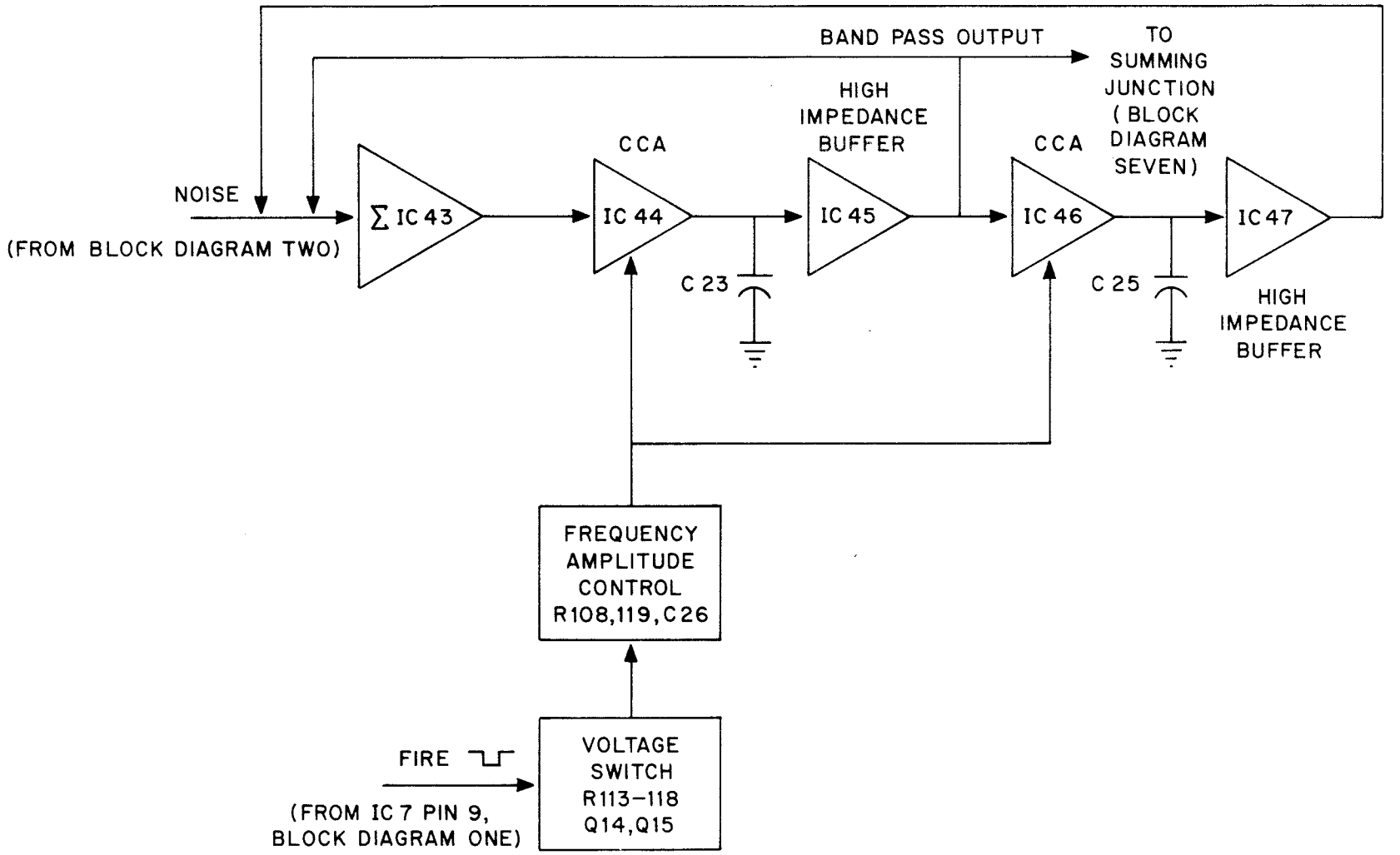

BLOCK DIAGRAM NINE

SECTION 7

TROUBLESHOOTING

UNIVERSAL BENCH TEST

CONFIGURATION

The components depicted in figure A represent the integral elements and interconnects necessary to effectively bench test the Cinematronics vector display video game system. The configuration is universal in that the game logic board A, display assembly B, and the power supply D are consistent from game to game. Audio board C varies in design for each new game though maintaining the pinout of its input power molex plug. Player control ribbon cable 3 terminates at the player control panel elements of each game (i.e. Joystick, Fire & Thrust buttons, Coin Acceptor Mechanism, etc.)

POWER INTERCONNECTS

The power supply D provides all voltages necessary for game operation.

Logic board drive is +5 volts ± 5% applied to pin 10 of the input power molex plug, & ground enters the logic board thru pin 4 to pins 1, 5, and 6. The logic board will free run in the game attract mode with proper power applied.

The audio board accepts +25 volts on pin4 and -25 volts applied thru pin 6 to pin 8. Ground enters pin 7 and is trace connected to speaker return pin 5. Pin 9 accepts +5 volts DC.

Power for the display is +25 volts thru pin 6 of its molex plug to pin 5 and -25 volts on pin 8. The CRT filament voltage of 6.3 V.A.C. enters the display electronics through pins 1 & 7 via a twisted pair of wires from the supply. A full wave rectified, unfiltered spot kill level of approximately +25 volts is applied to pin 14. The assembly is grounded thru pin 15 to pin 12.

SYSTEM TEST CONSIDERATIONS

As previously mentioned, the logic board A will free run in the particular game attract mode solely with +5 volt applied. Ribbon cables 1 & 2 are output lines and can be removed without affecting the free-run mode. Ribbon cable 3 is an input line and can also be removed for test purposes while free running.

The audio board C can be effectively diagnosed with proper power applied and a speaker. The logic board generates most sounds by grounding various control lines through ribbon cable 2. The cable can be removed and game sounds can be generated by tying these lines low temporarily with a jumper wire. Refer to the appropriate audio board schematic and theory of operation section.

The display assembly cannot be powered up without data cable 1 from the logic board connected. With the cable open or improper data being fed from the logic board, the circuit breakers CB1 & CB2 on the power supply will trip indicating a load in excess of 3a being drawn from the +25 and -25 volt lines. Testing of the monitor requires a functional logic board. While troubleshooting a no display condition, it is recommended to remove the 8 pin molded female plug from the neck of the CRT to protect the phosphor on the tube face from being burned by a high intensity spot.

TEST EQUIPMENT

For most test purposes, a wideband oscilloscope and a digital or analog multi-meter is adequate. Also, a tri-level logic probe for verifying the presence of digital information is recommended.

Testing and troubleshooting of the logic board is the least straightforward aspect of bench test. However, Cinematronics has

developed a logic board exerciser to be used in conjunction with a signature analyser that allows effective troubleshooting & repair with a minimum knowledge of microprocessor theory and operation. The exerciser puts a 4 bit alpha-numeric code on each IC leg of each chip on the CPU board which then can be probed & read with the signature analyser to verify proper operation. Contact the customer service department at Cinematronics for details.

TEST PROCEDURES

The first step in effective bench testing is to review the system theory of operation included in the manual. Discussed are principles from the mathematical concept of vector systems to the actual hardware techniques employed in generating a vector video game display.

For specific troubleshooting procedures, refer to the symptom-remedy diagnostic chart included in the manual.

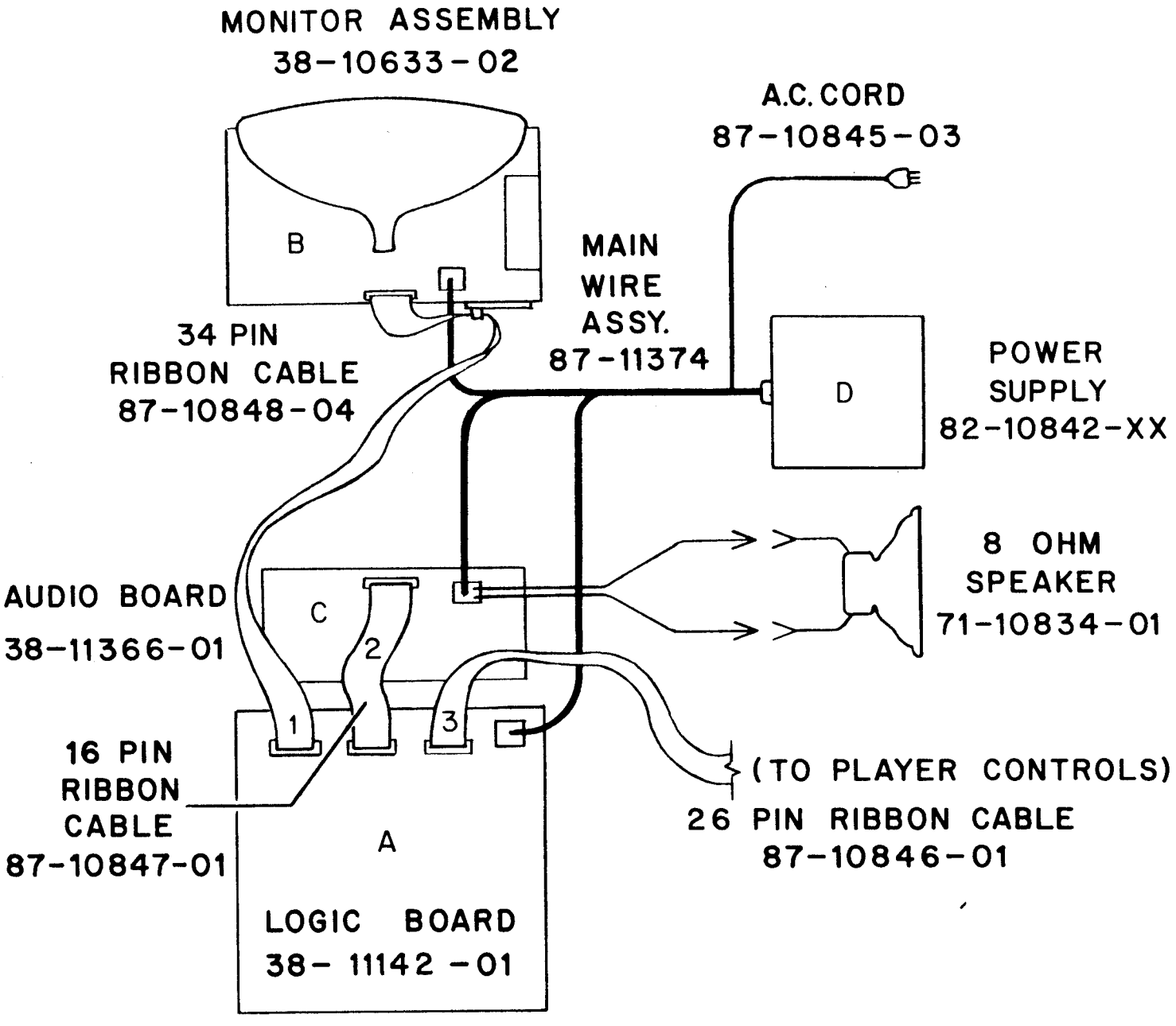

UNIVERSAL BENCH TEST CONFIGURATION

MONITOR PROBLEMS

Here is a systematic guide to trouble shooting a monitor that blows breakers. Monitor must be connected to a good CPU. Check for burned components. The first thing we want to do is be able to power up the monitor without blowing breakers - then do trouble shooting.

POWER OFF. Unplug yoke from monitor board. Unplug socket from CRT. POWER ON.

If breakers blow: POWER OFF. See 1.

If breakers hold: Check outputs of -15v, +15v, and +5v regulators. Output must be within ± 0.5 volt tolerance.

A. Use O-scope to check deflection circuits for proper signal. 1mv/div time base is a good scope setting. Between DAC-80 output and input of Q101 or Q201, signal amplitude is about ± 3 volts peak. DC component should be less than ± 200 mv. Too much DC component will trip breakers. If signal into Q101/Q201 is good, problem is in transistorized deflection amps. With yoke disconnected, a good amp will put out an odd looking "square wave", swinging between +25 volts. To check a bad deflection amp, check all transistors. Look for burned R118, R119, R113, R117 or R218, R219, R213, R217. R115, R116, R120, R121 may open with no burn marks. For test purposes, protection transistors Q106, Q107, Q206, Q207 may be removed from the circuit and amplifier can be powered up. Always replace protection transistors before returning monitor to normal service.

1. POWER OFF. Unplug heat sink wiring harnesses from monitor board. POWER ON.
Breakers blow: POWER OFF See 2.
Breakers hold: one or more of Q110, Q111, Q210, Q211 are shorted. Damage elsewhere is likely. Follow procedure at A.

2. Problem is most likely Video High Voltage module. Unplug from board and POWER ON. Breakers hold: replace or repair Video power supply. Breakers blow: Maybe a shorted tantalum capacitor. Or call us.

TABLE 7-1. TROUBLESHOOTING GUIDE

PROBLEM	PROBABLE SOLUTIONS
No Picture	Listen for audible "clatter" from the deflection yoke on the CRT neck. If the clatter is present, deflection circuitry is working and the problem is in the intensity circuit. No high voltage. If game audio is present, the CPU board is functional and the problem is in the monitor. If the audio is distorted or absent, the CPU board is suspect. If CPU board is equipped with red led near the input power plug, verify that it flashes once when power is applied and remains off thereafter. If no LED, verify that C8 pin 6 is constantly low with a voltmeter. Check the neck of the CRT for a glowing filament. If there is no glow, check the brown & black twisted pair of the CRT plug for 6.3 volts AC. Be sure all connections to the CPU board and monitor are firmly seated. Connect a scope to the yellow wire leading to the CRT connector. Set brightness full clockwise. There should be an 80-100 volt DC base with pulses dropping down to a 40 volt level. If no pulses, probe IC7 pin 4 with a scope and observe data pulses. If present, check Q2 & Q3 with an ohmeter or transistor tester. Check cathode of D5 for a full wave rectified, unfiltered voltage signal floating at +25 volts. Check seating of CRT plug. Remove and probe with scope to verify presence of proper signals.
Narrow Line on Display	Check IC1. Check for open yoke windings with ohmeter. Check for bad solder & crimp connections to yoke wires. Verify continuity between display board and heat sunk power transistors Q110, Q210, Q111 and Q211. Check Q110, Q210, Q111, Q211 with ohmeter or transistor tester. Inspect solder connections on circuit board molex connector socket pins.
Half Picture	Left Half: Check Q206, 208, 210 Right Half: Check Q207, 209, 211 Top Half: Check Q107, 109, 111 Bottom Half: Check Q106, 108, 110

TABLE 7-1. TROUBLESHOOTING GUIDE (Continued)

PROBLEM	PROBABLE SOLUTIONS
	Check solder connections on heat sink molex plugs J3 & J4. Check diodes CR109, 110, 111 Check diodes CR209, 210, 211 Check transistors Q105, Q205 Check resistors R116, R216.
No Brightness Control	Check intensity pot R111 for open wiper or internal short. Check for open capacitor C17. Check for bad solder connections to R111.
Picture on Display Jitters	Replace analog switch IC1. Check size pots R109 and R209 for wiper noise by turning briskly while observing the screen. Readjust for proper screen size. Check for bad solder connections on R109 & R209. Check DAC IC101 & IC201 for bad solder connections. Insure that all molex connectors are properly seated.
Suspect High Voltage too high/too low	An accurate High Voltage meter will read close to 16KV if high voltage is good. Self-contained HV meters vary widely in accuracy. If +90 and +400 volts out of high voltage supply are good, chances are 16KV is good. If +90 or +400 volts are bad, repair or replace high voltage supply.
Dotted Display	Check IC-7 pins 2, 4. Verify proper operation of IC1. Check for proper +25 and -25 volts DC. Check operation of DAC's IC101 and IC201. On logic board, check I 8 pin 2 for pulses. Verify presence at analog switch.
No Audio	Check for open speaker coil. Check transistors 2N6292 and 2N6107 and nearby output components on audio board with ohmeter or transistor checker. Check 7815 and 7915 outputs. Check for open wiper on volume control mounted on inside of coin door. Refer to audio board theory of operation and troubleshooting guide. Replace F2 on logic board.

TABLE 7-1. TROUBLESHOOTING GUIDE (Continued)

PROBLEM	PROBABLE SOLUTIONS
Coin Counter is Inoperative	Check 2N6292 transistor on logic board with ohmeter or transistor tester. Verify proper operation of A4 by grounding A4 pin 1. Coin counter should click. Disconnect coin counter molex connector. Measure DC voltage on red wire. Meter should read +25 volts DC.
Gives No Credits	Tie E4 pin 12 to ground. If credits fail to appear, replace E4. If credits appear, disconnect logic board ribbon connector J3. Measure +5 volts on A4 pins 1 & 5. If missing, replace pull up resistor pack C2. Alternately ground A4 pins 1 & 5. If credits appear, problem is in switches on coin door. Verify proper coin door microswitch operation. Reconnect J3. Observe A4 pins 3 & 6 alternately while depressing microswitch lever on coin mechanism. Pins 3 & 6 should change states. Replace A4. Replace F2 (74LS259) on logic board.
Player Control Button(s) Inoperative	Refer to player control schematic in APPENDIX. Verify with ohmeter proper closure of player control leaf blade switches. Remove J3 connector. Measure +5 volts on D4 - 1, 2, 3, 4, 12, 13, 14, 15. If missing, replace D4. Replace pull up resistor pack D2. Measure +5 volts on C4 - 1, 2, 3, 4, 12, 13, 14, 15. If missing, replace C4. Replace pull up resistor pack C2. Coin up a game and, with J3 disconnected, ground aforementioned pins on C4 & D4. If display responds problem is in continuity from J3 to player control switches.

SECTION 8

SUGGESTED PARTS FOR STOCK

The following parts fail most frequently:

MONITOR

LF13331	—	Analog switch
2N5876	—	PNP output transistor
2N5878	—	NPN output transistor
2N5320	—	PNP driver transistor
2N5322	—	NPN driver transistor
7406	—	IC inverter package
2N5550	—	NPN transistor 140 volt BVceo
7805	—	+ 5 volt regulator IC
7815	—	+ 15 volt regulator IC
7915	—	-15 volt regulator IC

CPU

74LS259/DM8334	—	IC 8 bit latch
74LS32	—	IC or gate
D ROM 1	—	IC PROM
20101 A2	—	IC RAM 256 x 4

AUDIO

2N6107	—	PNP output transistor
2N6292	—	NPN output transistor
TL081/LF351	—	IC op-amp
CA3080	—	IC transconduct.
74LS377	—	IC octal D flip-flop (also used in CPU)

The following parts don't fail frequently, but are not readily available local electronic supply houses:

MONITOR

DAC-80	—	digital to analog converter

CPU

Masked ROMS	—	set of four contain game program
D ROMS (1-6)	—	custom made for CPU
25LS181	—	ALU

SECTION 8
PARTS LIST

ITEM NO.	CINEMATRONICS PART NO.	DESCRIPTION	MFGR. PART NO.	QTY.
		CABINET ASSEMBLY		
1	20-11382-01	Grill, Speaker		1
2	25-10552-01	Bolt, Carriage	3/16-1 1/2"	
3	25-10568-01	Washer, Flat	#10-1/2"	
4	71-10834-01	Speaker		1
5	25-10558-01	Nut, Hex	#10-24	3
6	25-10572-01	Washer, Lock	#10-Internal	3
7	87-11374-01	Harness, Main Wire		1
8	25-10580-01	Ty Rap w/eyelet		9
9	01-10505-01	Florescent Lamp		1
10	25-10566-01	Screw, Wood	#8-5/8"	2
11	26-10588-01	Florescent Lamp Fix		2
12	01-10505-02	Florescent Lamp	Black Light	1
13	20-11401-01	CRT Mounting Rail		2
14	25-10558-01	Nut, Hex		4
15	82-10842-21	Power Supply	Condor Mod.	
16	82-10842-31	Power Supply	Data Power Mod.	
17	82-10842-40	Power Supply	Nat'l Power	
18	25-10553-01	Bolt, Carriage	3/16"	
19	15-11386-01	Backdrop		1
20	20-11376-01	Marquee, Plex Retain.	Upper	1
21	20-11377-01	Marquee, Plex Retain.	Lower	1
22	21-11384-02	Front Plexi	(Screened)	1
23	21-11385-02	Marquee Plexi	(Screened)	1
24	21-11395-01	Overlay		1
25	22-11394-01	Bezel, Cardboard		1
26	23-11152-01	Foam Tape		
27	25-10566-01	Screw, Wood	#8-5/8"	
28	32-11381-01	Cabinet w/back	Reflextive	1
29	34-10903-01	Braid, Flat		
30	35-10618-01	Term, Ring Tongue	8	
31	87-11161-02	Harness, Coin Door		1
32	20-10862-01	Tongue, Coin Box		1
33	20-10864-01	Handle, Coin Box		1
34	20-10871-01	Coin Box		1
35	20-10872-01	Cover, Coin Box		1
36	25-10990-01	Bolt, Carriage	3/16"-3/4"	1
37	90-11388-01	Glass, Solar Bronze		1

ITEM NO.	CINEMATRONICS PART NO.	DESCRIPTION	MFGR. PART NO.	QTY.
		SUB-ASSEMBLY		
1	20-10896-11	Coin Door w/lamp		1
2	87-11161-02	Harness, Coin Door		1
3	25-10579-01	Ty Rap	X	
4	25-10905-01	Cable Clamp 3/16"		3
5		Wire 22 GA		
6		Wire 22 GA		
7		Wire 22 GA		
8		Wire 22 GA		
9		Wire 22 GA		
10	Wire 22 GA			
11	35-10614-01	Molex, Male Pin	02-09-2118	X
12	35-10615-01	Molex, Female Pin	02-09-1118	X
13	41-xxxxx-01	Conn, Molex		1
14	87-11374-01	Mirror Upright	1	
15	25-10561-01	Nut, Wire	Ideal #73B	1
16	34-10608-01	Wire 18 GA Red		119¼"
17	34-10609-01	Wire 18 GA Blue		62¼"
18	34-10610-01	Wire 18 GA Black		188"
19	34-10906-01	Wire 22 GA Brn/Wt	Twisted	146¼"
20	34-10908-01	Wire 18 GA Orange		102¼"
21	34-11184-01	Wire 18 GA Blk/Wt	Stripe	43"
22	34-11185-01	Wire 18 GA Blk/Yel	Stripe	41 3/4"
23	34-11187-01	Wire 18 GA Red/Blk	Stripe	15"
24	34-11271-01	Wire 18 GA Blk/Wt	Twisted	146½"
25	34-11273-01	Wire 18 GA Green		85¾"
26	34-11407-01	Wire 18 GA Yellow	62¼"	
27	34-11408-01	Wire 18 GA Gray		40"
28	34-11409-01	Wire 18 GA GA Wt/Grn	Stripe	57"
29	34-11409-01	Wire 18 GA Violet		57"
30	34-11411-01	Wire 18 GA Wt/Blue	Stripe	57"
31	34-11412-01	Wire 18 GA Brown	64"	
32	34-11413-01	Wire 18 GA Blu/Yel	Stripe	15"
33	35-10614-01	Pin Male Molex	02-09-2118	30
34	35-10615-01	Pin Female Molex	02-09-1118	23
35	35-10617-01	Term, Female Q. Discon	.187-.032	2
36	20-11378-01	Player Cont'l Panel		1
37	22-11397-01	Control Pnl Decal	Lexan	1
38	25-10559-01	Nut, Pal	WICO#19-0254-01	6
39	25-10574-01	Washer, Lock	#6 External	2
40	34-10596-01	Wire Buss	22 AWG	
41	37-11197-01	Button Asy. Short	WICO#19-0255-01	6
42	41-10654-01	Conn, Insulated	26 Cir	1
43	41-10646-01	Wafer Fric Lock, 3CIR		1

ITEM NO.	CINEMATRONICS PART NO.	DESCRIPTION	MFGR. PART NO.	QTY.
44	80-10840-01	Distribution P.C.B.		1
45	87-11389-01	Harness, Cnt'l Panel		1
46	34-10597-01	Wire 22 GA Black		9¾"
47	34-10598-01	Wire 22 GA Green		13¼"
48	34-10599-01	Wire 22 GA Yellow		12 3/8"
49	34-10600-01	Wire 22 GA Violet		10 5/16"
50	34-10602-01	Wire 22 GA Orange		14 1/8"
51	34-10603-01	Wire 22 GA Gray		8 23/32"
52	34-10606-01	Wire 22 GA Red		11¼"
		MECHANICAL ASSEMBLY		
1	20-10522-01	Heat Sink	2	
2	25-10563-01	Machine Screw	6-32-½PNHDPH	8
3	45-10719-01	Washer, Greaseless		4
4	66-10822-01	Transistor	PNP 2N5876	2
5	66-10823-01	Transistor	NPN 2N5878	2
6	87-10873-01	Harness, Long H.S.		1
7	87-10874-01	Harness, Short H.S.		1
8	20-10525-01	Mounting Plate	Logic & Audio Brds	1
9	25-10563-01	Machine Screw	6-32-PNHDPH	9
10	25-10571-01	#6 Internal	9	
11	38-10626-01	Logic Board Assy.		1
12	87-10847-01	Ribbon Cable 16 Pin	Audio to Logic	1
13	87-10848-04	Ribbon Cable 34 Pin	W/3 Conn.	1
14	38-10633-02	Monitor Assembly		1
15	20-10528-01	Chassis	Display Bd Frame	1
16	20-10869-01	Bracket, CRT Mounting	Left Hand	1
17	20-10870-01	Bracket, CRT Mounting	Right Hand	1
18	25-10564-01	Screw, Sheet Metal	#6-½" Hex Hd	12
19	25-10565-01	Screw, Sheet Metal	#10-½" Hex Hd	4
20	25-10568-01	Washer, Flat	#10-½"	4
21	25-10569-01	Washer, Flat	#10-1"	4
22	38-10628-02	Display Board Assy.	Multi-Inten Mod	1
23	82-10841-01	Power Supply, Video	Keltron	
24	82-111083-03	Power Supply, Video	PTK HV Module	
		LOGIC P.C.B. ASSEMBLY		
1	01-10500-01	Tubing, Teflon	22 GA Thin	25'
2	35-10616-01	Test Points		6

ITEM NO.	CINEMATRONICS PART NO.	DESCRIPTION	MFGR. PART NO.	QTY.
3	35-10965-01	Jumpers, 16 Pin		2
4	36-10619-01	Socket, Dip 14 Pin		2
5	36-10620-01	Socket, Dip 16 Pin		4
6	36-10621-01	Socket, Dip 25 Pin		7
7	37-10625-01	7 Pole Dip Switch	JS8722-01	1
8	38-11405-01	E-Prom Kit (2732)	Solar Quest	4
9	41-10652-01	Male Header 16 Pin	609-1622M	1
10	41-10653-01	Male Header 26 Pin	609-2622M	1
11	41-10654-01	Male Header 34 Pin	609-3422M	1
12	41-10655-01	Conn. Molex 12 Cir	09-18-5127	1
13	44-10667-01	IC	2101A2	3
14	44-10671-01	IC	7425	1
15	44-10675-01	IC	74265	1
16	44-10676-01	IC	25LS181	3
17	44-10677-01	IC	74LS00	4
18	44-10678-01	IC	74LS00	4
19	44-10679-01	IC	74LS00	3
20	44-10680-01	IC	74LS00	1
21	44-10681-01	IC	74LS10	3
22	44-10682-01	IC	74LS27	3
23	44-10683-01	IC	74LS32	4
24	44-10684-01	IC	74LS75	2
25	44-10685-01	IC	74LS85	3
26	44-10686-01	IC	74LS86	1
27	44-10687-01	IC	74LS107	7
28	44-10688-01	IC	74LS151	4
29	44-10689-01	IC	74LS157	8
30	44-10690-01	IC	74LS163	9
31	44-10691-01	IC	74LS164	1
32	44-10692-01	IC	74LS194	9
33	44-10693-01	IC	74LS257	3
34	44-10694-01	IC	74LS259	1
35	44-10695-01	IC	74LS298	2
36	44-10696-01	IC	74LS377	6
37	44-10697-01	IC	74LS393	2
38	44-10698-01	IC	74S00	2
39	44-10699-01	IC	74S02	1
40	44-10700-01	IC	74S04	2
41	44-10701-01	IC	74S08	1
42	44-10702-01	IC	74S10	1
43	44-10703-01	IC	74S32	2
44	44-10704-01	IC	74S113	2
45	44-10705-01	IC	74S158	1
46	44-10706-01	IC	74S182	1
47	44-10707-01	IC, Drom 1	2085	1
48	44-10708-01	IC, Drom 2	2086	1

ITEM NO.	CINEMATRONICS PART NO.	DESCRIPTION	MFGR. PART NO.	QTY.
49	44-10709-01	IC, Drom 3	2087	1
50	44-10710-01	IC, Drom 4	2088	1
51	44-10711-01	IC, Drom 5	2089	1
52	44-10712-01	IC, Drom 6	2090	1
53	53-10726-01	Resistor, ¼W 5% C	100 OHM	1
54	53-10731-01	Resistor, ¼W 5% C	330 OHM	2
55	53-10732-01	Resistor, ¼W 5% C	470 OHM	1
56	53-10734-01	Resistor, ¼W 5% C	1K OHM	12
57	53-10738-01	Resistor, ¼W 5% C	2.2K OHM	1
58	53-10746-01	Resistor, ¼W 5% C	10K OHM	2
59	53-10753-01	Resistor, ¼W 5% C	30K OHM	1
60	53-10762-01	Resistor, ¼W 5% C	560K OHM	1
61	53-10779-01	Resistor, Dip Pak	1K OHM	2
62	63-10783-01	Capacitor, Disk	.02MF 50V	58
63	63-10785-01	Capacitor, Disk	680PF 100V	1
64	63-10808-01	Capacitor, Dip Tant	3.3MF 35V	1
65	63-10810-01	Capacitor, Dip Tant	22MF 35V	1
	63-10995-01	Or Capacitor, Elect Rad	100MF 50V	1
66	65-10811-01	Diode	1N914B	2
67	65-10814-01	L.E.D	TIL220	1
68	66-10816-01	Transistor	2N3904	2
69	66-10825-01	Transistor	2N6292	1
70	69-10833-01	Crystal, 20 MHZ		1
71	80-10837-01	P.C Board		1
72	34-10594-01	Wire 30 GA	Blue Kynar	2'
		DISPLAY P.C.B. ASSEMBLY		
1	25-10582-01	Shrink Tubing	3/16" Roll Stock	14"
2	25-10582-01	Shrink Tubing	3/16" 2" Lengths	2
3	25-10582-03	Shrink Tubing	3/16" 3" Lengths	2
4	34-10608-02	Wire 18 GA Red	9" Lengths	2
5	35-11205-01	Terminal, Ring Tongue	22GA (A3651-194)	1
6	36-10622-01	Socket, CRT		1
7	01-10501-01	Tubing, Teflon	22 GA Thin	.5'
8	01-10506-01	Neon Lamp	NE-2	2
9	20-10523-01	Heat Sink, Thrmaloy	2230B	6
10	20-10524-01	Heat Sink, Thrmaloy	6045B	1
11	23-10548-01	Thermal Compound	DOW 340	
12	23-10996-01	Adhesive, Silicone	RTV	
13	15-10579-01	TV Raps	T-18R	2
14	25-10596-01	Wire 22 GA/TC		
15	34-10604-02	Wire 22 GA Brown	4" Lengths	1
16	34-10604-06	Wire 22 GA Brown	3" Lengths	2
17	34-10604-07	Wire 22 GA Brown	2¼" Lengths	1
18	34-10608-02	Wire 18 GA Red	9" Lengths	2

ITEM NO.	CINEMATRONICS PART NO.	DESCRIPTION	MFGR. PART NO.	QTY.
19	34-10609-02	Wire 18 GA Blue	10" Lengths	1
20	34-10610-03	Wire 18 GA Black	5½" Lengths	1
21	35-10613-01	Pin, Molex Sldr TL	02-09-2134	8
22	36-10620-01	Socket, 16 Pin		2
23	36-10621-01	Socket, 24 Pin		2
24	41-10654-01	Male Header 34 Pin		1
25	41-10660-01	Conn, Molex 15 Cir	03-09-1152	1
26	41-10661-01	Conn, Molex 6 Cir	09-18-5061	1
27	41-10662-01	Conn, Molex 6 Cir	09-18-5062	1
28	41-10663-01	Conn, Molex 6 Cir	09-18-5069	2
29	44-10669-01	IC	7406	1
30	44-10672-01	IC	7805C	1
31	44-10673-01	IC	7815C	1
32	44-10674-01	IC	7915C	1
33	44-10714-01	IC & (See Note #1)	DAC 80 (bbrown)	2
34	44-10715-01	IC (See Note#2)	LF 13331	1
35	44-10718-01	IC	TL081P	2
36	51-10720-01	Pot, Trim	100 OHM	2
37	51-10721-01	Pot, Trim	5K OHM	2
38	51-10722-01	Pot, 10K	JA1N056103UA	1
39	53-10723-01	Resistor, ¼W 5%C	15 OHM	2
40	53-10724-01	Resistor, ¼W 5% C	33 OHM	2
41	53-10725-01	Resistor, ¼W 5% C	47 OHM	6
42	53-10726-01	Resistor, ¼W 5% C	100 OHM	4
43	53-10729-01	Resistor, ¼W 5% C	200 OHM	2
44	53-10731-01	Resistor, ¼W 5% C	330 OHM	1
45	53-10732-01	Resistor, ¼W 5% C	470 OHM	5
46	53-10733-01	Resistor, ¼W 5% C	820 OHM	4
47	53-10734-01	Resistor, ¼W 5% C	1K OHM	2
48	53-10736-01	Resistor, ¼W 5% C	1.8K OHM	1
49	53-10738-01	Resistor, ¼W 5% C	2.2K OHM	1
50	53-10740-01	Resistor, ¼W 5% C	3K OHM	3
51	53-10744-01	Resistor, ¼W 5% C	5.6K OHM	2
52	53-10746-01	Resistor, ¼W 5% C	10K OHM	4
53	53-10758-01	Resistor, ¼W 5% C	68K OHM	1
54	53-10766-01	Resistor, ½W 5% C	47 OHM	4
55	53-10767-01	Resistor, ½W 5% C	2.2K OHM	1
56	53-10768-01	Resistor, ½W 5% C	8.2K OHM	4
57	53-10769-01	Resistor, ½W 5% C	10K OHM	1
58	53-10770-01	Resistor, 1W 5% C	2.7 OHM	12
59	53-10771-01	Resistor, 1W 5% C	360 OHM	2
60	53-10773-01	Resistor, 2W 5% C	100 OHM	1
61	53-10774-01	Resistor, 3W 5% C	.18 OHM	4
62	53-11204-01	Resistor, ½W 1% F	1.43K OHM	1
63	53-10777-01	Resistor, ¼W 1% F	2.1K OHM	1
64	53-10778-01	Resistor, ¼W 1% F	10K OHM	2
65	53-11123-01	Resistor, (Unprepped)	0 OHM	15
66	53-11367-01	Resistor, ¼W 5% C	13K OHM	1

ITEM NO.	CINEMATRONICS PART NO.	DESCRIPTION	MFGR. PART NO.	QTY.
67	63-10781-01	Capacitor, Disk	.005MF 50V	2
68	63-10784-01	Capacitor, Disk	.1MF 50V	6
69	63-10790-01	Capacitor, Elect. AX	47MF 50V	2
70	63-10799-01	Capacitor, Film	.33MF 35V	1
71	63-10802-01	Capacitor, Polycarb	.022MF 200 V	2
72	63-10805-01	Capacitor, Dip Tant	.47MF 35V	1
73	63-10806-01	Capacitor, Dip Tant	1MF 35V	3
74	63-10807-01	Capacitor, Dip Tant	2.2MF 35V	6
75	63-10943-01	Capacitor, Elect. Rad.	4.7 MF 35V	1
76	63-10948-01	Capacitor, Film	.1MF 100V	2
77	65-10811-01	Diode	1N914B	11
78	65-10812-01	Diode	1N4003	31
79	66-10815-01	Transistor	2N2102	4
80	66-10816-01	Transistor	2N3904	3
81	66-10817-01	Transistor	2N3906	2
82	66-10818-01	Transistor	2N5210	7
83	66-10819-01	Transistor	2N5320	2
84	66-10820-01	Transistor	2N5322	4
85	80-10902-01	P.C.Board		1
86	87-11387-01	Harness, Multi-Inten.		1
		NOTE #1: Beckman DAC and Burr-Brown DAC are not directly interchangeable. When Beckman 7580 vs. DACS are used, substitute as follows: 1. Change Resistor, ¼W 1% film 1.43K OHM 53-10776-01 to Resistor, ¼W 1% film 11.0K OHM 53-11004-01 2. Change Resistor, ¼W 1% film 2.1K OHM 53-10777-01 to Resistor, ¼W 1% film 7.5K OHM 53-11005-01		
		NOTE #: In the absence of the analog switch (44-10715-01), substitute the following items: P.C. Board 80-11214-01 1 Ribbon Cable 87-10986-01 1 Socket, 16 Pin 36-10620-01 1 IC 44-10990-01 HI-5045 1 or 44-10991-01 HI-5045 1 Diode 65-10992-01 1N5231 1 Resistor, ¼W 5% C 53-10734-01 1K OHM 2 Capacitor, Elect. Rad. 63-10993-01 47MF 50V 2		
87	63-10784-01	Capacitor, Disk	.1MF 50V	1

ITEM NO.	CINEMATRONICS PART NO.	DESCRIPTION	MFGR. PART NO.	QTY.
		MULTI-LEVEL INTENSITY ASSEMBLY		
1	41-10654-01	Connector, 34 Pin		1
2	41-10656-01	Connector, 9 Pin	Wafercon	1
3	44-10669-01	IC	7406	2
4	44-10670-01	IC	7414	1
5	44-10696-01	74LS377	1	
6	51-11403-01	Pot, 50K OHM Trim	3386-T1-503	1
7	53-10732-01	Resistor, ¼W 5% C	470 OHM	1
8	53-10738-01	Resistor, ¼W 5% C	2.2K OHM	1
9	53-10746-01	Resistor, ¼W 5% C	10K OHM	1
10	53-10748-01	Resistor, ¼W 5% C	15K OHM	1
11	53-10758-01	Resistor, ¼W 5% C	68K OHM	1
12	53-10779-01	Resistor, Dip Pak	1K OHM	1
13	53-10919-01	Resistor, ¼W 5% C	4.3K OHM	1
14	53-10923-01	Resistor, ¼W 5% C	18K OHM	1
15	53-10925-01	Resistor, ¼W 5% C	36K OHM	1
16	53-10927-01	Resistor, ¼W 5% C	91K OHM	1
17	53-11313-01	Resistor, ¼W 5% C	9.1K OHM	1
18	63-10780-01	Capacitor, Disk	470PF	1
19	63-10784-01	Capacitor, Disk	1MF 50V	5
20	63-10944-01	Capacitor, Elect.Rad	100MF 35V	1
21	63-11371-01	Capacitor, M.Film	.001MF 50V	1
22	65-10811-01	Diode	1N914	6
23	65-10912-01	Diode	1N5236	6
24	65-11347-01	Diode	MR818	6
25	66-10821-01	Transistor	2N5550	7
26	80-11375-01	P.C.B. (Board only)	Multi-Inten.	1
		AUDIO P.C.B. ASSEMBLY		
1	20-10520-01	Heat Sink, Therm	6071B	4
2	20-10521-01	Heat Sink, Therm	6072B	
3	23-10548-01	Thermal Compound	DOW 340	
4	25-10556-01	Hex Nut	4-40	6
5	25-10570-01	Lockwasher	#4 Internal	6
6	25-10974-01	Machine Screw	4-40-3/8PNHDPH	6
7	41-10652-01	Header, 16 Pin	609-1622 M	1
8	41-10656-01	Conn, Molex 9 Cir	09-18-5094	1
9	44-10670-01	IC	7414	2
10	44-10673-01	IC	7815	1
11	44-10674-01	IC	7915	1
12	44-10678-01	IC	74LS02	1
13	44-10686-01	IC	74LS86	1

ITEM NO.	CINEMATRONICS PART NO.	DESCRIPTION	MFGR. PART NO.	QTY.
14	44-10687-01	IC	74LS107	2
15	44-10690-01	IC	74LS163	6
16	44-10691-01	IC	74LS164	5
17	44-10696-01	IC	74LS377	3
18	44-10697-01	IC	74LS393	3
19	44-10700-01	IC	74S04	1
20	44-10704-01	IC	74S113	1
21	44-10713-01	IC	CA3080E	4
22	44-10713-02	IC (Special)	CA3080A	2
23	44-10716-01	IC	LM555	2
24	44-10718-01	IC	TL081P	12
25	44-10913-01	IC	LM566	1
26	44-11028-01	IC	74LS74	5
27	44-11031-01	IC (Sub for LS163)	74LS161	0
28	53-10726-01	Resistor, 1/4W 5% C	100 OHM	4
29	53-10727-01	Resistor, 1/4W 5% C	150 OHM	2
30	53-10729-01	Resistor, 1/4W 5% C	200 OHM	4
31	53-10731-01	Resistor, 1/4W 5% C	330 OHM	2
32	53-10734-01	Resistor, 1/4W 5% C	1K OHM	19
33	53-10737-01	Resistor, 1/4W 5% C	2K OHM	4
34	53-10739-01	Resistor, 1/4W 5% C	2.7K OHM	12
35	53-10743-01	Resistor, 1/4W 5% C	4.7K OHM	23
36	53-10745-01	Resistor, 1/4W 5% C	8.2K OHM	3
37	53-10746-01	Resistor, 1/4W 5% C	10K OHM	4
38	53-10747-01	Resistor, 1/4W 5% C	12K OHM	11
39	53-10748-01	Resistor, 1/4W 5% C	15K OHM	2
40	53-10749-01	Resistor, 1/4W 5% C	20K OHM	6
41	53-10750-01	Resistor, 1/4W 5% C	22K OHM	2
42	53-10751-01	Resistor, 1/4W 5% C	24K OHM	1
43	53-10753-01	Resistor, 1/4W 5% C	30K OHM	1
44	53-10754-01	Resistor, 1/4W 5% C	39K OHM	10
45	53-10756-01	Resistor, 1/4W 5% C	47K OHM	2
46	53-10764-01	Resistor, 1/4W 5% C	1M OHM	5
47	53-10765-01	Resistor, 1/4W 5% C	1.5 OHM	1
48	53-10914-01	Resistor, 1/4W 5% C	390 OHM	5
49	53-10921-01	Resistor, 1/4W 5% C	6.8K OHM	1
50	53-10923-01	Resistor, 1/4W 5% C	18K OHM	1
51	53-10925-01	Resistor, 1/4W 5% C	36K OHM	1
52	53-10926-01	Resistor, 1/4W 5% C	51K OHM	5
53	53-10928-01	Resistor, 1/4W 5% C	100K OHM	10
54	53-10931-01	Resistor, 1/4W 5% C	200K OHM	2
55	53-10932-01	Resistor, 1/4W 5% C	240K OHM	1
56	53-10933-01	Resistor, 1/4W 5% C	270K OHM	1
57	53-10934-01	Resistor, 1/4W 5% C	300K OHM	1
58	53-10935-01	Resistor, 1/4W 5% C	360K OHM	1
59	53-10936-01	Resistor, 1/4W 5% C	390K OHM	2
60	53-11004-01	Resistor, 1/4W 5% C	11K OHM	1
61	53-11002-01	Resistor, 5W	.51 OHM	2

ITEM NO.	CINEMATRONICS PART NO.	DESCRIPTION	MFGR. PART NO.	QTY.
62	53-11312-01	Resistor, ¼W 5% C	120K OHM	2
63	53-11314-01	Resistor, ¼W 5% C	10M OHM	2
64	53-11367-01	Resistor, ¼W 5% C	13K OHM	1
65	53-11368-01	Resistor, ¼W 5% C	75K OHM	2
66	63-10780-01	Capacitor, Disk	470PF 50V	3
67	63-10781-01	Capacitor, Disk	.005MF 50V	1
68	63-10782-01	Capacitor, Disk	.01MF 50V	2
69	63-10784-01	Capacitor, Disk	.1MF 50V	48
70	63-10785-01	Capacitor, Disk	680PF 100V	1
71	63-10788-01	Capacitor, Elect. Rad.	25MF 50V	5
72	63-10940-01	Capacitor, Disk	.001MF 50V	1
73	63-10941-01	Capacitor, Elect.Rad.	2.2MF 35V	3
74	63-10942-01	Capacitor, Elect.Rad.	3.3MF 35V	1
75	63-10943-01	Capacitor, Elect.Rad.	4.7MF 35V	1
76	63-10947-01	Capacitor, Film	.01MF 100V	2
77	63-10948-01	Capacitor, Film	.1MF 100V	6
78	63-10949-01	Capacitor, Film	.22MF 100V	2
79	63-10950-01	Capacitor, Film	.33MF 100V	2
80	63-10951-01	Capacitor, Film	.47MF 100V	1
81	63-10952-01	Capacitor, Film	.68MF 100V	2
82	63-11127-01	Capacitor, Elect.Rad.	1MF 50V	3
83	63-11393-01	Capacitor, Silver Mic	330PF 50V	2
84	63-11371-01	Capacitor, Film	.001MF 50V	1
85	65-10811-01	Diode	1N914B	2
86	65-10812-01	Diode	1N4003 Plast	6
87	65-10813-01	Diode (Zener)	1N5240 10V	2
88	66-10816-01	Transistor	2N3904	3
89	66-10817-01	Transistor	2N3906	18
90	66-10824-01	Transistor	2N6107	1
91	66-10825-01	Transistor	2N6292	1
92	69-10833-01	Crystal	20MHZ	1
93	80-11366-01	P.C. Board		1

APPENDIX A

Assembly Drawings
Schematics
and
Wiring Diagrams

TABLE OF CONTENTS

ASSEMBLY DRAWINGS
SCHEMATICS
AND
WIRING DIAGRAMS

1. CABINET DRAWING
2. WIRE LIST MIRROR UPRIGHT
3. POWER SUPPLY PINOUT ILLUSTRATION
4. CONDOR POWER SUPPLY SCHEMATIC
5. NATIONAL POWER TECHNOLOGY POWER SUPPLY SCHEMATIC
6. PLAYER CONTROL AND COIN MECHANISM WIRING DIAGRAM
7. CPU BOARD SCHEMATIC
8. CPU BOARD MAJOR COMPONENT DRAWING
9. CPU BOARD ILLUSTRATION
10. DISPLAY BOARD SCHEMATIC
11. DISPLAY BOARD ASSEMBLY DRAWING
12. MONITOR ASSEMBLY DIAGRAM
13. DISPLAY BOARD CONNECTORS AND ADJUSTMENTS DRAWING
14. HEAT SINK ILLUSTRATION
15. HEAT SINK ASSEMBLY
16. AUDIO BOARD SCHEMATIC
17. AUDIO BOARD ASSEMBLY DRAWING
18. 64 LEVEL INTENSITY SCHEMATIC
19. 64 LEVEL INTENSITY ASSEMBLY DRAWING

PROPRIETARY
THIS DOCUMENT IS THE PROPERTY OF CINEMATRONICS INC AND IS NOT TO BE REPRODUCED OR DISTRIBUTED WITHOUT WRITTEN AUTHORIZATION OF CINEMATRONICS INC

REVISIONS

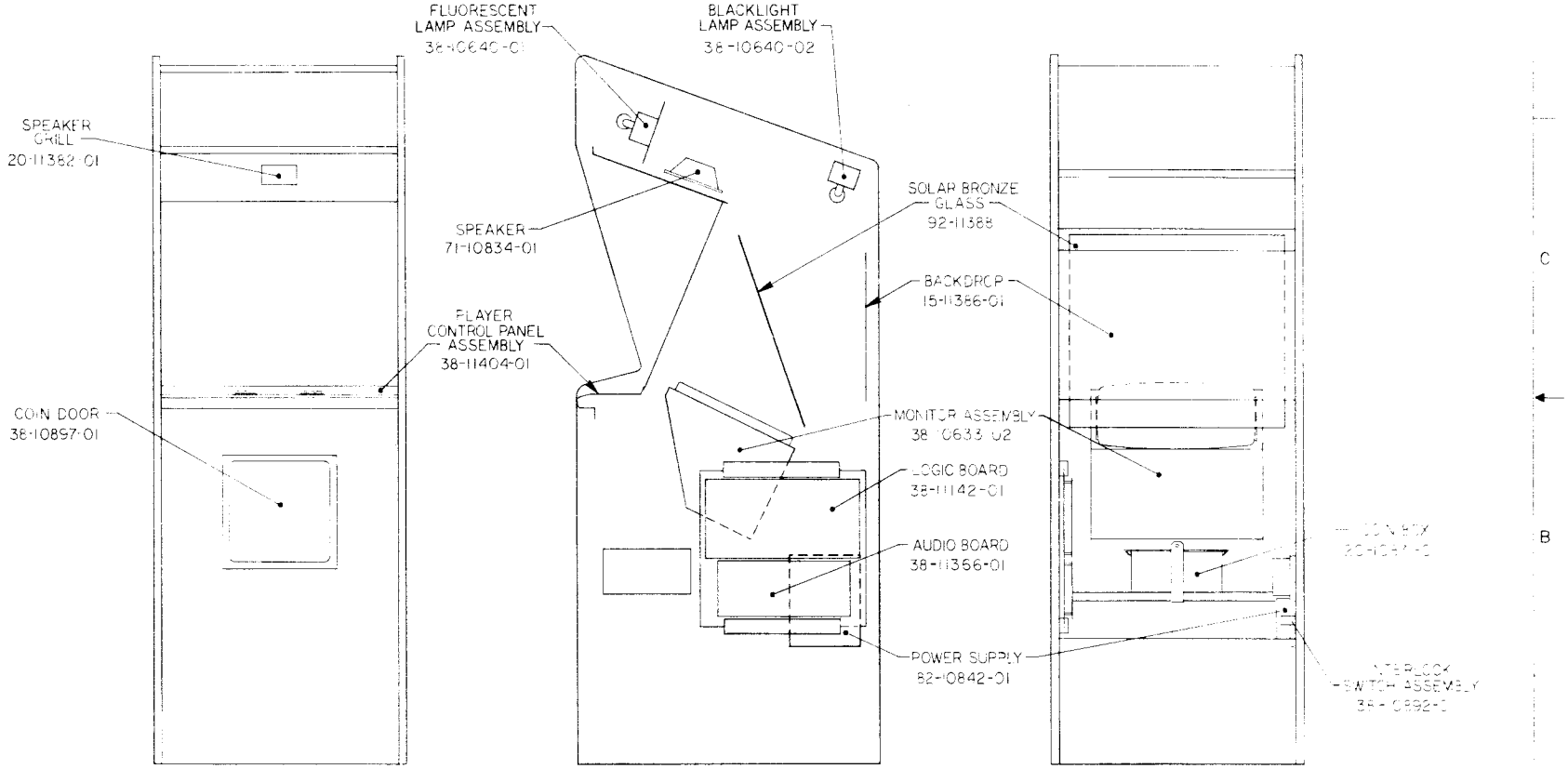

NOTES UNLESS OTHERWISE SPECIFIED

MATERIAL	DRAWN BY	DATE
	PROJECT ENGR	DATE
	RELEASE APPROV	DATE
FINISH	DO NOT SCALE DWG	
	TOLERANCE UNLESS OTHERWISE SPECIFIED	
	PROJECTION	SCALE NONE

CINEMATRONICS

DWG TITLE CABINET, MIRROR UPRIGHT

MODEL NO | DWG SIZE D | DWG NO | REV

CODE IDENT | SHEET OF

A-1

PROPRIETARY
THIS DOCUMENT IS THE PROPERTY OF CINEMATRONICS INC AND IS NOT TO BE REPRODUCED OR DISTRIBUTED WITHOUT WRITTEN AUTHORIZATION OF CINEMATRONICS INC.

REVISIONS

REV	DESCRIPTION	DATE	APPROVED

		TO	COLOR	AWG	PIN	LENGTH	REMARKS
H1	H1-1	LAMP	BLACK	18	M	69¾	TWST PAIR
POWER SUPPLY	H1-2	LAMP	WHITE	18	M		
MOLEX	H1-3	LAMP	BLACK	18	M	76¾	TWIST PAIR
03-09-1042	H1-4	LAMP	WHITE	18	M		
	H2-1	H9 GRN	GREEN		M		
	H2-2	H9 WHT	WHITE		M		
	H2-3	H8 N.O.	RED/BLK	18	M	15"	
POWER SUPPLY H2	H2-4	H10-7	BROWN	18	M	84	TWIST PAIR 6.3 VAC
	H2-5	H10-8	WHITE	18	M		
	H2-4	H3-1	BROWN	18	M	62¼	TWIST PAIR
	H2-5	H3-7	WHITE	18	M		6.3 VAC
	H2-6	H3-14	YELLOW	18	M	62¼	SPOT KILL
MOLEX 03-09-1122	H2-7	H3-6	RED	18	M	62¼	+25
	H2-7	H4-4	GRAY	18	M	40"	+25
	H2-8	H3-8	BLUE	18	M	62¼	-25
	H2-8	H4-6	BLUE	18	M	40"	-25
	H2-5	H3-13	ORANGE	18	M	62¼	+5
	H2-9	H4-9	ORANGE	18	M	40"	+5
	H2-10	H6-10	ORANGE	18	M	43"	+5
	H2-11	H3-15	BLACK	18	M	62¼	GND
	H2-11	H4-7	BLACK	18	M	40"	GND
	H2-12	H6-4	BLK/WHT	18	M	43"	GND
	H3-1	H2-4	BROWN		F		REF 6.3 VAC
DISPLAY H3	H3-2						NOT USED
	H3-3						NOT USED
	H3-4						NOT USED
	H3-5						NOT USED
MOLEX 03-09-2153	H3-6	H2-7	RED		F		REF +25
	H3-7	H2-5	WHITE		F		REF 6.3 VAC
	H3-8	H2-8	BLUE		F		REF -25
	H3-9						NOT USED
	H3-10						NOT USED
	H3-11						NOT USED
	H3-12	H6-5	BLK/YEL	18	F	40¾	GND
	H3-13	H2-9	ORANGE		F		REF +5
	H3-14	H2-6	YELLOW		F		REF SPOT KILL
	H3-15	H2-11	BLACK		F		REF GND

CONNECTOR	FROM	TO	COLOR	AWG	PIN	LENGTH	REMARKS
	H4-1	H10-1	WHT/GRN	18	M	45¼	VOLUME
AUDIO	H4-2	SPEAKER	GREEN	18	F	85¾	SEE NOTE 6
	H4-3	H10-5	RED	18	F	45¼	VOLUME
H4	H4-4	H2-7	GRAY		F	40"	REF +25
	H4-4	H10-4	VIOLET	18	F	45¼	
MOLEX	H4-5	SPEAKER	BLACK	18	F	85¾	SEE NOTE 6
03-09-	H4-6	H2-8	BLUE		F		REF -25
1093	H4-7	H2-11	BLACK		F		REF GND
	H4-8	H10-6	WHT/BLU	22	F	45¼	VOLUME
	H4-9	H2-9	ORANGE		F		REF +5
	H6-1						NOT USED
LOGIC	H6-2						NOT USED
	H6-3	H10-3	BROWN	18	F	84	METER
H-6	H6-4	H2-12	BLK/WHT		M		REF GND
	H6-5	H3-12	BLK/YEL		F		REF GND
MOLEX	H6-6						NOT USED
03-09-	H6-7						NOT USED
1122	H6-8						NOT USED
	H6-9						NOT USED
	H6-10	H2-10	ORANGE		F		REF +5
	H6-11						NOT USED
	H6-12						NOT USED
INTERLOCK H8	H8 COM	H9 BLK	BLU/YEL	18	Q	5	
	H8 N.O.	H2-3	RED/BLK		Q	5	
AC LINE CORD H9	H9 GRN	H2-1		18x3	M		96" LONG W/PLUG
	H9 WHT	H2-2			M		
	H9 BLK	H8 COM			WN		
	H10-1	H4-1	WHT/GRN		F		3 WIRE TWST
COIN DOOR H10	H10-2						NOT USED
	H10-3	H6-3	BROWN		M		REF METER
	H10-4	H4-4	VIOLET		M		REF +25
MOLEX	H10-5	H4-3	RED		M		3 WIRE TWST
03-09-	H10-6	H4-8	WHT/BLU		M		
1093	H10-7	H2-4	BROWN	18	F		REF 6.3 VAC
	H10-8	H2-5	WHITE	18	F		REF 6.3 VAC
	H10-9 NOT USED						

3. M - MALE PIN 02-09-2118
2. WN - WIRE NUT CONNECTION
1. TWISTED WIRE LENGTHS ARE AFTER TWISTING 1 PER INCH

7. CONN. H5, H7 OMITTED
6. OTHER END TERMINATED W/Q (NOTE 5)
5. Q - FEMALE QUICK DISCONNECT
4. F - FEMALE SOCKET 02-09-2118

NOTES: UNLESS OTHERWISE SPECIFIED

DRAWN BY	DATE	CINEMATRONICS	10 Ca 90 Ga 92020
PROJECT ENGR	DATE	DWG TITLE	
RELEASE APPROV	DATE		
DO NOT SCALE DWG			
TOLERANCE UNLESS OTHERWISE SPECIFIED		MODEL NO	DWG SIZE C
PROJECTION	SCALE	DWG NO	88-1374-01
FINISH		CODE IDENT	SHEET 1 OF 1

PROPRIETARY
THIS DOCUMENT IS THE PROPERTY OF CINEMATRONICS INC. AND IS NOT TO BE REPRODUCED OR DISTRIBUTED WITHOUT WRITTEN AUTHORIZATION OF CINEMATRONICS INC.

REVISIONS			
REV	DESCRIPTION	DATE	APPROVED

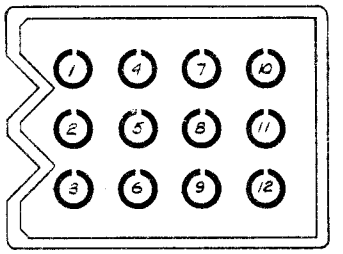

J1

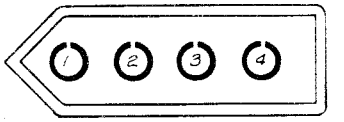

J2

J1 CONNECTOR DATA		
PIN NO.	WIRE COLOR	FUNCTION
J1-1	GRN	CHASSIS GND
J1-2	WHT	TXFMR LUG # 3
△1 J1-3	RED/BLK	TXFMR LUG # 1
J1-4	BROWN (2)	6.3VAC GND
J1-5	WHITE (2)	6.3VAC
△2 J1-6	YEL	SPOT KILL (25UNF)
△3 J1-7	RED/GRAY	+25V
△4 J1-8	BLU (2)	-25V
J1-9	ORG (2)	+5V
J1-10	ORG	+5V
J1-11	BLK (2)	+5V RETURN
J1-12	BLK/WHT	±25V RETURN

△1 3AMP INLINE FUSE.

△2 .5AMP INLINE FUSE.

△3 3AMP INLINE CIRCUIT BREAKER CB 1.

△4 3AMP INLINE CIRCUIT BREAKER CB 2.

J2 CONNECTOR DATA		
PIN NO.	WIRE COLOR	FUNCTION
J2-1	BLACK	TXFMR LUG # 1
J2-2	WHITE	TXFMR LUG # 3
J2-3	BLACK	TXFMR LUG # 2
J2-4	WHITE	TXFMR LUG # 4

POWER SUPPLY CONECTORS
BOTH J1 & J2 AS VIEWED FROM THE FRONT OF POWER SUPPLY.

NOTES: UNLESS OTHERWISE SPECIFIED

MATERIAL:	DRAWN BY: [illegible]	DATE: [illegible]	CINEMATRONICS INC El Cajon Ca 92020
	PROJECT ENGR: [illegible]	DATE: [illegible]	
FINISH: BREAK ALL SHARP EDGES AND DEBURR ALL HOLES.	RELEASE APPROV: [illegible]	DATE: [illegible]	DWG TITLE: POWER SUPPLY PINOUT ILLUSTRATION
	DO NOT SCALE DWG		
	TOLERANCE: UNLESS OTHERWISE SPECIFIED		MODEL NO. / DWG SIZE C / DWG NO 72-0877-03 / REV
	PROJECTION	SCALE	CODE IDENT / SHEET OF

PROPRIETARY
THIS DOCUMENT IS THE PROPERTY OF CINEMATRONICS INC. AND IS NOT TO BE REPRODUCED OR DISTRIBUTED WITHOUT WRITTEN AUTHORIZATION OF CINEMATRONICS INC.

REVISIONS			
REV	DESCRIPTION	DATE	APPROVED

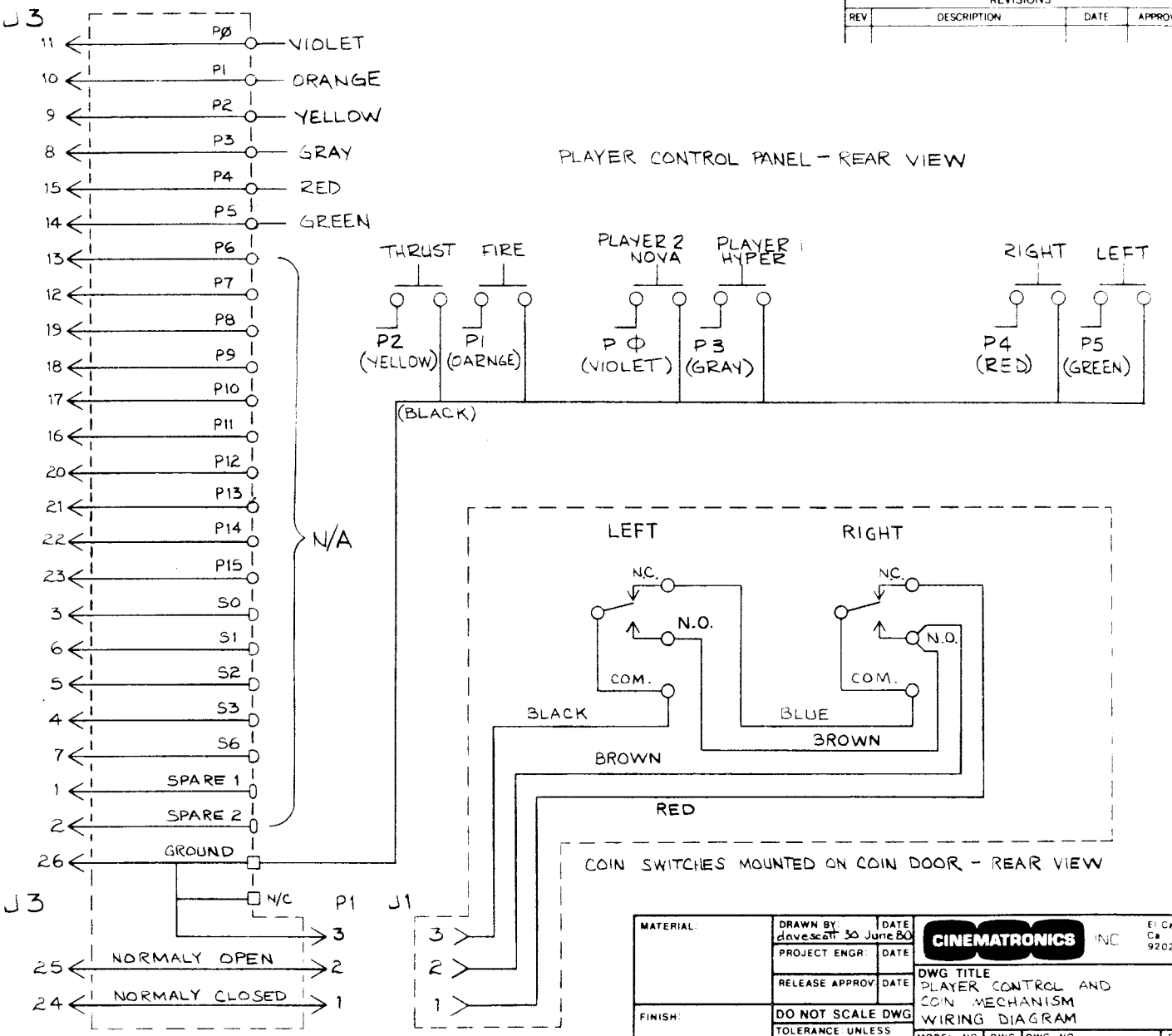

NOTES: UNLESS OTHERWISE SPECIFIED

MATERIAL:	DRAWN BY: davescott 30 June 80	DATE	CINEMATRONICS INC El Cajon Ca 92020
	PROJECT ENGR:	DATE	
	RELEASE APPROV:	DATE	DWG TITLE: PLAYER CONTROL AND COIN MECHANISM WIRING DIAGRAM
FINISH:	DO NOT SCALE DWG		
	TOLERANCE UNLESS OTHERWISE SPECIFIED		MODEL NO. / DWG SIZE C / DWG NO 72-1389 / REV A
	PROJECTION:	SCALE	CODE IDENT / SHEET 1 OF 1

BRUNING 40 21 45424

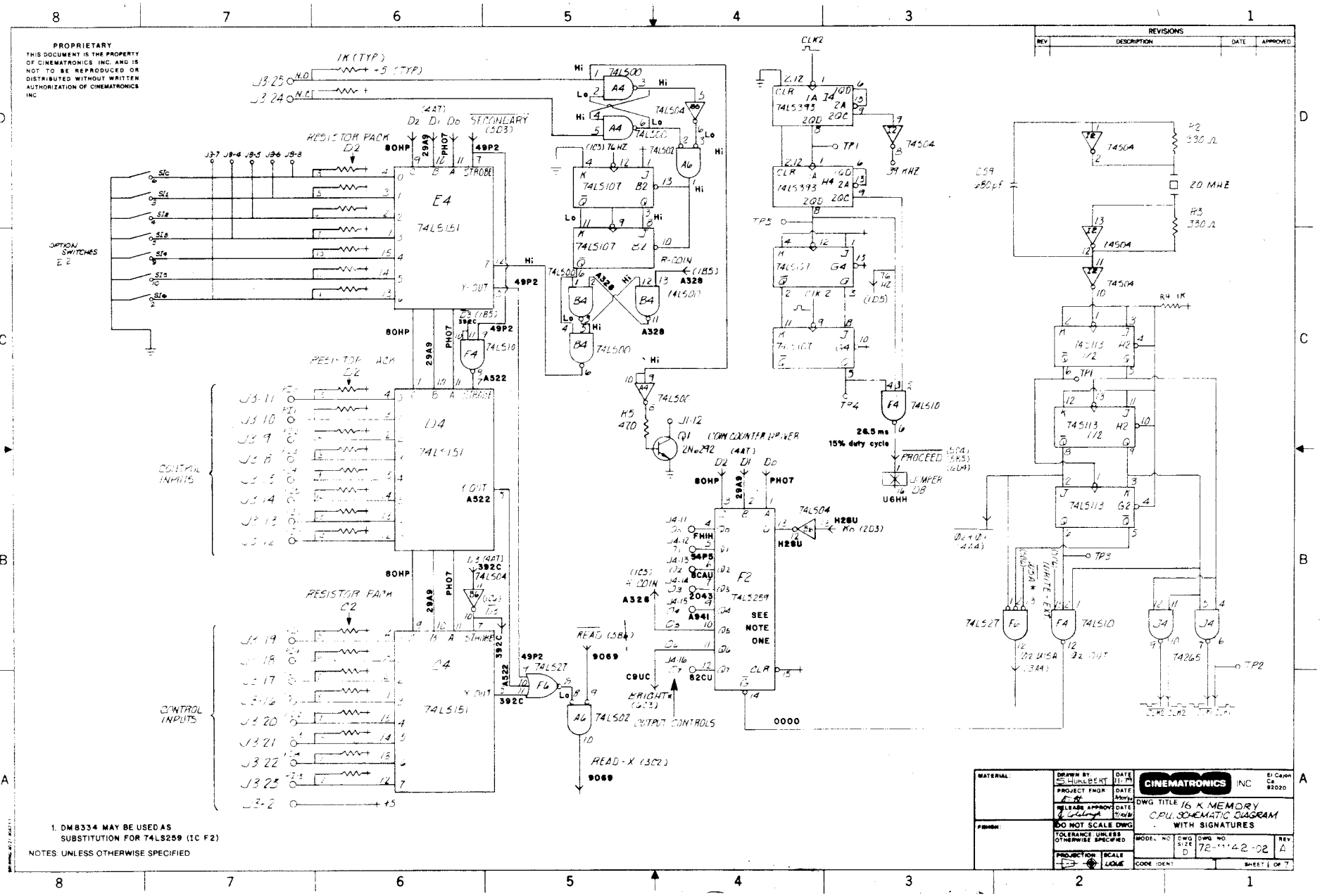
PROPRIETARY
THIS DOCUMENT IS THE PROPERTY OF CINEMATRONICS INC. AND IS NOT TO BE REPRODUCED OR DISTRIBUTED WITHOUT WRITTEN AUTHORIZATION OF CINEMATRONICS INC
REVISIONS
REV DESCRIPTION DATE APPROVED
1K (TYP)
+5 (TYP)
J3-25
J3-24
RESISTOR PACK D2
RESISTOR PACK C2
OPTION SWITCHES E2
E4 74LS151
D4 74LS151
C4 74LS151
F4 74LS10
F6 74LS27
A6 74LS02
A4 74LS00
B4 74LS00
74LS107
74LS393
74LS04
74LS08
74LS32
74LS259
SEE NOTE ONE
74LS51
74LS113
74LS86
74LS266
74LS08
74LS00
74LS10
74LS27
74LS04
74LS02
74LS259
74LS393
74LS107
74LS51
74LS113
74LS86
74LS266
CLK2
20 MHZ
39 MHZ
76 HZ
26.5 ms
15% duty cycle
PROCEED
JUMPER U6HH
2N6292
K5 470
R4 1K
R2 330 Ω
R3 330 Ω
C59 .001 pf
COIN COUNTER DRIVER
COIN COUNTER
BRIGHT
OUTPUT CONTROLS
READ (5B4)
READ-X (3C2)
READ-Y (3C2)
CONTROL INPUTS
STROBE
STRIKE
SECONDARY (5D3)
D2 D1 D0
80HP
29A9
PH07
49P2
392C
A522
A328
A941
9069
0000
TP1
TP2
TP3
TP4
TP5
1. DM8334 MAY BE USED AS SUBSTITUTION FOR 74LS259 (IC F2)
NOTES: UNLESS OTHERWISE SPECIFIED
MATERIAL
FINISH
DRAWN BY S. HUKLBERT
PROJECT ENGR
RELEASE APPROV
DO NOT SCALE DWG
TOLERANCE UNLESS OTHERWISE SPECIFIED
PROJECTION
SCALE
CINEMATRONICS INC
El Cajon Ca 92020
DWG TITLE 16 K MEMORY C.P.U. SCHEMATIC DIAGRAM WITH SIGNATURES
MODEL NO
DWG SIZE D
DWG NO 72-11142-02
REV A
CODE IDENT
SHEET 1 OF 7
A7-1

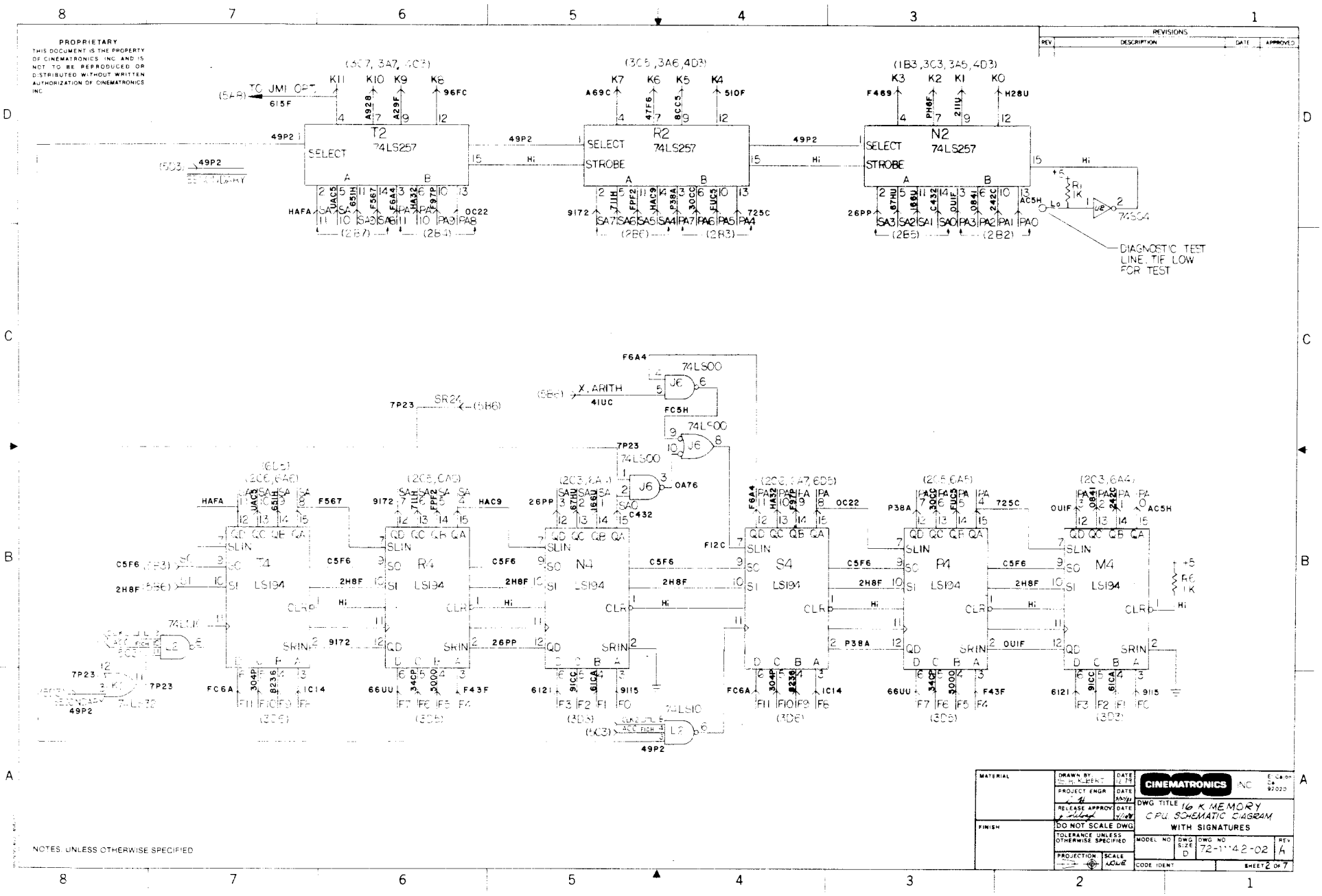
PROPRIETARY
THIS DOCUMENT IS THE PROPERTY OF CINEMATRONICS INC AND IS NOT TO BE REPRODUCED OR DISTRIBUTED WITHOUT WRITTEN AUTHORIZATION OF CINEMATRONICS INC
REVISIONS
REV
DESCRIPTION
DATE
APPROVED
T2
74LS257
SELECT
R2
74LS257
STROBE
N2
74LS257
TO JMI OPT.
615F
49P2
DIAGNOSTIC TEST LINE. TIE LOW FOR TEST
74LS00
X, ARITH
41UC
74LS10
T4
R4
N4
S4
P4
M4
LS194
CLR
SRIN
SLIN
NOTES UNLESS OTHERWISE SPECIFIED
MATERIAL
FINISH
DRAWN BY
PROJECT ENGR
RELEASE APPROV
DO NOT SCALE DWG
TOLERANCE UNLESS OTHERWISE SPECIFIED
PROJECTION
SCALE NONE
CINEMATRONICS INC
DWG TITLE 16 K MEMORY CPU SCHEMATIC DIAGRAM WITH SIGNATURES
MODEL NO
DWG SIZE D
DWG NO 72-1142-02
REV A
CODE IDENT
SHEET 2 OF 7

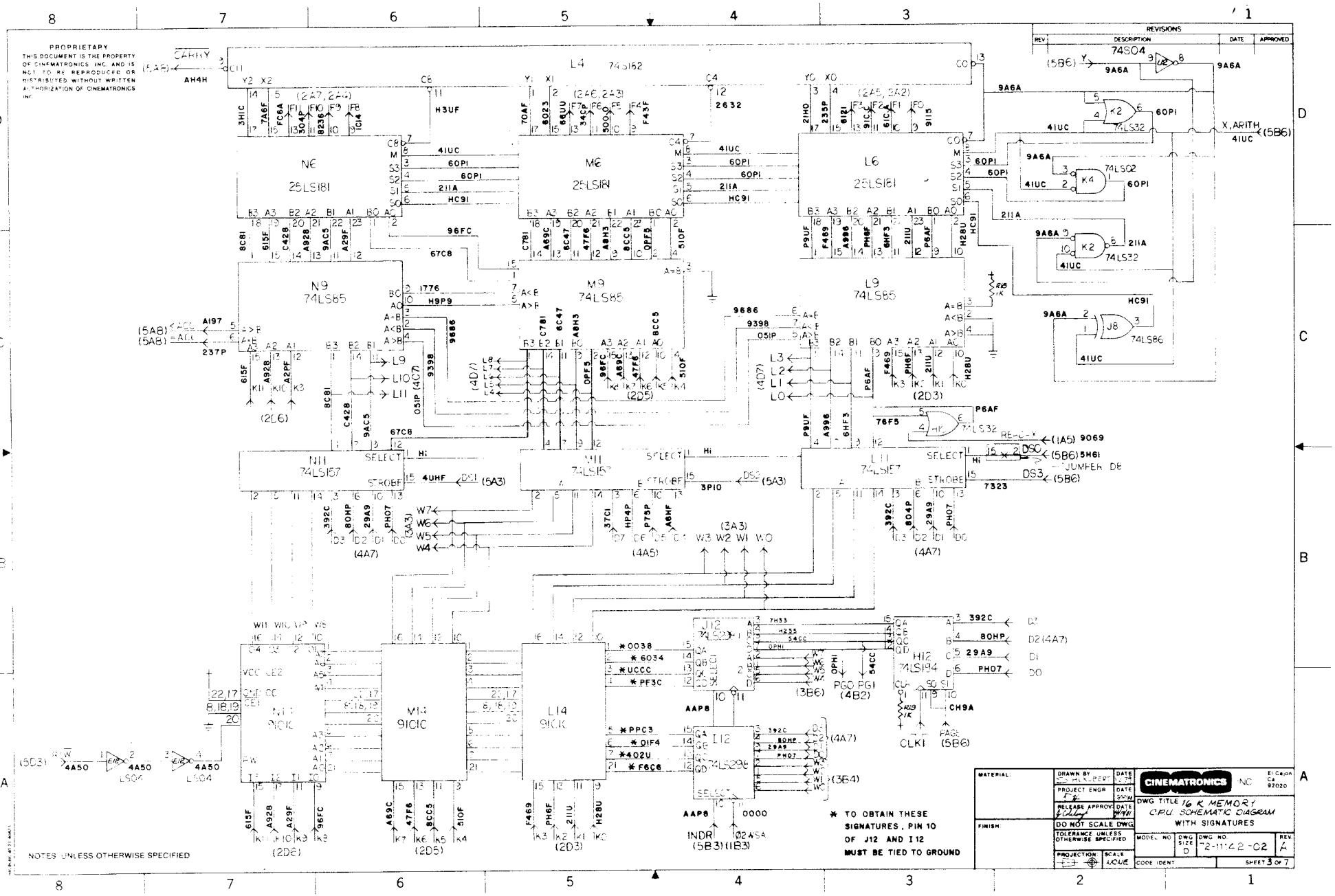
PROPRIETARY
THIS DOCUMENT IS THE PROPERTY OF CINEMATRONICS INC. AND IS NOT TO BE REPRODUCED OR DISTRIBUTED WITHOUT WRITTEN AUTHORIZATION OF CINEMATRONICS INC.
REVISIONS
REV
DESCRIPTION
DATE
APPROVED
74S04
L4 74S162
N6 25LS181
M6 25LS181
L6 25LS181
N9 74LS85
M9 74LS85
L9 74LS85
N11 74LS157
M11 74LS157
L11 74LS157
K2 74LS32
K4 74LS02
J8 74LS86
J12 74LS298
I12 74LS298
H12 74LS194
M14 91C1C
L14 91C1C
CARRY
X, ARITH
CLK1
PAGE
INDR
Ø2 WSA
* TO OBTAIN THESE SIGNATURES, PIN 10 OF J12 AND I12 MUST BE TIED TO GROUND
NOTES UNLESS OTHERWISE SPECIFIED
MATERIAL:
FINISH:
DRAWN BY
PROJECT ENGR
RELEASE APPROV
DO NOT SCALE DWG
TOLERANCE UNLESS OTHERWISE SPECIFIED
PROJECTION
SCALE NONE
CINEMATRONICS INC
El Cajon Ca 92020
DWG TITLE 16 K MEMORY C.P.U. SCHEMATIC DIAGRAM WITH SIGNATURES
MODEL NO
DWG SIZE D
DWG NO. 72-11142-02
REV A
CODE IDENT
SHEET 3 OF 7

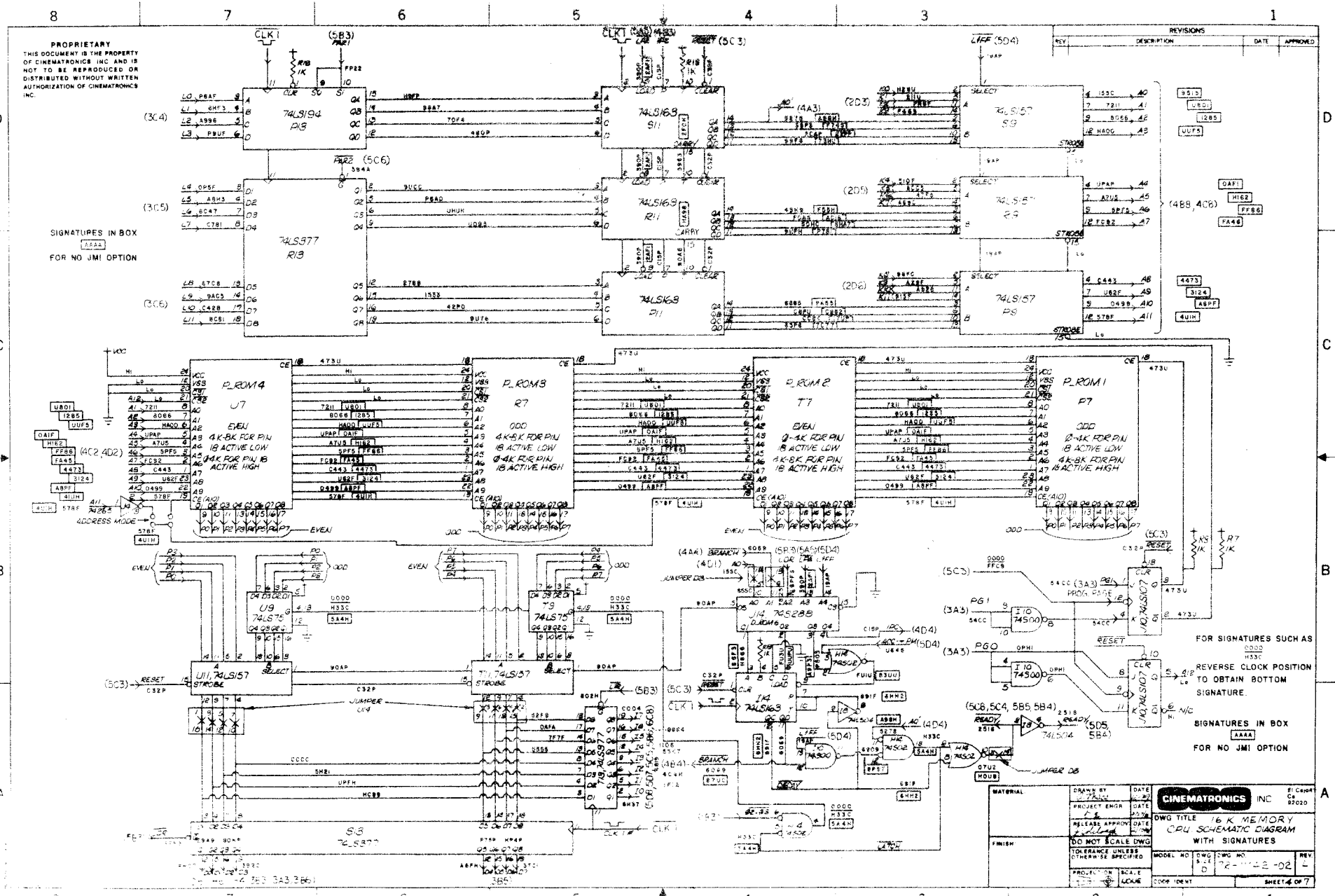
PROPRIETARY
THIS DOCUMENT IS THE PROPERTY OF CINEMATRONICS INC AND IS NOT TO BE REPRODUCED OR DISTRIBUTED WITHOUT WRITTEN AUTHORIZATION OF CINEMATRONICS INC.
SIGNATURES IN BOX
AAAA
FOR NO JMI OPTION
REVISIONS
REV
DESCRIPTION
DATE
APPROVED
74LS194
P13
74LS377
R13
74LS163
S11
74LS163
R11
74LS163
P11
74LS157
S9
74LS157
R9
74LS157
P9
P_ROM4
U7
EVEN
4K-8K FOR PIN 18 ACTIVE LOW
Ø-4K FOR PIN 18 ACTIVE HIGH
P_ROM3
R7
ODD
4K-8K FOR PIN 18 ACTIVE LOW
Ø-4K FOR PIN 18 ACTIVE HIGH
P_ROM2
T7
EVEN
Ø-4K FOR PIN 18 ACTIVE LOW
4K-8K FOR PIN 18 ACTIVE HIGH
P_ROM1
P7
ODD
Ø-4K FOR PIN 18 ACTIVE LOW
4K-8K FOR PIN 18 ACTIVE HIGH
ADDRESS MODE
U9
74LS75
T9
74LS75
U11, 74LS157
T11, 74LS157
S13
74LS377
J14
74S288
I14
74LS163
I10
74S00
J10, 74LS107
FOR SIGNATURES SUCH AS
REVERSE CLOCK POSITION TO OBTAIN BOTTOM SIGNATURE.
SIGNATURES IN BOX
AAAA
FOR NO JMI OPTION
MATERIAL
FINISH
DRAWN BY
PROJECT ENGR
RELEASE APPROV
DO NOT SCALE DWG
TOLERANCE UNLESS OTHERWISE SPECIFIED
PROJECTION
SCALE
CINEMATRONICS INC
El Cajon Ca 92020
DWG TITLE 16 K MEMORY CPU SCHEMATIC DIAGRAM WITH SIGNATURES
MODEL NO
DWG SIZE D
DWG NO
REV. L
CODE IDENT
SHEET 4 OF 7

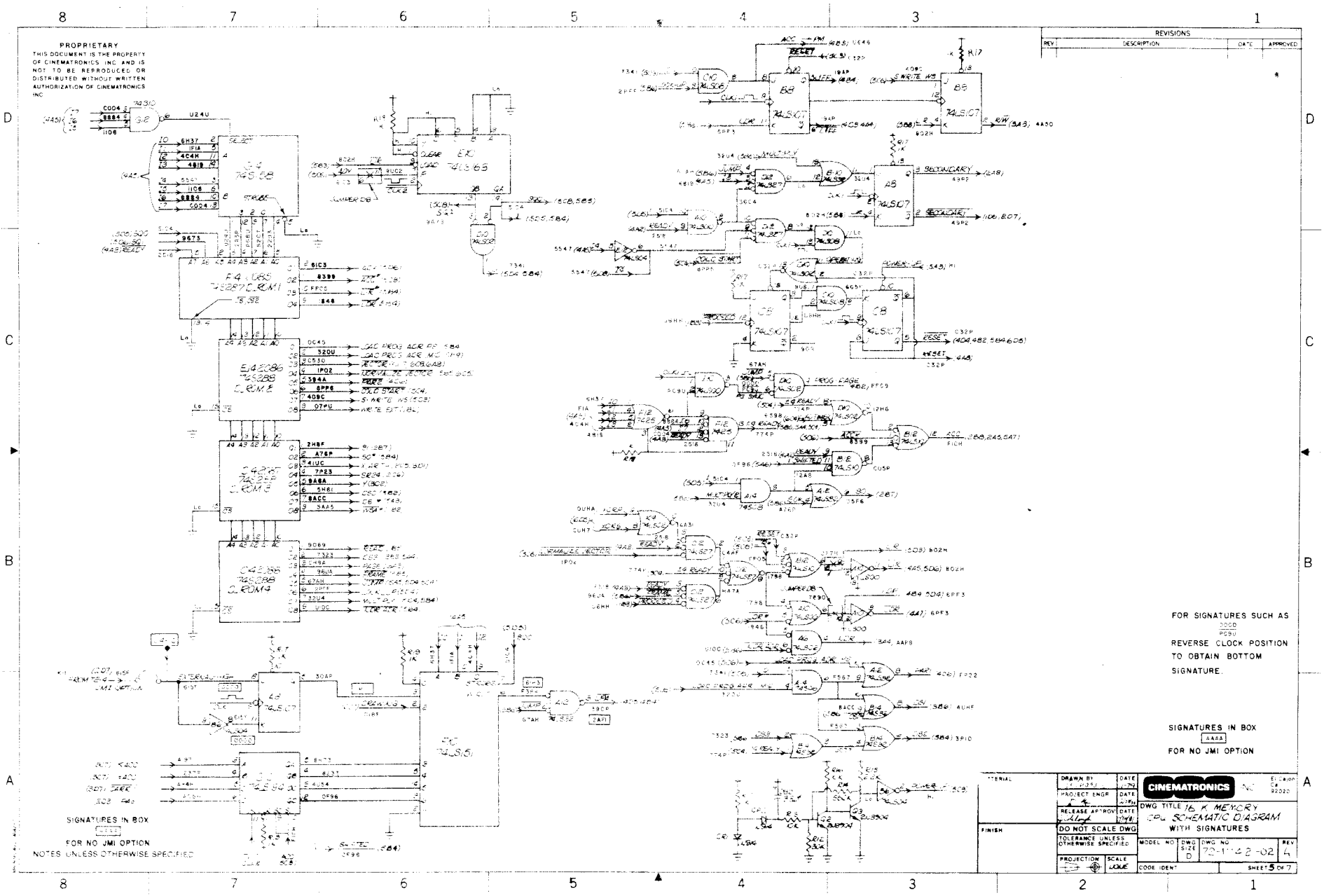
PROPRIETARY
THIS DOCUMENT IS THE PROPERTY OF CINEMATRONICS INC AND IS NOT TO BE REPRODUCED OR DISTRIBUTED WITHOUT WRITTEN AUTHORIZATION OF CINEMATRONICS INC
REVISIONS
REV
DESCRIPTION
DATE
APPROVED
FOR SIGNATURES SUCH AS
REVERSE CLOCK POSITION TO OBTAIN BOTTOM SIGNATURE.
SIGNATURES IN BOX
FOR NO JMI OPTION
SIGNATURES IN BOX
FOR NO JMI OPTION
NOTES UNLESS OTHERWISE SPECIFIED
CINEMATRONICS INC
DWG TITLE 16 K MEMORY CPU SCHEMATIC DIAGRAM WITH SIGNATURES
DO NOT SCALE DWG
TOLERANCE UNLESS OTHERWISE SPECIFIED
MODEL NO
DWG SIZE D
DWG NO 72-1142-02
REV A
CODE IDENT
SHEET 5 OF 7

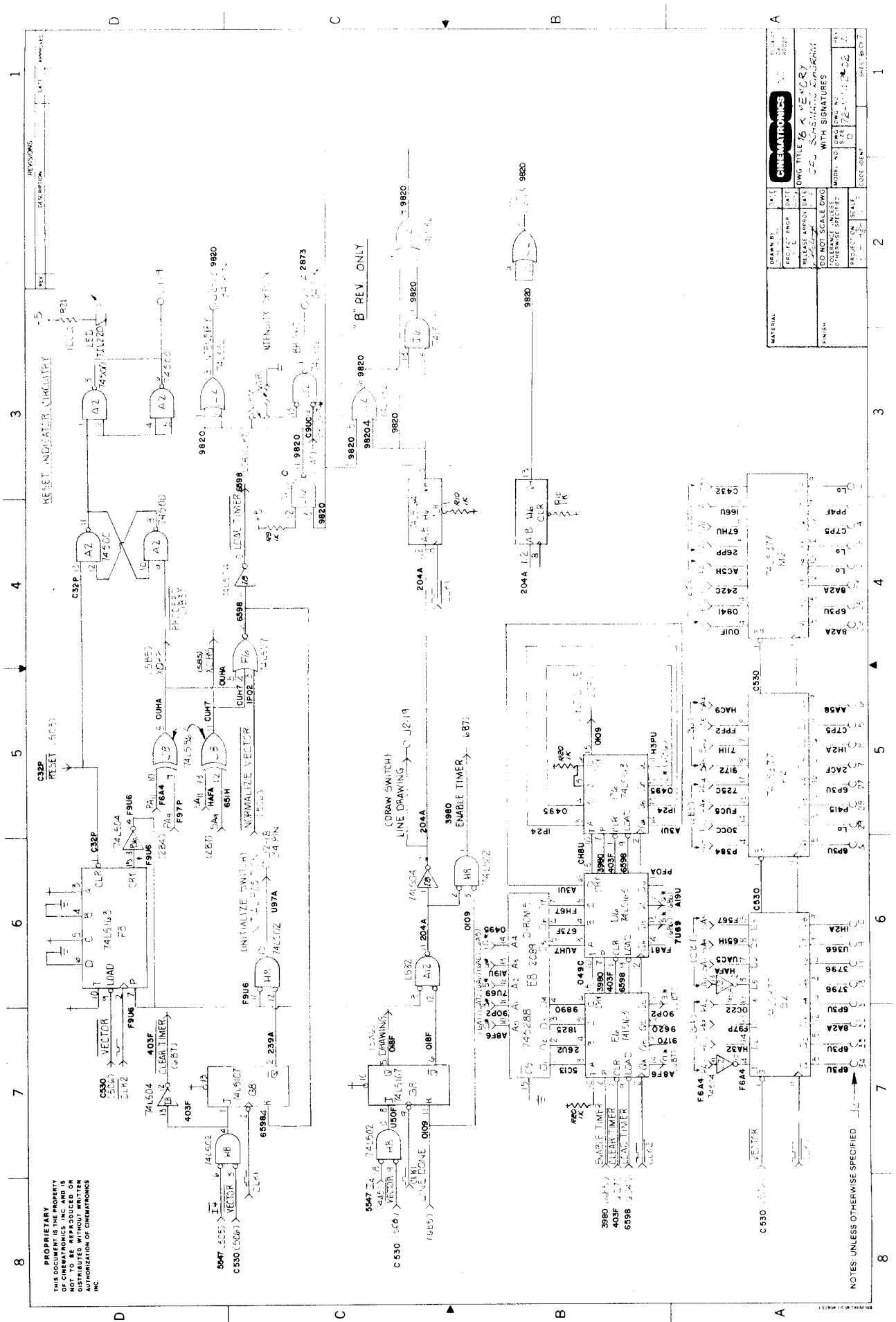
CINEMATRONICS
DWG TITLE 16 K MEMORY
WITH SIGNATURES
DO NOT SCALE DWG
PROPRIETARY
THIS DOCUMENT IS THE PROPERTY OF CINEMATRONICS INC. AND IS NOT TO BE REPRODUCED OR DISTRIBUTED WITHOUT WRITTEN AUTHORIZATION OF CINEMATRONICS INC.
NOTES: UNLESS OTHERWISE SPECIFIED
"B" REV. ONLY
RESET INDICATOR CIRCUITRY
LOAD TIMER
NORMALIZE VECTOR
UNITIALIZE SWITCH
CLEAR TIMER
VECTOR
LINE DRAWING
ENABLE TIMER
(DRAW SWITCH)
LINE DONE
DRAWING
REVISIONS

PROPRIETARY
THIS DOCUMENT IS THE PROPERTY OF CINEMATRONICS INC. AND IS NOT TO BE REPRODUCED OR DISTRIBUTED WITHOUT WRITTEN AUTHORIZATION OF CINEMATRONICS INC.

REVISIONS			
REV	DESCRIPTION	DATE	APPROVED

CONNECTOR J1

PIN NO.	FUNCTION	FROM / TO IC - PIN NO.	SCHMTC LOCATION SHT-AREA
1	NC		
2	NC		
3	COIN COUNTER	FROM COLLECTOR OF Q1	1-C4
4	(FEMALE) GND		
5	GND		
6	GND		
7	NC		
8	NC		
9	LED CATHODE	FROM A2-3.6	6-D3
10	+5		
11	+5		
12	NC		

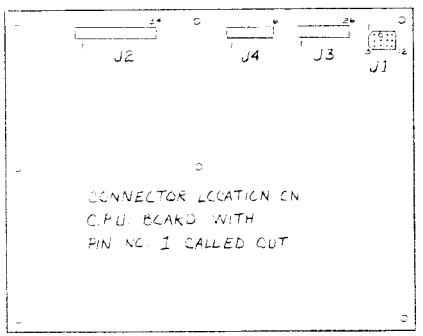

CONNECTOR J2

PIN NO.	FUNCTION	FROM / TO IC - PIN NO.	SCHMTC LOCATION SHT-AREA
1	YDAC BIT 1	FROM M2-9	6-A4
2	YDAC BIT Ø	FROM M2-19	
3	YDAC BIT 3	FROM M2-2	
4	YDAC BIT 2	FROM M2-6	
5	YDAC BIT 5	FROM P2-9	6-A5
6	YDAC BIT 4	FROM P2-19	
7	YDAC BIT 7	FROM P2-2	
8	YDAC BIT 6	FROM P2-6	
9	YDAC BIT 9	FROM S2-9	6-A6
10	YDAC BIT 8	FROM S2-19	
11	YDAC BIT 10	FROM S2-6	
12	INTENSITY	FROM J2-3	6-D3
13	YDAC BIT 11	FROM S2-2	6-A6
14	BRIGHT	FROM J2-11	6-C3
15	GND		
16	XDAC OUTPUT	FROM DISPLAY PCB TO CONN. J4-4	
17	GND		
18	INITIALIZE SWITCH	FROM H8-13	6-C6
19	DRAW SWITCH	FROM I8-2	6-C5
20	GND		
21	XDAC BIT Ø	FROM M2-16	6-A4
22	GND		
23	XDAC BIT 1	FROM M2-12	
24	GND		
25	XDAC BIT 2	FROM M2-15	
26	XDAC BIT 3	FROM M2-5	
27	XDAC BIT 4	FROM P2-16	6-A5
28	XDAC BIT 5	FROM P2-12	
29	XDAC BIT 6	FROM P2-15	
30	XDAC BIT 7	FROM P2-5	
31	XDAC BIT 8	FROM S2-16	6-A6
32	XDAC BIT 9	FROM S2-12	
33	XDAC BIT 10	FROM S2-15	
34	XDAC BIT 11	FROM S2-5	

CONNECTOR J3

PIN NO.	FUNCTION	FROM / TO IC - PIN NO	SCHMTC LOCATION SHT-AREA
1	NC		
2	+5		
3	SECONDARY INPUT Ø	TO E4-4	1-C6
4	SECONDARY INPUT 3	TO E4-1	
5	SECONDARY INPUT 2	TO E4-2	
6	SECONDARY INPUT 1	TO E4-3	
7	SECONDARY INPUT 6	TO E4-13	
8	PRIMARY INPUT 3	TO D4-1	1-B6
9	PRIMARY INPUT 2	TO D4-2	
10	PRIMARY INPUT 1	TO D4-3	
11	PRIMARY INPUT Ø	TO D4-4	
12	PRIMARY INPUT 7	TO D4-12	
13	PRIMARY INPUT 6	TO D4-13	
14	PRIMARY INPUT 5	TO D4-14	
15	PRIMARY INPUT 4	TO D4-15	
16	PRIMARY INPUT 11	TO C4-1	1-A6
17	PRIMARY INPUT 10	TO C4-2	
18	PRIMARY INPUT 9	TO C4-3	
19	PRIMARY INPUT 8	TO C4-4	
20	PRIMARY INPUT 12	TO C4-15 CONN. J4-3	
21	PRIMARY INPUT 13	TO C4-14 CONN. J4-1	
22	PRIMARY INPUT 14	TO C4-13 CONN J4-5	
23	PRIMARY INPUT 15	TO C4-12 CONN. J4-2	
24	COIN SWITCH (NORMALY CLOSED)	TO A4-5	1-D5
25	COIN SWITCH (NORMALY OPEN)	TO A4-1	
26	GND		

CONNECTOR J4

PIN NO.	FUNCTION	FROM / TO IC - PIN NO.	SCHMTC LOCATION SHT-AREA
1	PRIMARY INPUT 13	TO C4-14 CONN. J3-21	1-A6
2	PRIMARY INPUT 15	TO C4-12 CONN. J3-23	
3	PRIMARY INPUT 12	TO C4-15 CONN. J3-20	
4	XDAC OUTPUT	FROM DISPLAY PCB TO CONN. J2-16	
5	PRIMARY INPUT 14	TO C4-13 CONN. J3-22	1-A6
6	NC		
7	NC		
8	GND		
9	NC		
10	EXTERNAL HIGH OUTPUT	TO A8-8 B6-9	5-A7
11	OUTPUT Ø	FROM F2-4	1-B4
12	OUTPUT 1	FROM F2-5	
13	OUTPUT 2	FROM F2-6	
14	OUTPUT 3	FROM F2-7	
15	OUTPUT 4	FROM F2-9	
16	OUTPUT 7	FROM F2-12	

NOTES: UNLESS OTHERWISE SPECIFIED

A7-7

MATERIAL	DRAWN BY: Jay Escott	DATE: 3 JUNE 980	CINEMATRONICS INC. El Cajon, Ca. 92020
	PROJECT ENGR: [illegible]	DATE: 7-27	DWG TITLE: 16 K MEMORY C.P.U. SCHEMATIC
FINISH	RELEASE APPROV: [illegible]	DATE: 10-89	
	DO NOT SCALE DWG		
	TOLERANCE UNLESS OTHERWISE SPECIFIED		MODEL NO. / DWG SIZE: D / DWG NO: 72-11142-02 / REV: A
	PROJECTION: [illegible]	SCALE:	CODE IDENT / SHEET 7 OF 7

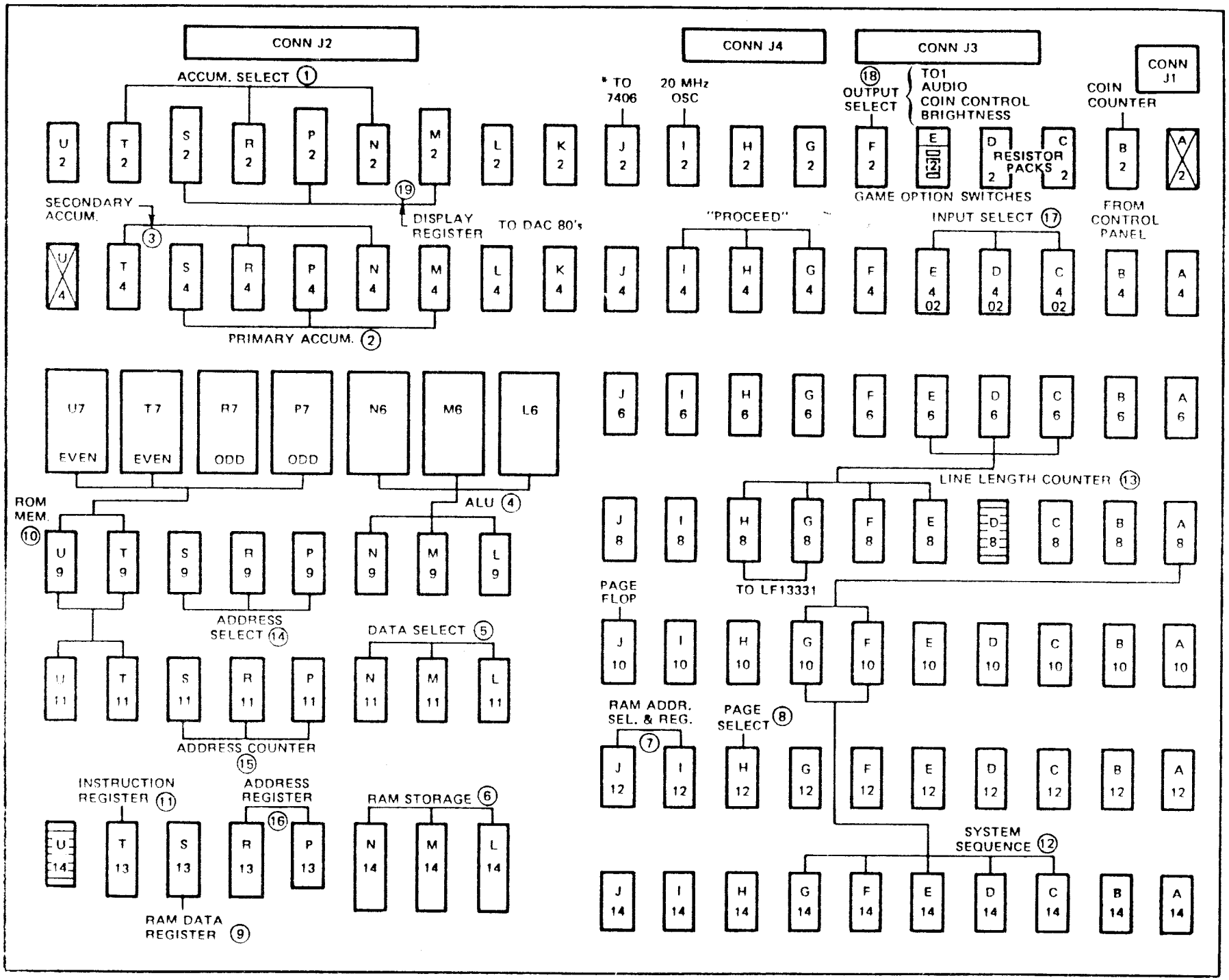
CONN J2
CONN J4
CONN J3
CONN J1
ACCUM. SELECT (1)
* TO 7406
20 MHz OSC
(18) OUTPUT SELECT
TO1
AUDIO
COIN CONTROL
BRIGHTNESS
COIN COUNTER
RESISTOR PACKS
GAME OPTION SWITCHES
SECONDARY ACCUM.
(3)
(19)
DISPLAY REGISTER
TO DAC 80's
"PROCEED"
INPUT SELECT (17)
FROM CONTROL PANEL
PRIMARY ACCUM. (2)
U7 EVEN
T7 EVEN
R7 ODD
P7 ODD
N6
M6
L6
LINE LENGTH COUNTER (13)
ROM MEM. (10)
ALU (4)
TO LF13331
PAGE FLOP
ADDRESS SELECT (14)
DATA SELECT (5)
RAM ADDR. SEL. & REG. (7)
PAGE SELECT (8)
ADDRESS COUNTER (15)
INSTRUCTION REGISTER (11)
ADDRESS REGISTER (16)
RAM STORAGE (6)
SYSTEM SEQUENCE (12)
RAM DATA REGISTER (9)

PROPRIETARY
THIS DOCUMENT IS THE PROPERTY OF CINEMATRONICS INC. AND IS NOT TO BE REPRODUCED OR DISTRIBUTED WITHOUT WRITTEN AUTHORIZATION OF CINEMATRONICS INC.

REVISIONS			
REV	DESCRIPTION	DATE	APPROVED

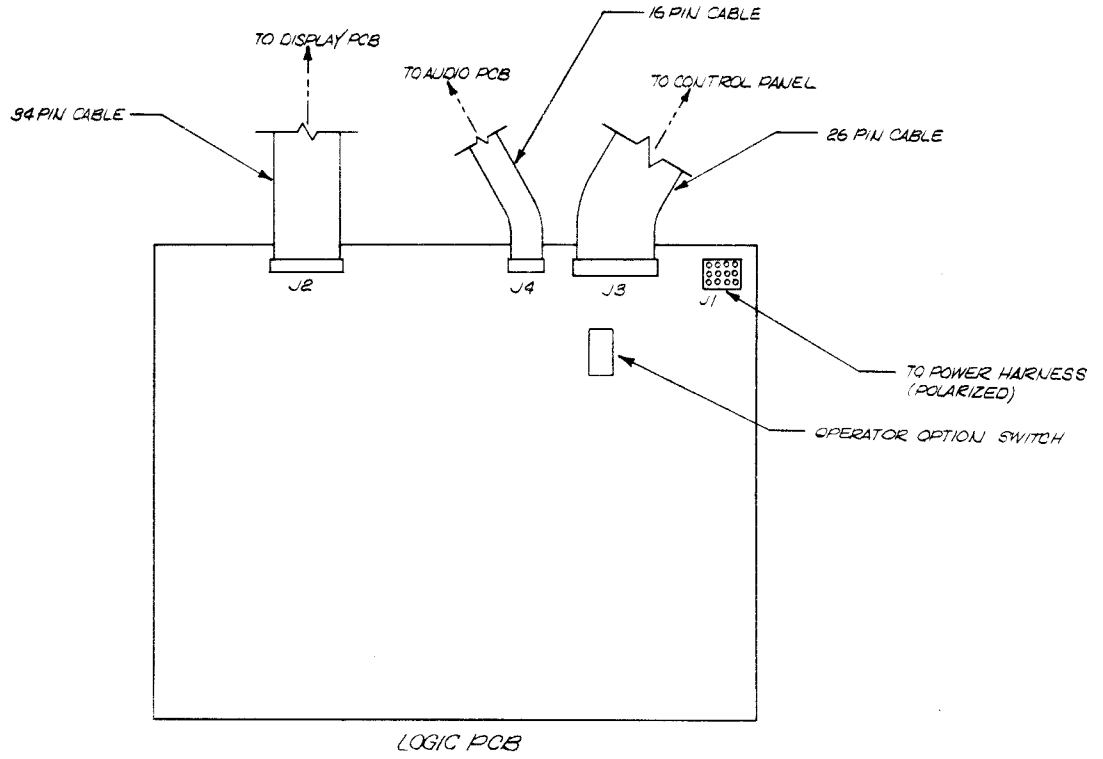

NOTES: UNLESS OTHERWISE SPECIFIED

MATERIAL:	DRAWN BY:	DATE	CINEMATRONICS INC. El Cajon Ca. 92020
	PROJECT ENGR:	DATE	
FINISH: BREAK ALL SHARP EDGES AND DEBURR ALL HOLES.	RELEASE APPROV	DATE	DWG TITLE C.P.U. BOARD ILLUSTRATION
	DO NOT SCALE DWG		
	TOLERANCE UNLESS OTHERWISE SPECIFIED		MODEL NO. / DWG SIZE C / DWG NO. 72-10626-01 / REV
	PROJECTION:	SCALE:	CODE IDENT. / SHEET / OF /

BRUNING 40-21 4/74/3

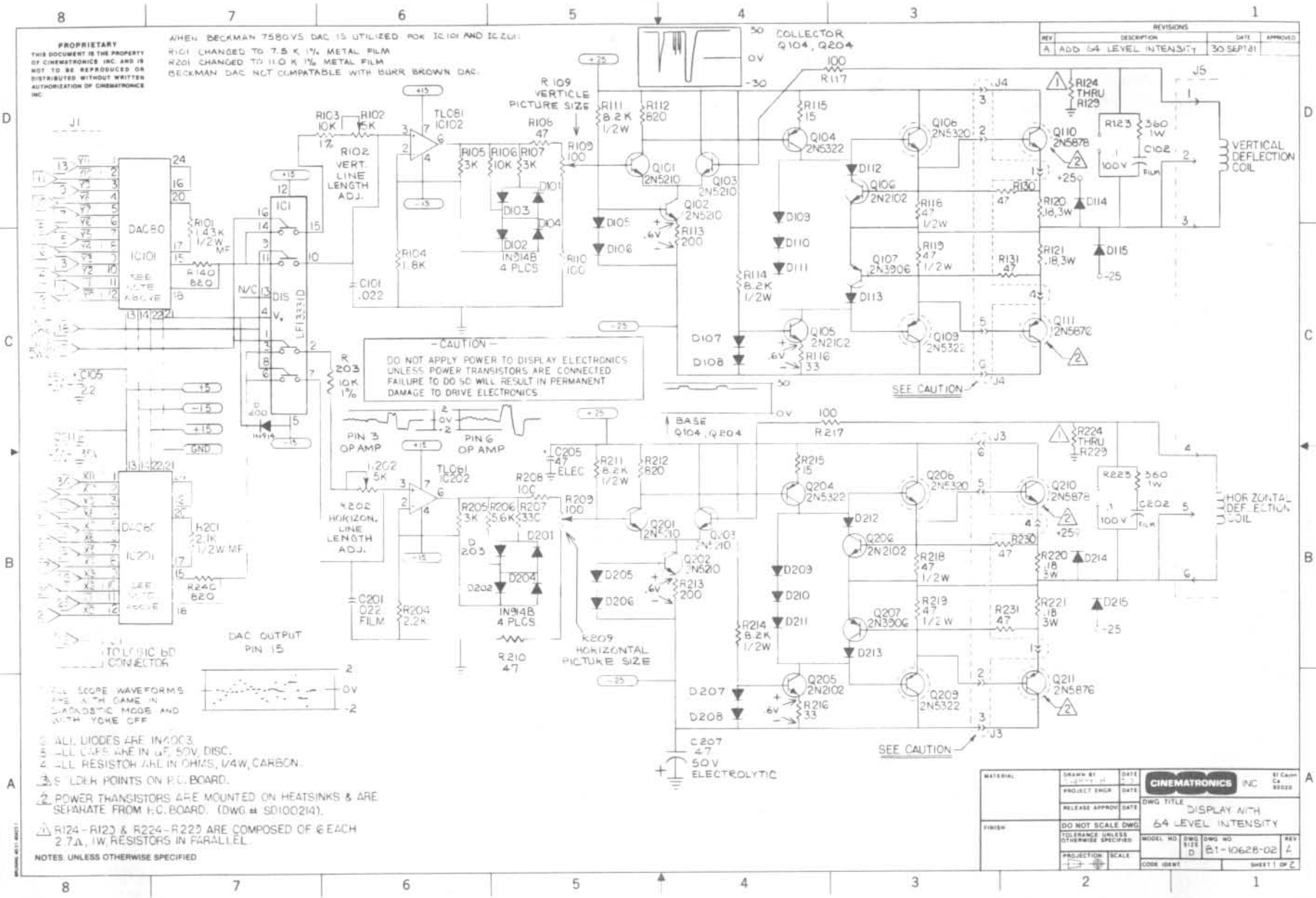
PROPRIETARY
THIS DOCUMENT IS THE PROPERTY OF CINEMATRONICS INC. AND IS NOT TO BE REPRODUCED OR DISTRIBUTED WITHOUT WRITTEN AUTHORIZATION OF CINEMATRONICS INC.
WHEN BECKMAN 7580 VS DAC IS UTILIZED FOR IC101 AND IC201:
R101 CHANGED TO 7.5 K 1% METAL FILM
R201 CHANGED TO 11.0 K 1% METAL FILM
BECKMAN DAC NOT COMPATABLE WITH BURR BROWN DAC.
REVISIONS
REV A DESCRIPTION: ADD 64 LEVEL INTENSITY DATE: 30 SEPT 81
DAC80 IC101
LF13331D
TL081 IC102
TL081 IC202
R109 VERTICLE PICTURE SIZE
R202 HORIZON. LINE LENGTH ADJ.
R102 VERT. LINE LENGTH ADJ.
R209 HORIZONTAL PICTURE SIZE
COLLECTOR Q104, Q204
BASE Q104, Q204
VERTICAL DEFLECTION COIL
HORIZONTAL DEFLECTION COIL
SEE CAUTION
- CAUTION -
DO NOT APPLY POWER TO DISPLAY ELECTRONICS UNLESS POWER TRANSISTORS ARE CONNECTED. FAILURE TO DO SO WILL RESULT IN PERMANENT DAMAGE TO DRIVE ELECTRONICS.
PIN 3 OP AMP
PIN 6 OP AMP
DAC OUTPUT PIN 15
TO LOGIC BD CONNECTOR
SCOPE WAVEFORMS ARE WITH GAME IN DIAGNOSTIC MODE AND WITH YOKE OFF
ALL DIODES ARE IN4003.
ALL CAPS ARE IN uF, 50V, DISC.
ALL RESISTOR ARE IN OHMS, 1/4W, CARBON.
SEE LOCH POINTS ON P.C. BOARD.
POWER TRANSISTORS ARE MOUNTED ON HEATSINKS & ARE SEPARATE FROM P.C. BOARD. (DWG # SD100214).
R124 - R129 & R224 - R229 ARE COMPOSED OF 6 EACH 2.7Ω, 1W RESISTORS IN PARALLEL.
NOTES: UNLESS OTHERWISE SPECIFIED
CINEMATRONICS INC
DWG TITLE: DISPLAY WITH 64 LEVEL INTENSITY
DWG NO: 81-10628-02
REV: A
SHEET 1 OF 2

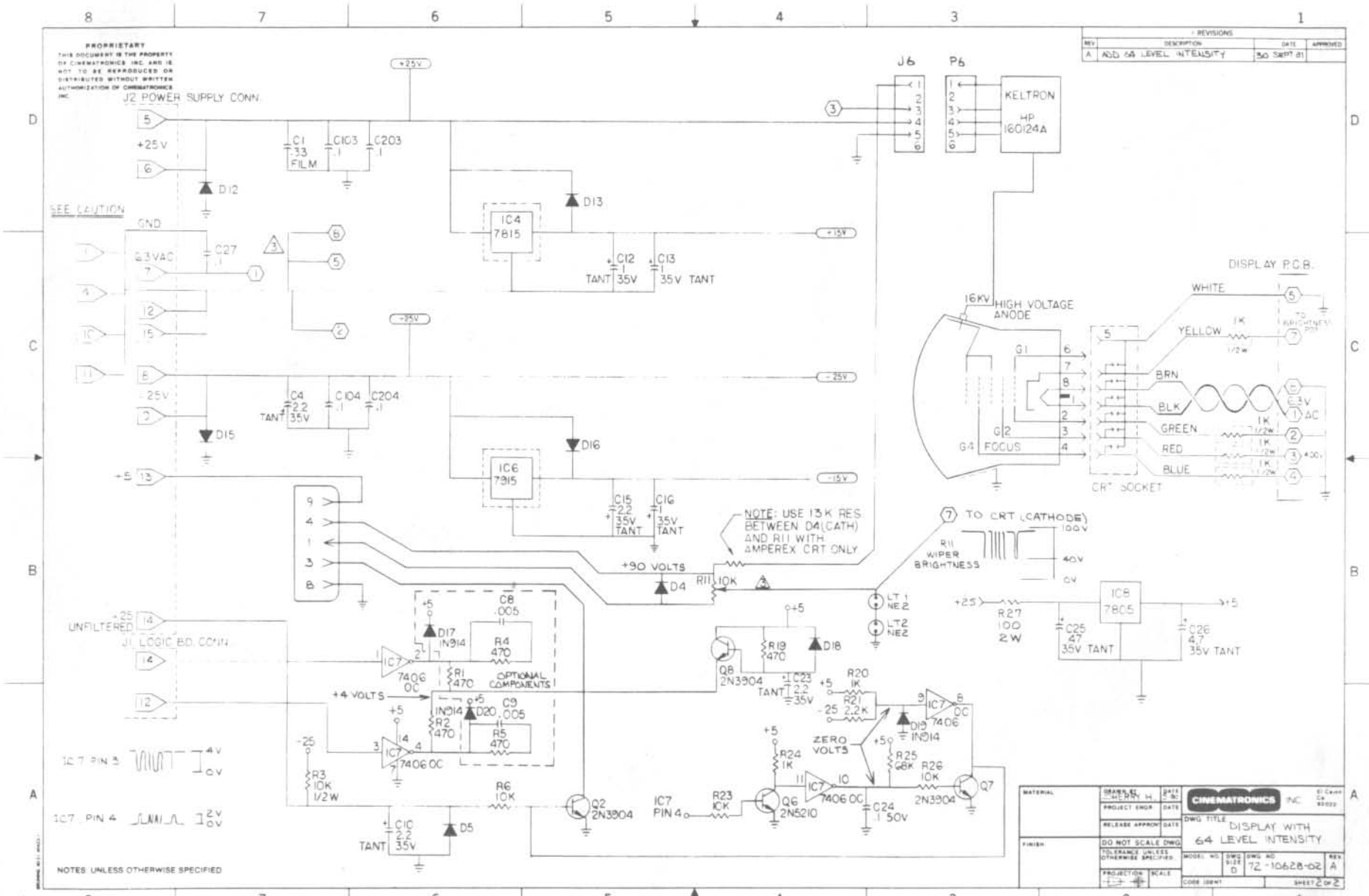
PROPRIETARY
THIS DOCUMENT IS THE PROPERTY OF CINEMATRONICS INC. AND IS NOT TO BE REPRODUCED OR DISTRIBUTED WITHOUT WRITTEN AUTHORIZATION OF CINEMATRONICS INC.
REVISIONS
REV A DESCRIPTION: ADD 64 LEVEL INTENSITY DATE: 30 SEPT 81
J2 POWER SUPPLY CONN
+25V
-25V
+15V
-15V
+5
GND
6.3VAC
C1 .33 FILM
C103 .1
C203 .1
C27 .1
C4 2.2 35V TANT
C104 .1
C204 .1
C12 1 TANT 35V
C13 1 35V TANT
C15 2.2 35V TANT
C16 1 35V TANT
C8 .005
C9 .005
C10 2 35V TANT
C23 2.2 35V TANT
C24 .1 50V
C25 47 35V TANT
C26 4.7 35V TANT
D12
D13
D15
D16
D17 IN914
D18
D19 IN914
D20 IN914
D4
D5
IC4 7815
IC6 7915
IC7 7406 OC
IC8 7805
R1 470
R2 470
R3 10K 1/2W
R4 470
R5 470
R6 10K
R11 10K
R11 WIPER BRIGHTNESS
R19 470
R20 1K
R21 2.2K
R23 10K
R24 1K
R25 68K
R26 10K
R27 100 2W
Q2 2N3804
Q6 2N5210
Q7 2N3904
Q8 2N3904
NOTE: USE 13K RES BETWEEN D4(CATH) AND R11 WITH AMPEREX CRT ONLY
+90 VOLTS
+4 VOLTS
ZERO VOLTS
OPTIONAL COMPONENTS
UNFILTERED +25
J1 LOGIC BD. CONN
IC7 PIN 3
IC7 PIN 4
IC7 PIN 4
J6
P6
KELTRON HP 160124A
DISPLAY P.C.B.
16KV HIGH VOLTAGE ANODE
G1
G2 FOCUS
G4
CRT SOCKET
WHITE
YELLOW 1K 1/2W
BRN
BLK
GREEN 1K 1/2W
RED 1K 1/2W
BLUE 1K 1/2W
6.3V AC
TO BRIGHTNESS POT
TO CRT (CATHODE)
100V
40V
0V
LT1 NE2
LT2 NE2
SEE CAUTION
NOTES: UNLESS OTHERWISE SPECIFIED
CINEMATRONICS INC.
DWG TITLE: DISPLAY WITH 64 LEVEL INTENSITY
DWG NO 72-10628-02
REV A
SHEET 2 OF 2

REVISIONS				
SHEET				
REVISION				

REVISIONS				
REV	LTR	DESCRIPTION	DATE	APPROVED
	A	REDRAWN @ 1.5:1 WITH NO CHANGE J. Tarbet		
	A	ADD 64 LEVEL INTENS	7 30 1981	

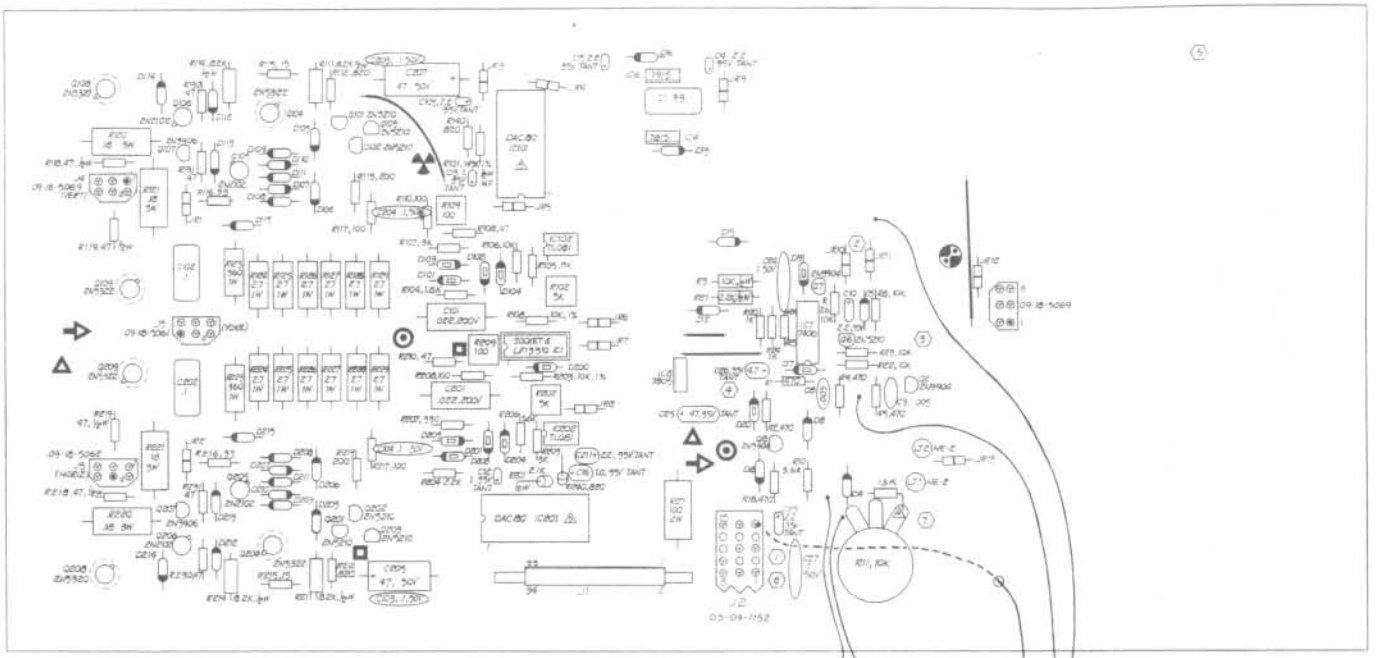

REQUIRED JUMPERS			
SYM	SIZE TYPE	COLOR	QTY
	22AWG	BRN	2
	22AWG	BRN	3 ½
	18AWG	BLK	4 ⅞
	18AWG	RED	5
	18AWG	BLU	9

DET SOCKET CONNECTIONS			
SYM	SIZE TYPE	COLOR	LENGTH
1	18AWG	BLK	10⅛"
2	18AWG	GRN	13"
3	18AWG	RED	12"
4	18AWG	BLU	11⅛"
5	18AWG	WHT	15"
7	18AWG	YEL	10"
8	18AWG	BRN	10⅛"

TWIST BRN & BLK WIRES TOGETHER

MOLEX 03-09-1093

64 LEVEL INTENSITY CONNECTOR				
PIN 1	MALE	VIOLET	11	
PIN 3	FEMALE	WHITE	11	
PIN 4	FEMALE	YELLOW	11	
PIN 8	FEMALE	BLACK	12	
PIN 9	FEMALE	ORANGE	15	

1. ⊥R = JUMPER RES. (ZERO OHM, -□□-)

2. CHANGE BECKMAN 7590 VR DAC 3 UTILIZED FOR IC101 & IC102
   R101 CHANGE TO 7.5K 1% METAL FILM (BECKMAN DAC NOT COMPATABLE
   R201 CHANGE TO 11.0K 1% METAL FILM WITH BURR BROWN DAC)

3. INSTALL 5.6K, ¼W RES. ON CIRCUIT SIDE OF BOARD WHEN MARKED DET IS INSTALLED

4. CODES MARKED -ED- ARE NON-MIL. ALL OTHERS ARE MIL SPEC

5. ALL RES VALUES ARE IN OHMS 1/4 W 5% CARBON

6. ALL CAP VALUES ARE IN μF

NOTES UNLESS OTHERWISE SPECIFIED

MATERIAL	DRAWN BY J.CHAMBERS	DATE 7.8.81	VECTOR ELECTRONICS INC.	SCALE
	PROJECT ENGR	DATE		
	RELEASE APPROVED	DATE	DWG TITLE DISPLAY WITH 64 LEVEL INTENSITY	
FINISH	DO NOT SCALE DWG			
	TOLERANCES UNLESS OTHERWISE SPECIFIED		MODEL NO	DWG NO 51-10628-02
	PROJECTION 1st ANGLE	READY TO RELEASE	CODE IDENT	SHEET 1 OF

CONTROL

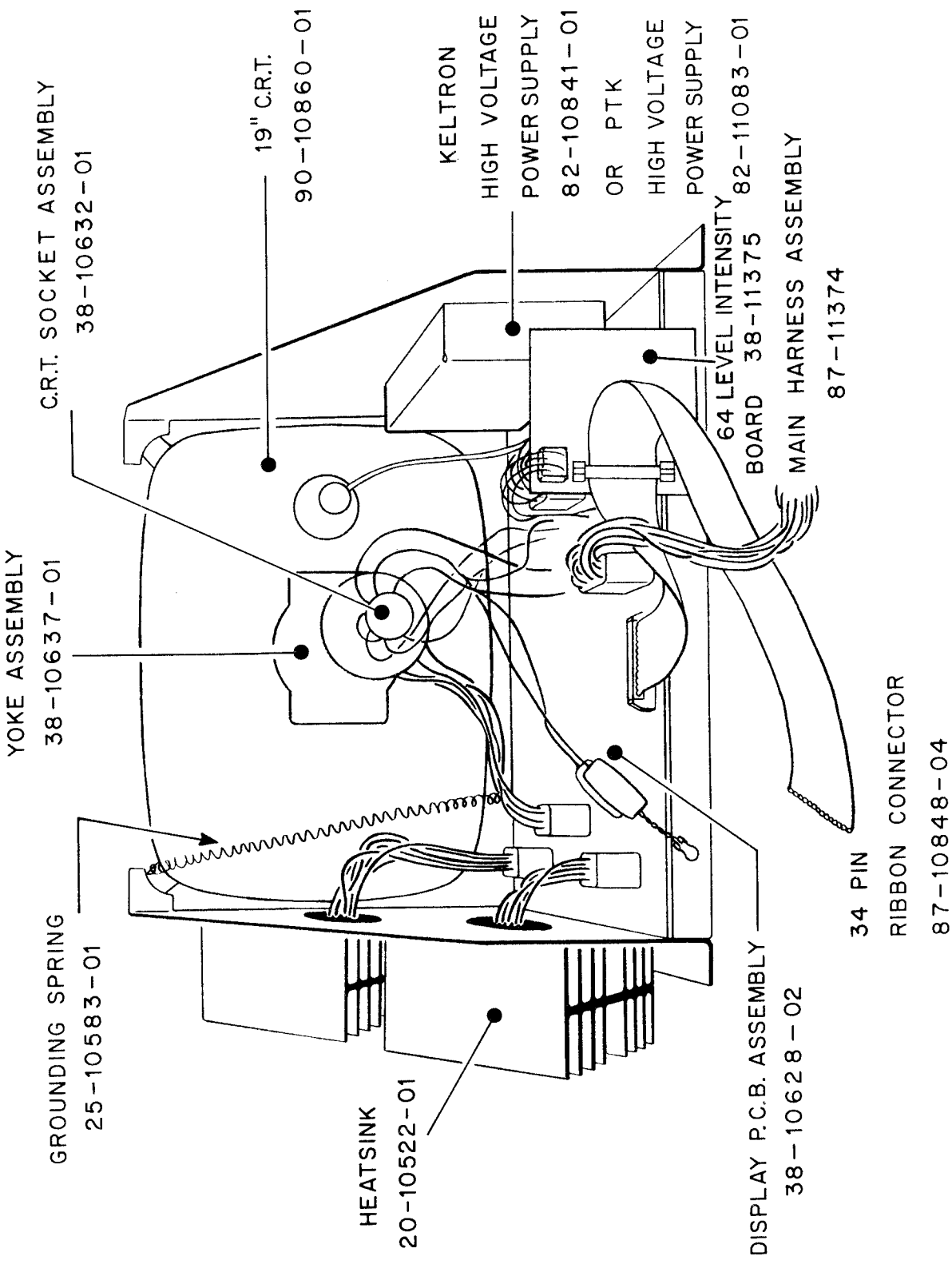

MONITOR ASSEMBLY (KELTRON)

38-10633-02

MONITOR ASSEMBLY (PTK)

38-11207-02

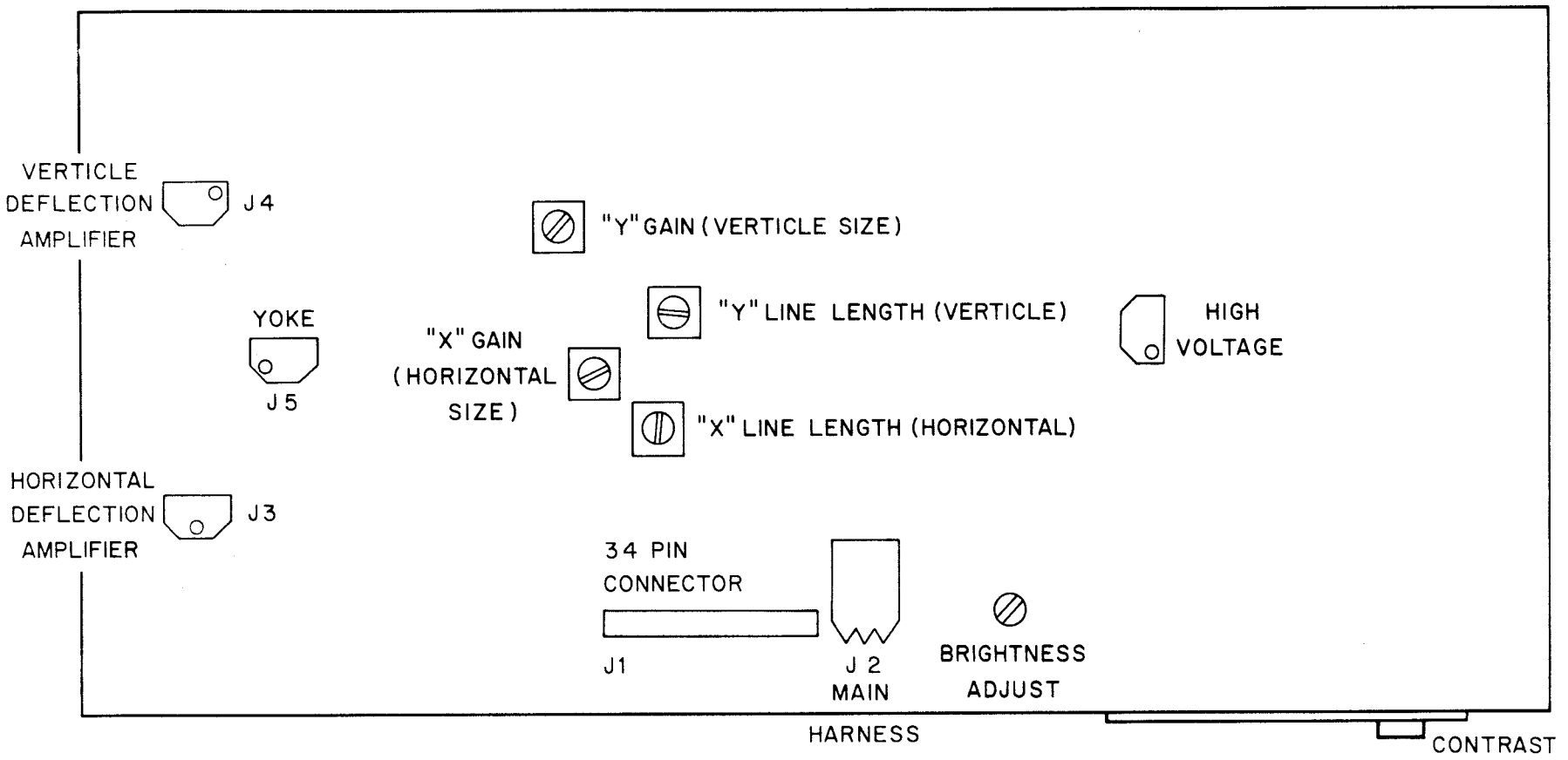

DISPLAY P.C.B.

CONNECTORS AND ADJUSTMENTS

PROPRIETARY
THIS DOCUMENT IS THE PROPERTY OF CINEMATRONICS INC. AND IS NOT TO BE REPRODUCED OR DISTRIBUTED WITHOUT WRITTEN AUTHORIZATION OF CINEMATRONICS INC.

REVISIONS			
REV	DESCRIPTION	DATE	APPROVED
B	PER ECR 0 0 3	5 MAY 80	[illegible]

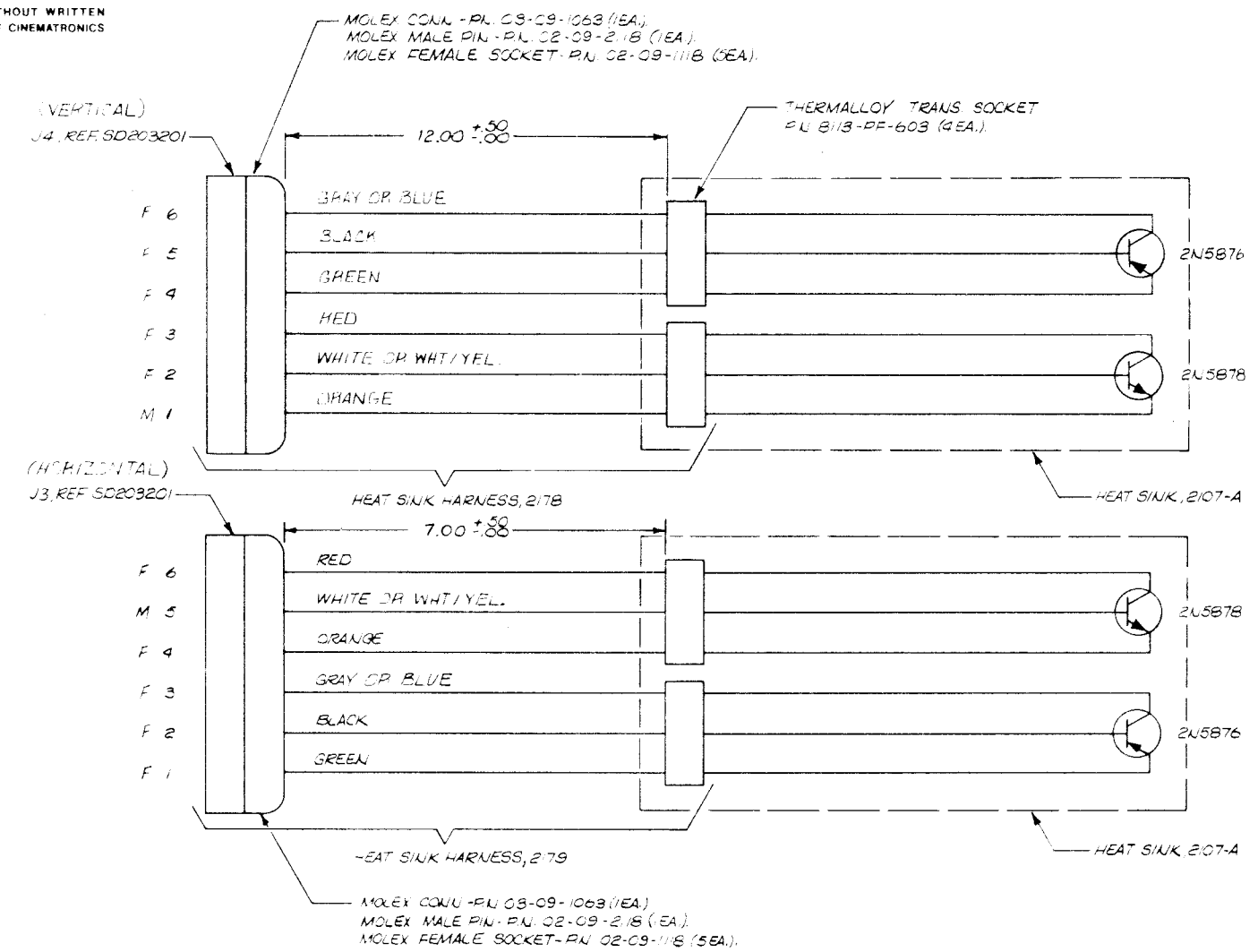

NOTES: UNLESS OTHERWISE SPECIFIED

MATERIAL:	DRAWN BY: [illegible]	DATE 8-7-79	CINEMATRONICS INC. El Cajon Ca 92020
	PROJECT ENGR:	DATE	
FINISH: BREAK ALL SHARP EDGES AND DEBURR ALL HOLES.	RELEASE APPROV:	DATE	DWG TITLE SCHEMATIC, VERTICAL & HORIZONTAL HEAT SINK ASSY.
	DO NOT SCALE DWG		
	TOLERANCE: UNLESS OTHERWISE SPECIFIED		MODEL NO. / DWG SIZE / DWG NO. 72-10969-01 / REV B
	PROJECTION:	SCALE: SCALE	CODE IDENT. / SHEET OF

SMALL HEAT SINK
IS PLACED ON TOP OF
TRANSISTOR TAB

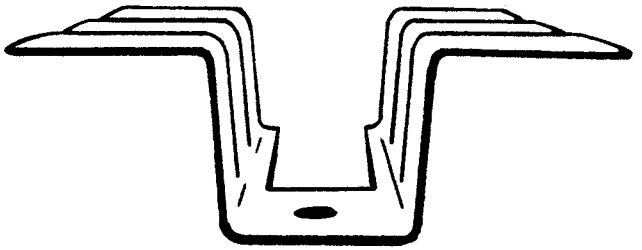

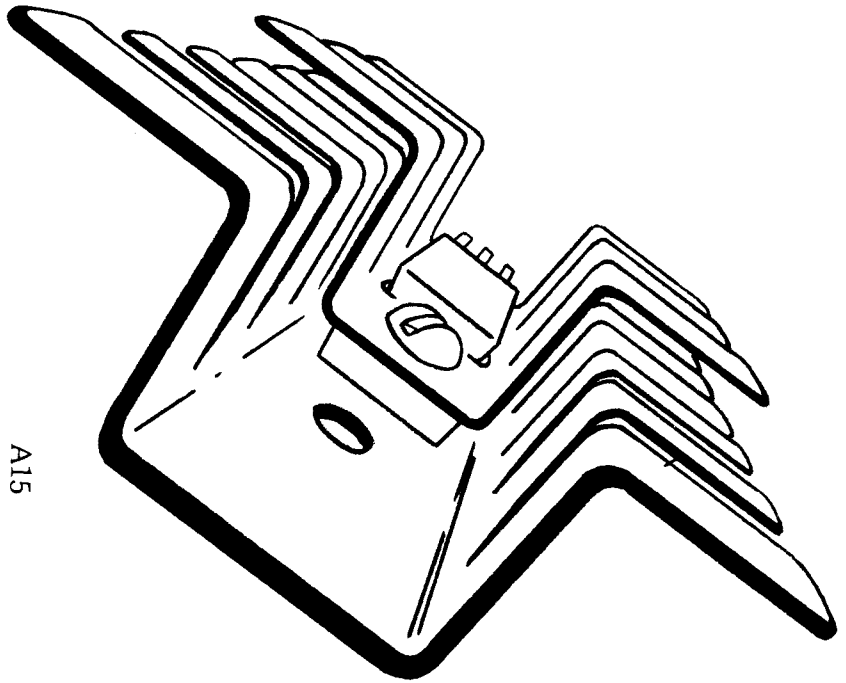

THERMAL
COMPOUND

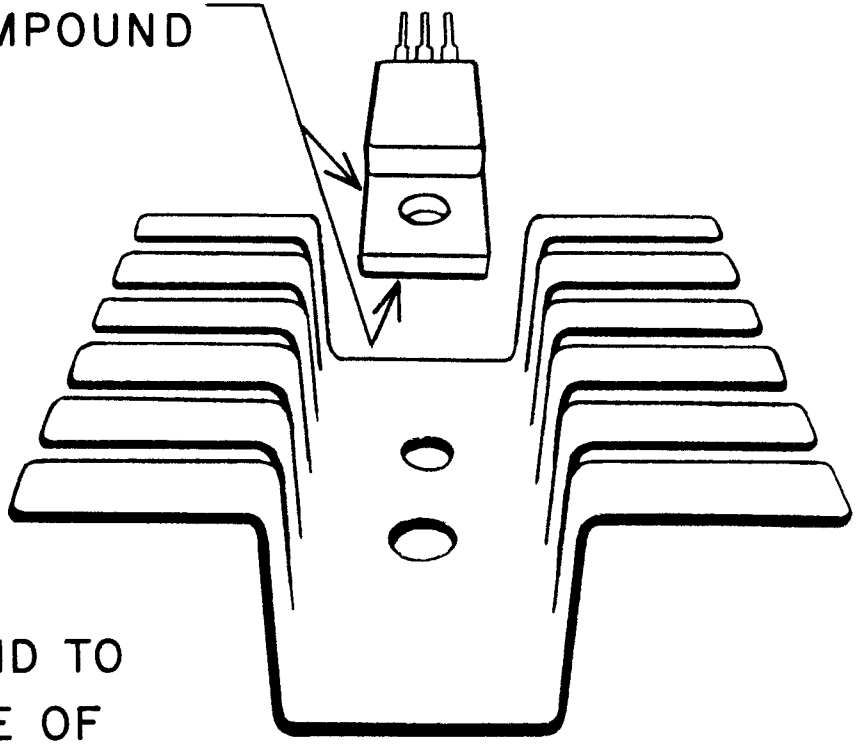

APPLY THERMAL COMPOUND TO
ENTIRE BOTTOM SURFACE OF
TRANSISTOR AND TOP OF TAB

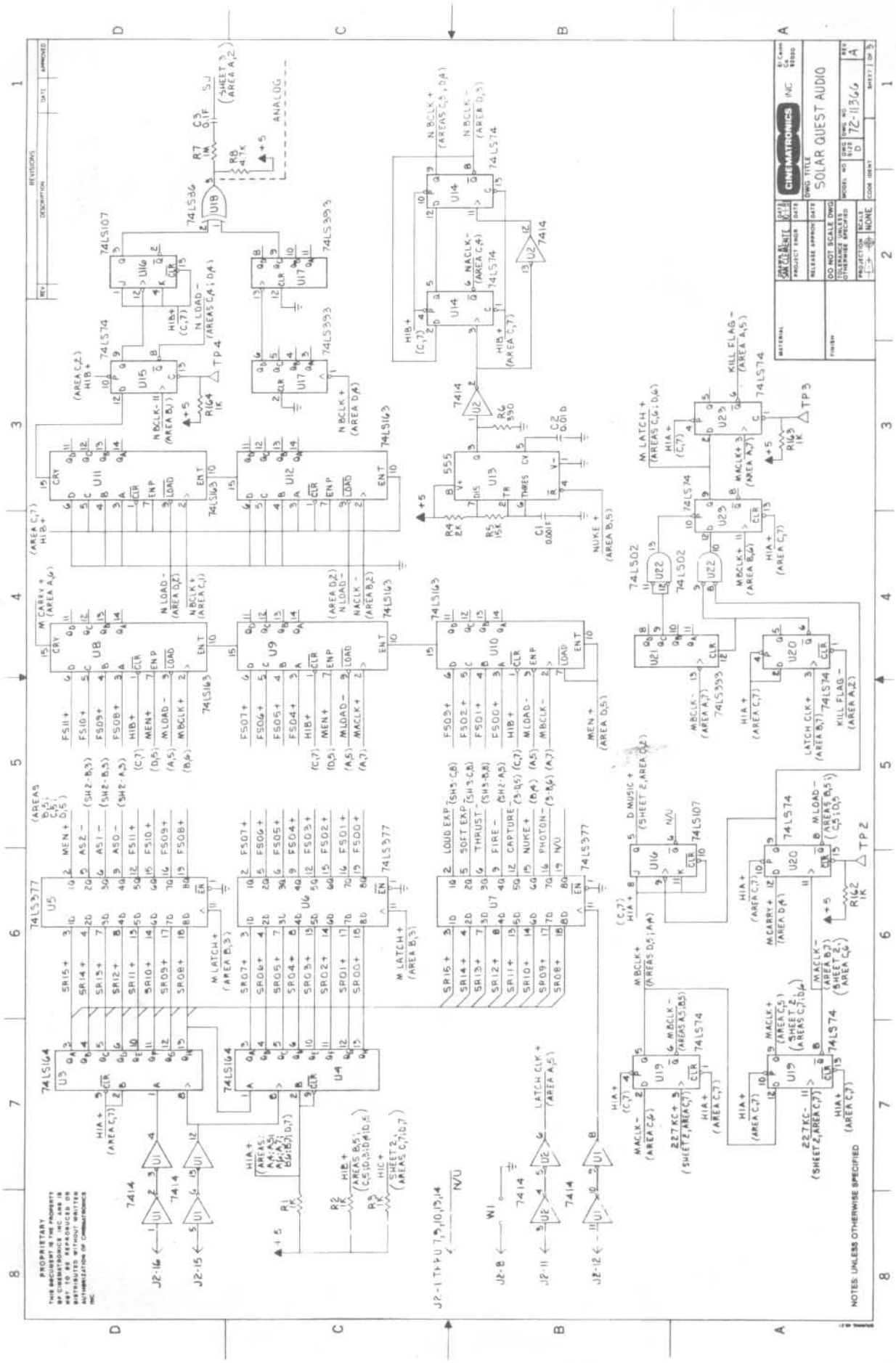
CINEMATRONICS INC
DWG TITLE
SOLAR QUEST AUDIO
72-11366
NOTES: UNLESS OTHERWISE SPECIFIED
PROPRIETARY

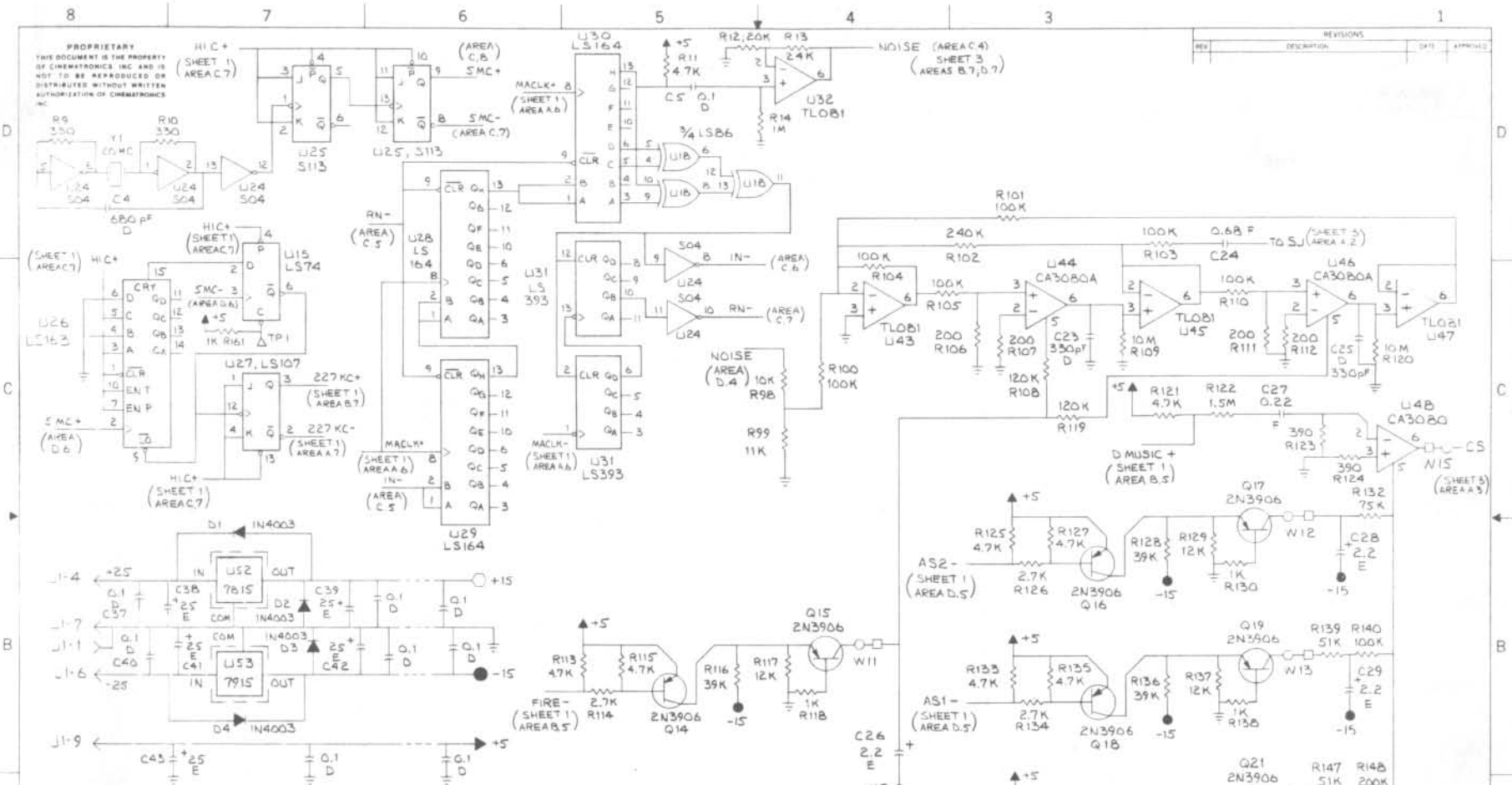

6. IC PINS NOT USED: U24-3,4; U27-5,6,8,9,10,11; U22-1,2,3,4,5,6; U2-8,9,10,11.
5. REFERENCE DESIGNATOR DELETED: R55,56,57,131
4. DIODES ARE IN914.
3. CAPACITOR VALUES ARE IN MICRO FARADS.
2. ALL RESISTORS ARE 1/4W, 5% CARBON VALUES ARE IN OHMS.
1. LAST REFERENCE DESIGNATORS: Y1, U53, R164, C89, D10, Q23, W16, TP4.

NOTES UNLESS OTHERWISE SPECIFIED

IC	+5 PIN	GND PIN
U5,6,7	20	10
U8,9, 10,11, 12	16	8
U1,2,3, 4,14,15, 16,17,18, 19,20,21, 22,23,24, 25,26,27, 28,29, 30,31	14	7

POWER DISTRIBUTION

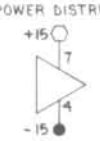

TYPICAL FOR ALL TL081 AND CA3080

CAPACITOR LEGEND

E	ELECTROLYTIC
D	DISC
T	TANTALUM
F	FILM

MATERIAL

FINISH

DRAWN BY SAN CLEMENTE DATE 10-1-81
PROJECT ENGR DATE
RELEASE APPROV DATE
DO NOT SCALE DWG
TOLERANCE UNLESS OTHERWISE SPECIFIED
PROJECTION SCALE

CINEMATRONICS INC El Cajon Ca 92020

DWG TITLE SOLAR QUEST AUDIO

MODEL NO | DWG SIZE D | DWG NO 72-11366 | REV A

CODE IDENT | SHEET 2 OF 3

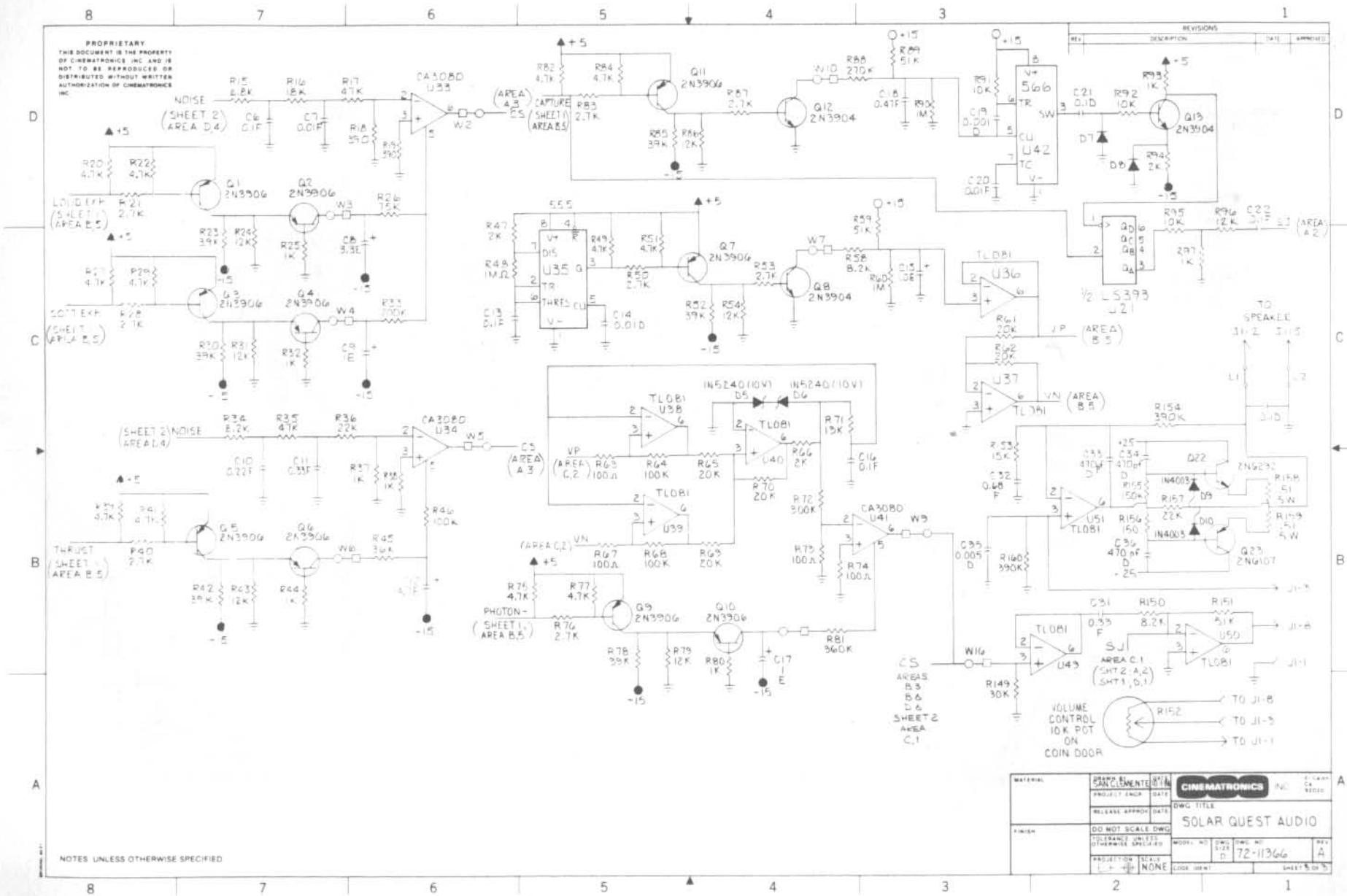
PROPRIETARY
THIS DOCUMENT IS THE PROPERTY OF CINEMATRONICS INC AND IS NOT TO BE REPRODUCED OR DISTRIBUTED WITHOUT WRITTEN AUTHORIZATION OF CINEMATRONICS INC
REVISIONS
NOISE
LOUD EXP
SOFT EXP
THRUST
PHOTON
CAPTURE
TO SPEAKER
VOLUME CONTROL 10K POT ON COIN DOOR
NOTES UNLESS OTHERWISE SPECIFIED
CINEMATRONICS INC
DWG TITLE
SOLAR QUEST AUDIO
DO NOT SCALE DWG
72-11366
NONE

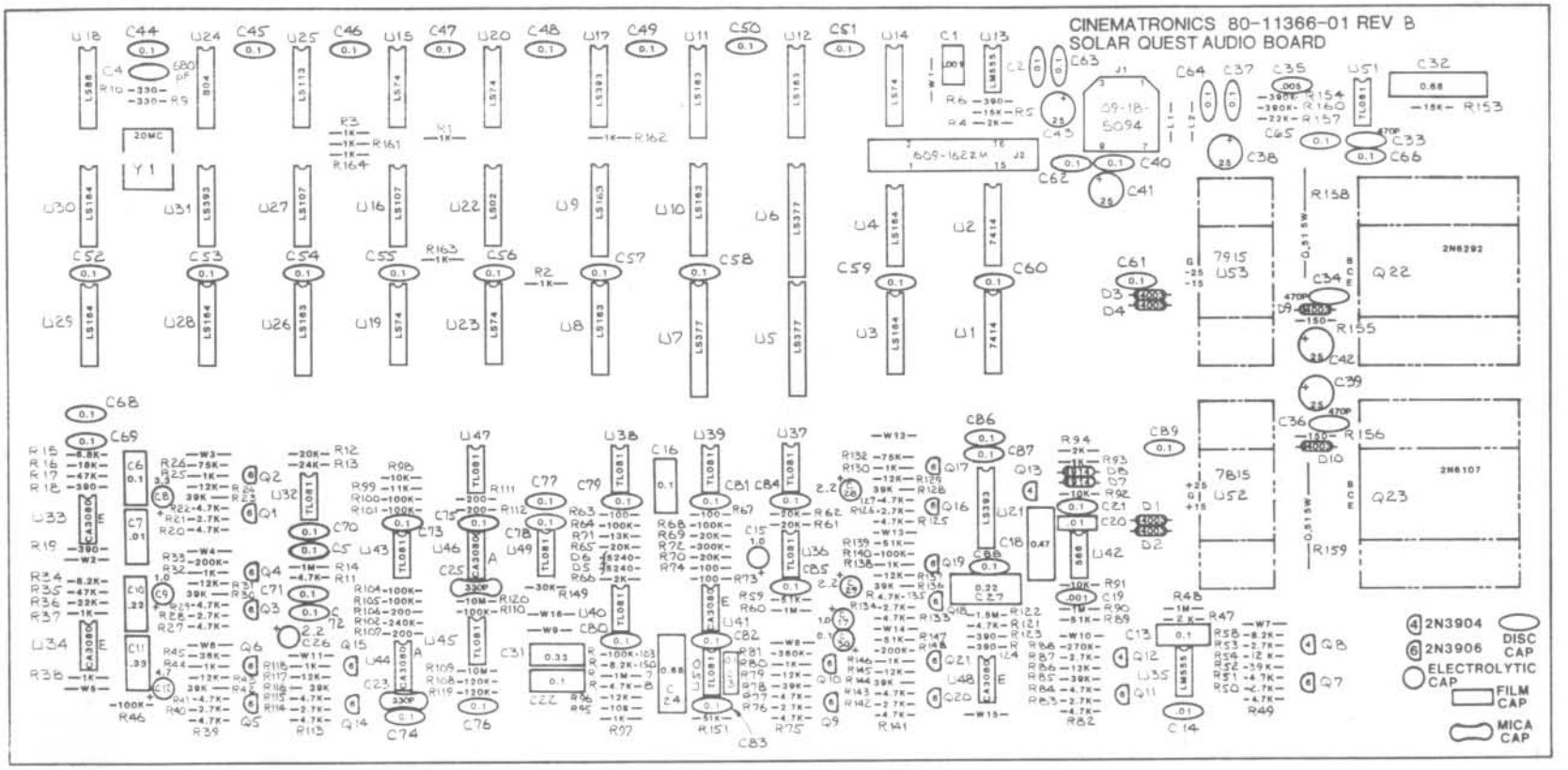

19 SEPTEMBER 1981

NOTES: UNLESS OTHERWISE SPECIFIED

1. ALL RESISTOR VALUES ARE IN OHMS, 1/4 WATT, 5% CARBON
2. CAPACITOR VALUES ARE IN MICRO FARADS
3. CHECK TRANSISTOR AND CAPACITOR LEGEND ABOVE TITLE BLOCK, AT RIGHT

MATERIAL	DRAWN BY: Dave Scott	DATE	CINEMATRONICS INC El Cajon Ca 92020
	PROJECT ENGR.	DATE	
	RELEASE APPROV.	DATE	DWG TITLE: SOLAR QUEST AUDIO BOARD
FINISH	DO NOT SCALE DWG		
	TOLERANCE UNLESS OTHERWISE SPECIFIED		MODEL NO. / DWG SIZE D / DWG NO. 11366 / REV B
	PROJECTION: SCALE 2:1		CODE IDENT. / SHEET 1 OF 1

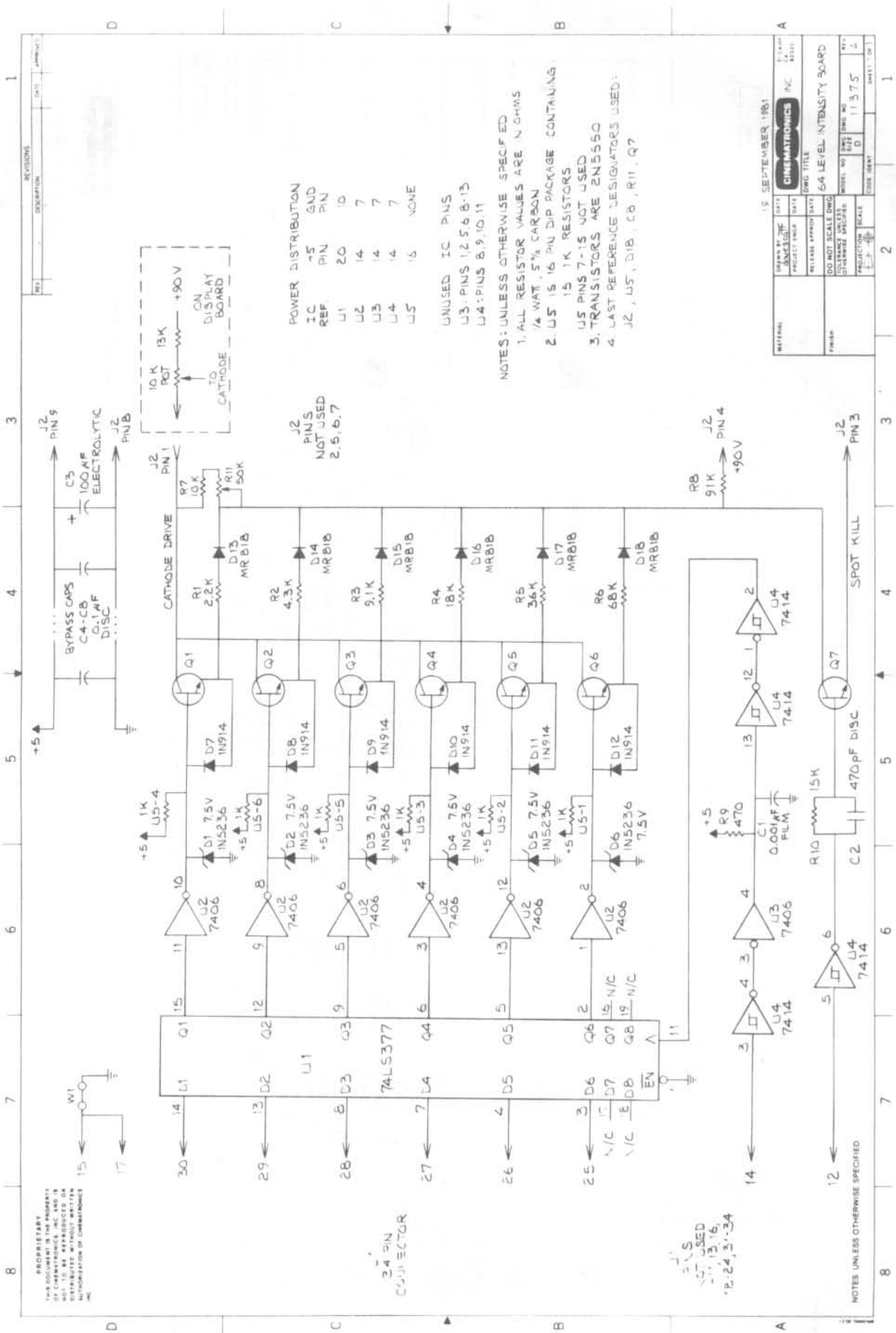

POWER DISTRIBUTION
IC REF | +5 PIN | GND PIN
U1 | 20 | 10
U2 | 14 | 7
U3 | 14 | 7
U4 | 14 | 7
U5 | 16 | NONE
UNUSED IC PINS
U3: PINS 1,2,5,6,8-13
U4: PINS 8,9,10,11
NOTES: UNLESS OTHERWISE SPECIFIED
1. ALL RESISTOR VALUES ARE IN OHMS
1/4 WATT, 5% CARBON
2. U5 IS 16 PIN DIP PACKAGE CONTAINING
15 1K RESISTORS
U5 PINS 7-15 NOT USED
3. TRANSISTORS ARE 2N5550
4. LAST REFERENCE DESIGNATORS USED:
J2, U5, D18, C8, R11, Q7
19 SEPTEMBER 1981
CINEMATRONICS INC
64 LEVEL INTENSITY BOARD
11375
CATHODE DRIVE
SPOT KILL
BYPASS CAPS C4-C8 0.1µF DISC
C3 100µF ELECTROLYTIC
10K POT
13K
+90V
ON DISPLAY BOARD
TO CATHODE
J2 PIN 1
J2 PIN 9
J2 PIN 8
J2 PIN 4
J2 PIN 3
J2 PINS NOT USED 2,5,6,7
R7 10K
R11 50K
R8 91K
R1 2.2K
R2 4.3K
R3 9.1K
R4 18K
R5 36K
R6 68K
D13 MR818
D14 MR818
D15 MR818
D16 MR818
D17 MR818
D18 MR818
Q1
Q2
Q3
Q4
Q5
Q6
Q7
D7 1N914
D8 1N914
D9 1N914
D10 1N914
D11 1N914
D12 1N914
D1 7.5V 1N5236
D2 7.5V 1N5236
D3 7.5V 1N5236
D4 7.5V 1N5236
D5 7.5V 1N5236
D6 1N5236 7.5V
U5-4
U5-6
U5-5
U5-3
U5-2
U5-1
U2 7406
U3 7406
U4 7414
R9 470
C1 0.001µF FILM
R10 15K
C2 470pF DISC
U1 74LS377
W1
24 PIN CONNECTOR
NOTES UNLESS OTHERWISE SPECIFIED
PROPRIETARY

PROPRIETARY
THIS DOCUMENT IS THE PROPERTY OF CINEMATRONICS, INC. AND IS NOT TO BE REPRODUCED OR DISTRIBUTED WITHOUT WRITTEN AUTHORIZATION OF CINEMATRONICS, INC.

REVISIONS			
REV	DESCRIPTION	DATE	APPROVED

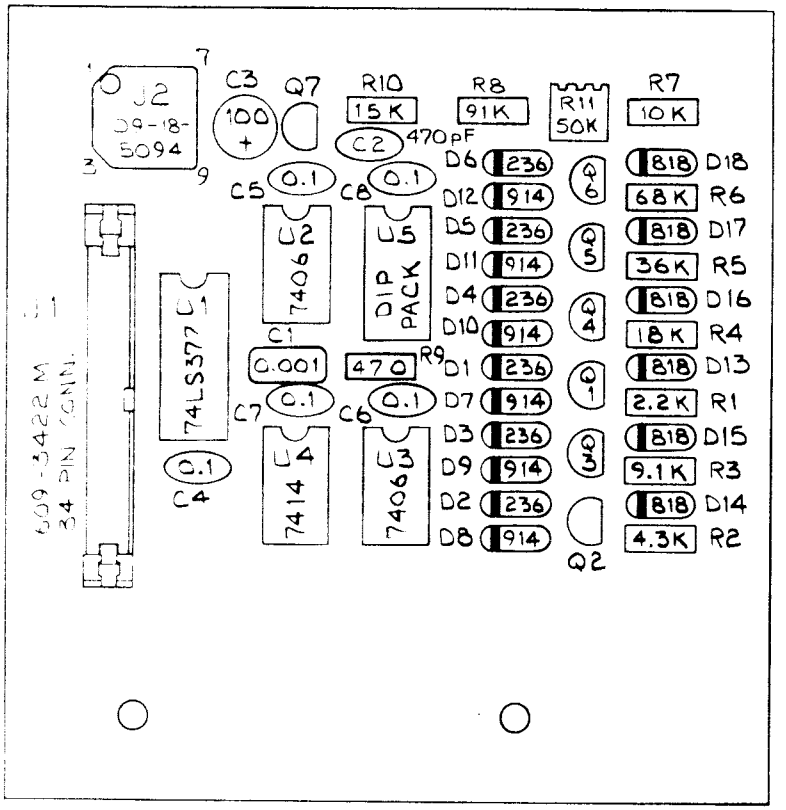

NOTES: UNLESS OTHERWISE SPECIFIED

1. RESISTOR VALUES ARE IN OHMS
2. RESISTORS ARE 1/4 WATT, 5% CARBON
3. CAPACITOR VALUES ARE IN MICRO FARADS
4. CAPACITOR LEGEND
   - ◯ ELECTROLYTIC
   - ▭ FILM
   - ⬭ DISC
5. ALL TRANSISTORS ◯ ARE 2N5550
6. DIODE LEGEND
   - 236 1N5236 (7.5 V)
   - 914 1N914
   - 818 MR818

18 SEPTEMBER 1981

MATERIAL	DRAWN BY davescott	DATE	CINEMATRONICS INC El Cajon Ca. 92020
	PROJECT ENGR	DATE	
	RELEASE APPROV	DATE	DWG TITLE: 64 LEVEL INTENSITY BOARD
FINISH	DO NOT SCALE DWG		
	TOLERANCE UNLESS OTHERWISE SPECIFIED		MODEL NO. / DWG SIZE C / DWG NO. 11375 / REV X1
	PROJECTION	SCALE 2:1	CODE IDENT. / SHEET 1 OF 1

NOTES UNLESS OTHERWISE SPECIFIED

CINEMATRONICS
INCORPORATED

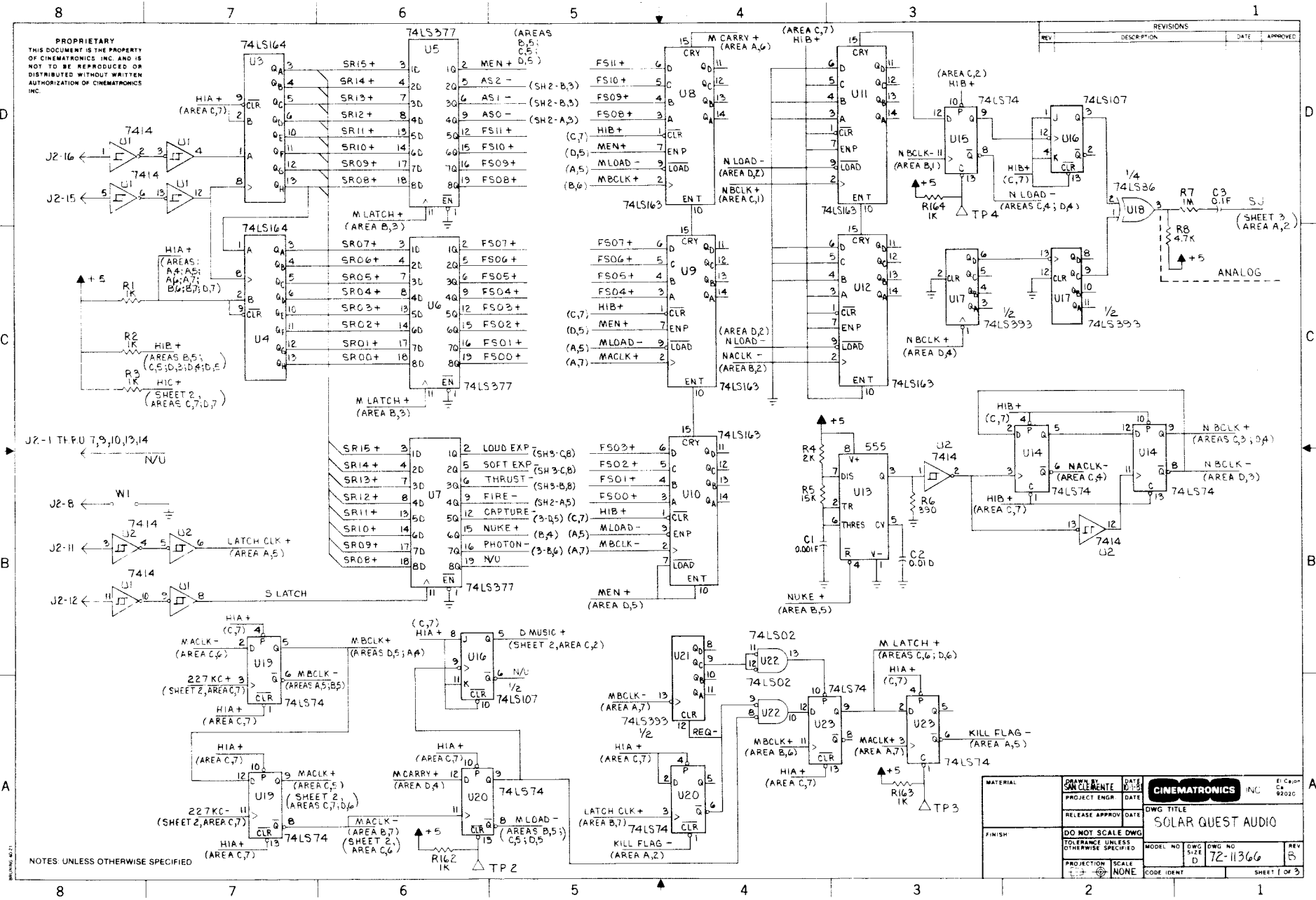
PROPRIETARY
THIS DOCUMENT IS THE PROPERTY OF CINEMATRONICS, INC. AND IS NOT TO BE REPRODUCED OR DISTRIBUTED WITHOUT WRITTEN AUTHORIZATION OF CINEMATRONICS INC.
REVISIONS
REV
DESCRIPTION
DATE
APPROVED
74LS164
U3
U4
74LS377
U5
U6
U7
74LS163
U8
U9
U10
U11
U12
74LS74
U15
U16
U17
74LS107
74LS86
U18
74LS393
555
U13
U14
U19
U20
U21
U22
U23
7414
J2-16
J2-15
J2-1 THRU 7,9,10,13,14
J2-8
J2-11
J2-12
LATCH CLK +
S LATCH
ANALOG
NOTES: UNLESS OTHERWISE SPECIFIED
MATERIAL
FINISH
DRAWN BY SAN CLEMENTE
PROJECT ENGR.
RELEASE APPROV.
DO NOT SCALE DWG
TOLERANCE UNLESS OTHERWISE SPECIFIED
PROJECTION
SCALE NONE
CINEMATRONICS INC
El Cajon Ca 92020
DWG TITLE
SOLAR QUEST AUDIO
MODEL NO
DWG SIZE D
DWG NO 72-11366
REV B
CODE IDENT
SHEET 1 OF 3

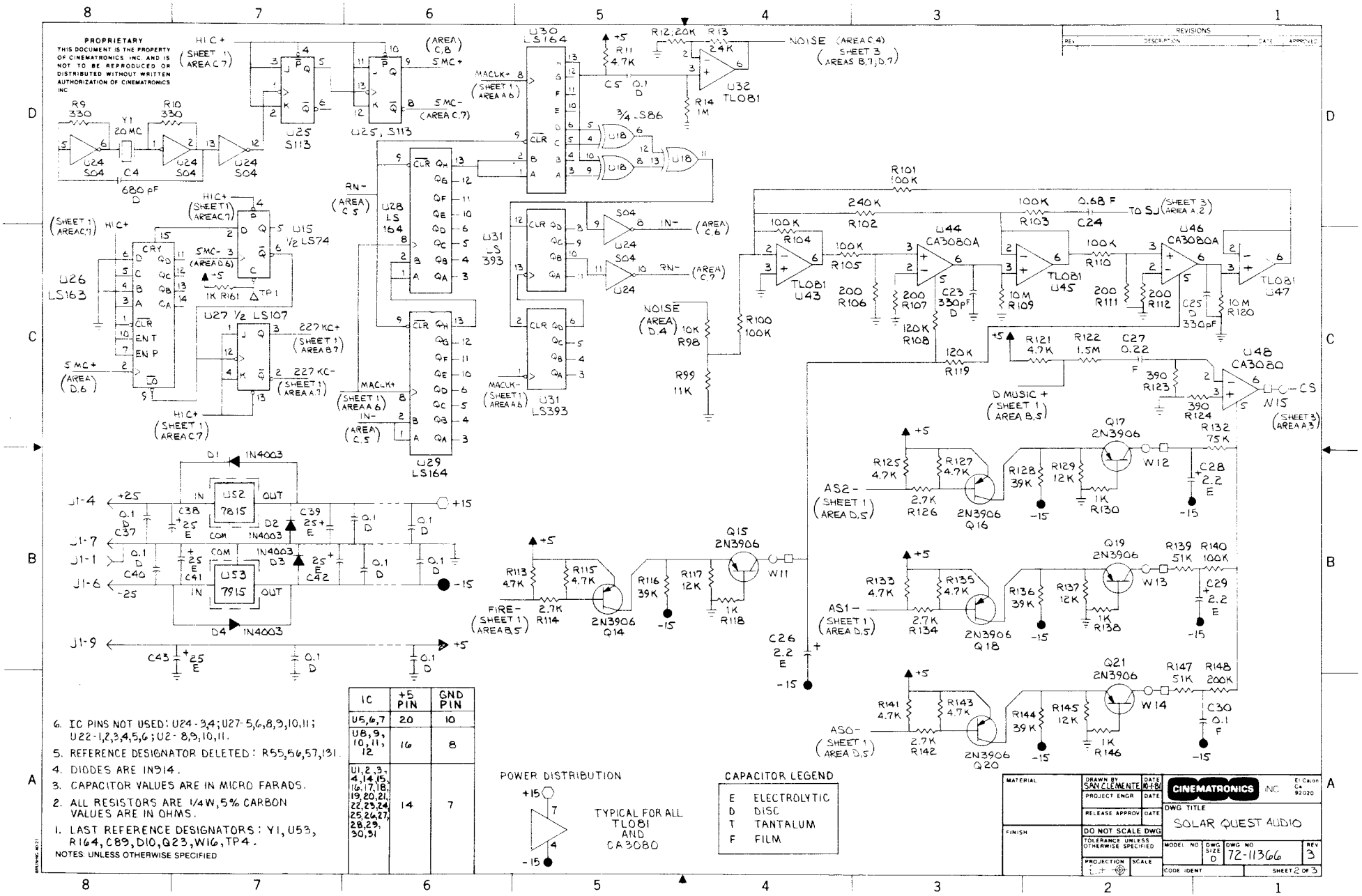

IC	+5 PIN	GND PIN
U5,6,7	20	10
U8,9, 10,11, 12	16	8
U1,2,3, 4,14,15, 16,17,18, 19,20,21, 22,23,24, 25,26,27, 28,29, 30,31	14	7

6. IC PINS NOT USED: U24-3,4; U27-5,6,8,9,10,11; U22-1,2,3,4,5,6; U2-8,9,10,11.
5. REFERENCE DESIGNATOR DELETED: R55,56,57,131.
4. DIODES ARE IN914.
3. CAPACITOR VALUES ARE IN MICRO FARADS.
2. ALL RESISTORS ARE 1/4W, 5% CARBON VALUES ARE IN OHMS.
1. LAST REFERENCE DESIGNATORS: Y1, U53, R164, C89, D10, Q23, W16, TP4.

NOTES: UNLESS OTHERWISE SPECIFIED

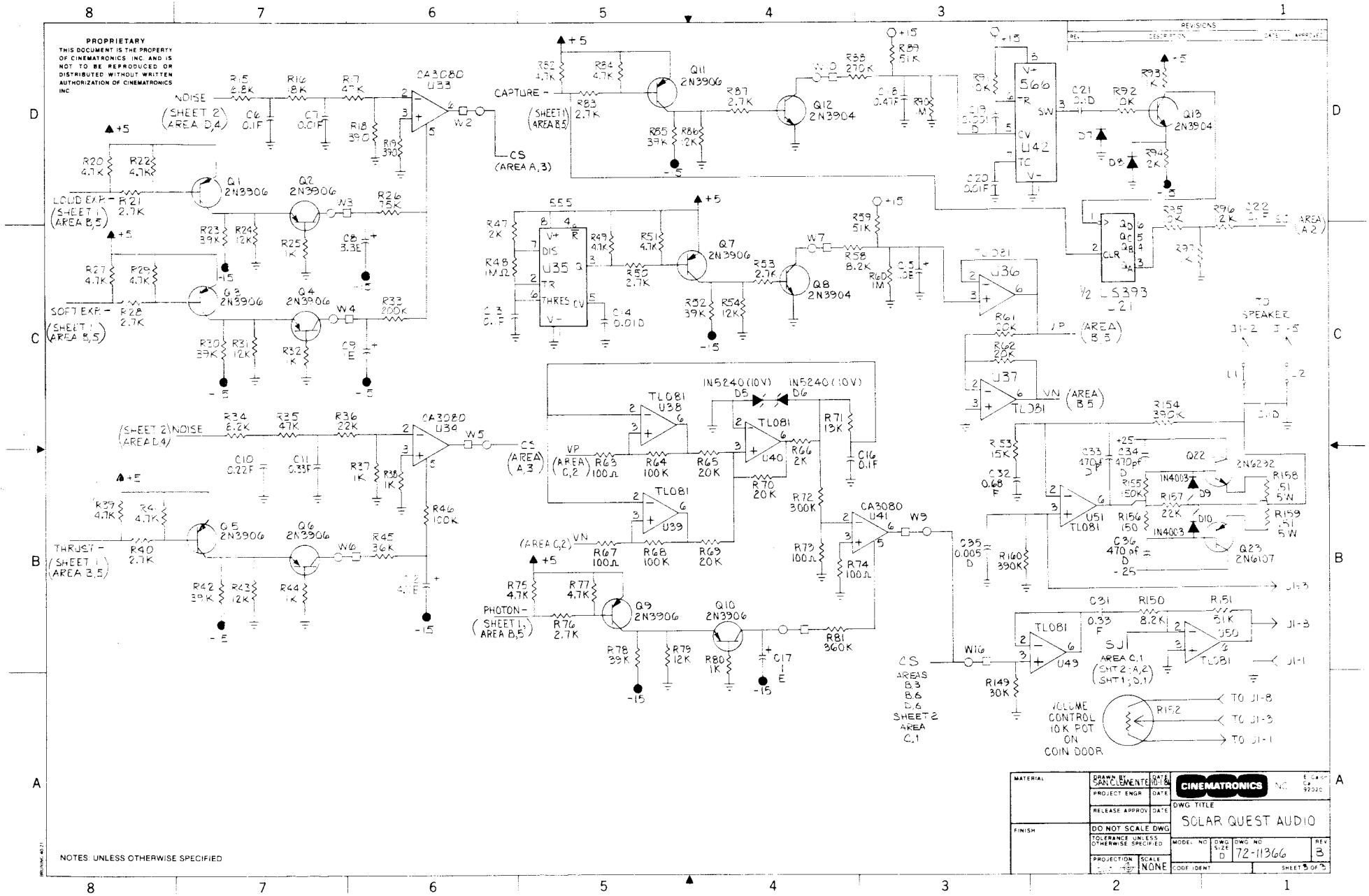
PROPRIETARY
THIS DOCUMENT IS THE PROPERTY OF CINEMATRONICS INC. AND IS NOT TO BE REPRODUCED OR DISTRIBUTED WITHOUT WRITTEN AUTHORIZATION OF CINEMATRONICS INC
NOISE (SHEET 2 AREA D,4)
CAPTURE (SHEET 1 AREA B,5)
CS (AREA A,3)
LOUD EXP. (SHEET 1 AREA B,5)
SOFT EXP. (SHEET 1 AREA B,5)
(SHEET 2) NOISE (AREA D,4)
THRUST (SHEET 1 AREA B,5)
PHOTON (SHEET 1, AREA B,5)
CS AREAS B,3 B,6 D,6 SHEET 2 AREA C,1
VOLUME CONTROL 10K POT ON COIN DOOR
TO SPEAKER
REVISIONS
MATERIAL
FINISH
DRAWN BY SAN CLEMENTE
PROJECT ENGR
RELEASE APPROV
DO NOT SCALE DWG
TOLERANCE UNLESS OTHERWISE SPECIFIED
PROJECTION
SCALE NONE
CINEMATRONICS INC
DWG TITLE
SOLAR QUEST AUDIO
MODEL NO
DWG SIZE D
DWG NO 72-11366
REV B
CODE IDENT
SHEET 3 OF 3
NOTES: UNLESS OTHERWISE SPECIFIED