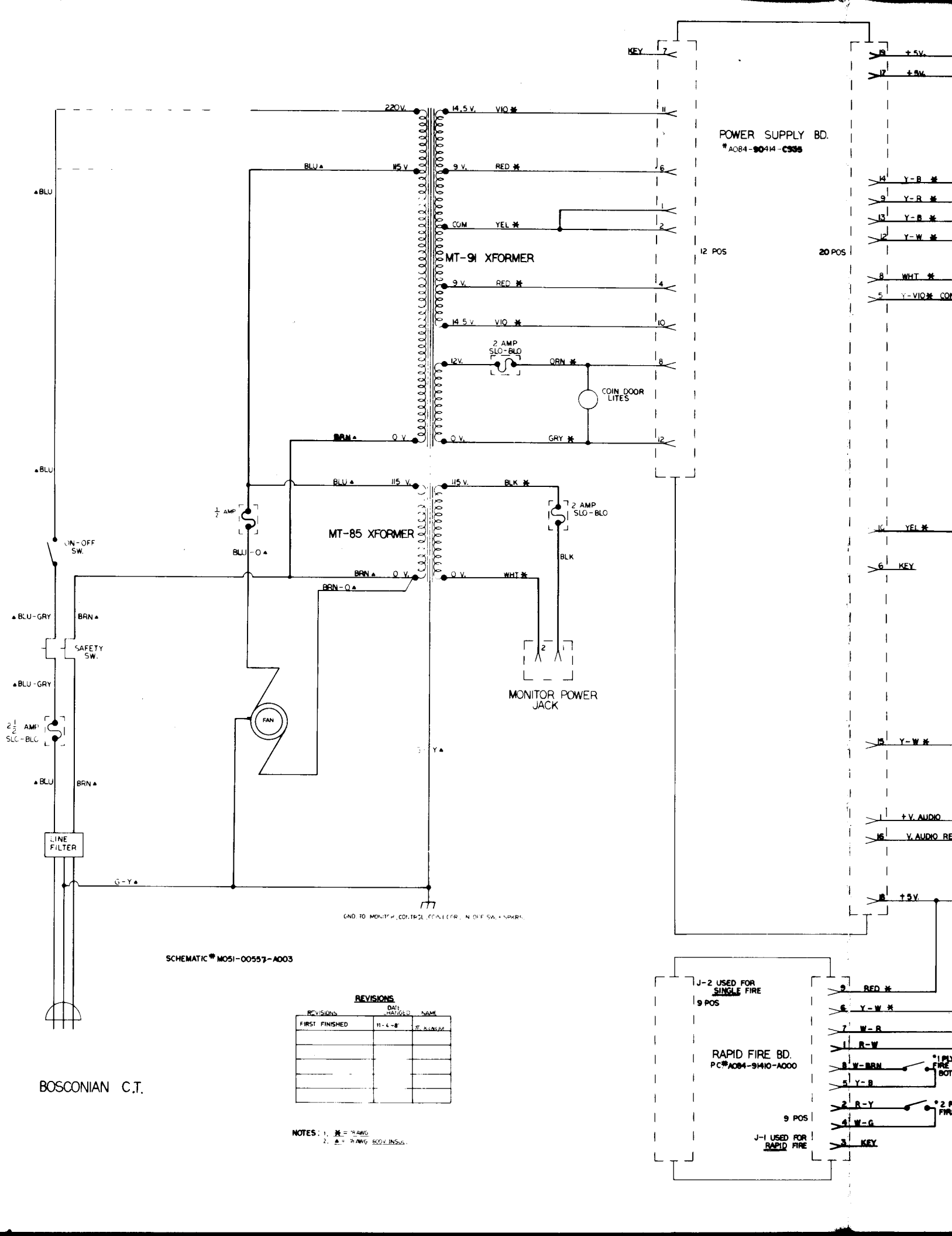

SCHEMATIC * M051-00557-A003

BOSCONIAN C.T.

REVISIONS

REVISIONS	DATE CHANGED	NAME
FIRST FINISHED	11-4-81	M. KENNEDY

NOTES: 1. * = 18 AWG
2. ▲ = 18 AWG 600 V. INSUL.

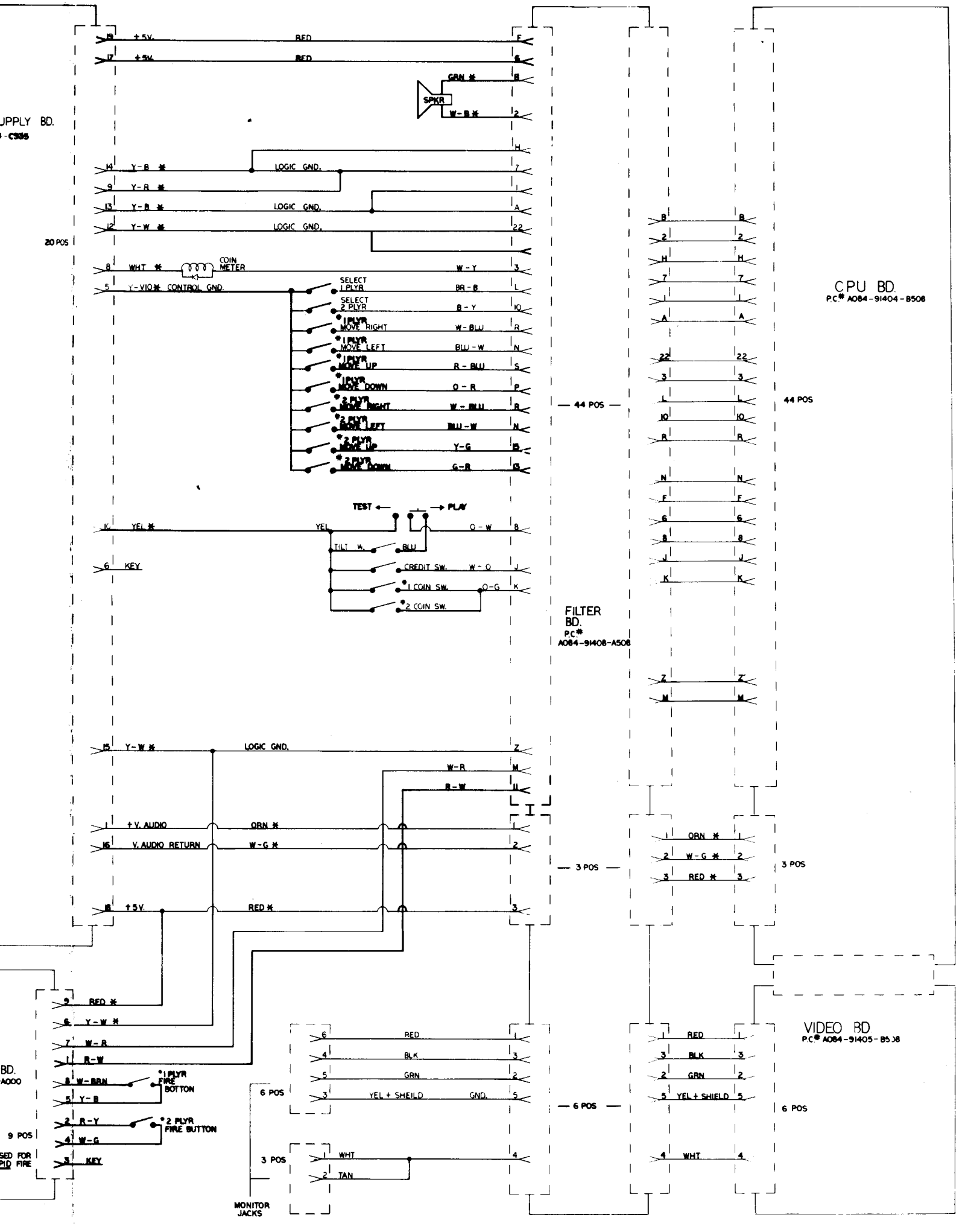
UPPLY BD.
-C935
20 POS
+5V.
RED
+5V.
RED
GRN *
SPKR
W-B *
Y-B *
LOGIC GND.
Y-R *
Y-B *
LOGIC GND.
Y-W *
LOGIC GND.
WHT *
COIN METER
W-Y
Y-VIO *
CONTROL GND.
SELECT 1 PLYR
BR-B
SELECT 2 PLYR
B-Y
*1 PLYR MOVE RIGHT
W-BLU
*1 PLYR MOVE LEFT
BLU-W
*1 PLYR MOVE UP
R-BLU
*1 PLYR MOVE DOWN
O-R
*2 PLYR MOVE RIGHT
W-BLU
*2 PLYR MOVE LEFT
BLU-W
*2 PLYR MOVE UP
Y-G
*2 PLYR MOVE DOWN
G-R
TEST
PLAY
YEL *
YEL
O-W
TILT
W.
BLU
KEY
CREDIT SW.
W-O
*1 COIN SW.
O-G
*2 COIN SW.
44 POS
FILTER BD.
P.C.*
A084-91408-A508
CPU BD.
P.C.* A084-91404-B508
44 POS
Y-W *
LOGIC GND.
W-R
R-W
+V. AUDIO
ORN *
V. AUDIO RETURN
W-G *
+5V.
RED *
3 POS
ORN *
W-G *
RED *
3 POS
RED *
Y-W *
W-R
R-W
W-BRN
*1 PLYR FIRE BOTTON
Y-B
R-Y
*2 PLYR FIRE BUTTON
W-G
KEY
9 POS
SED FOR
PID FIRE
BD.
A000
6 POS
RED
BLK
GRN
YEL + SHEILD
GND.
6 POS
RED
BLK
GRN
YEL + SHIELD
6 POS
VIDEO BD
P.C.* A084-91405-B508
3 POS
WHT
TAN
WHT
MONITOR JACKS

DESIGNATION	DESCRIPTION
C1	10000 MF 35V AX. ELEC.
C2	.01 MF 50V AX.CER.
C3	1MF 25V TANT.
C4	20000 MF 16V AX. ELEC.
C5	100 PF 50V AX.CER
C6	470 MF 16V AX. ELEC.
C7	4700 MF 25V " "
R1	470 OHM 1/4W 5% CRBN
R2	100 " " " "
R3	2.7K " " " "
R4	560 " " " "
R5	510 " " " "
R6	10 " " " "
VR1	100 OHM 1/4W CRBN. FLM.
D1, D2	A14F
D3	IN4004
D4, D5	MR750
D6-D9	A15F
D10	A14F
Q1	TIP31
Q2	2N3055
U1	LM317
U2	3532
L1	FERROXCUBE BEAD
HS1	HEAT SINK
F1	FUSE 2A
F2	" 8A
F3	" 8A
FC1A, FC1B, FC2A FC2B, FC3A, FC3B	FUSECLIP W/ STOP " "
J1	CONN. KK.156 (RA)(5-PIN)(6-PIN)
J2	" " (RA)(5-PIN)(13-PIN)
MHQ1	MOUNTING HARDWARE Q1 (1) SCREW 4-40X10 SLT RND (1) WSH.4 120-.250-018 (1) HEXNUT 4-40 (1) SHOULDER WSH. 974-302 THERMAL COMPOUD AS REQ. (1) TO-220 INSULATOR RT-3.5 MICA
MHQ2	MOUNTING HARDWARE Q2 (2) SCREW 4-40X10 SLT RND (2) WSH 4 120- 250-018 (2) HEXNUT 4-40 (2) SHOULDER WSH. 974-302 THERMAL COMPOUD AS REQ. (1) TO-3 RT-1.5 FILM
MHU1	MOUNTING HARDWARE U1 (1) SCREW 4-40X10 SLT RND (1) WSH 4 120-.250-018 (1) HEXNUT 4-40 (1) SHOULDER WSH. 974-302 THERMAL COMPOUD AS REQ (1) TO-220 INSULATOR RT-3.5 MICA
TW1-TW3	TIE WRAPS

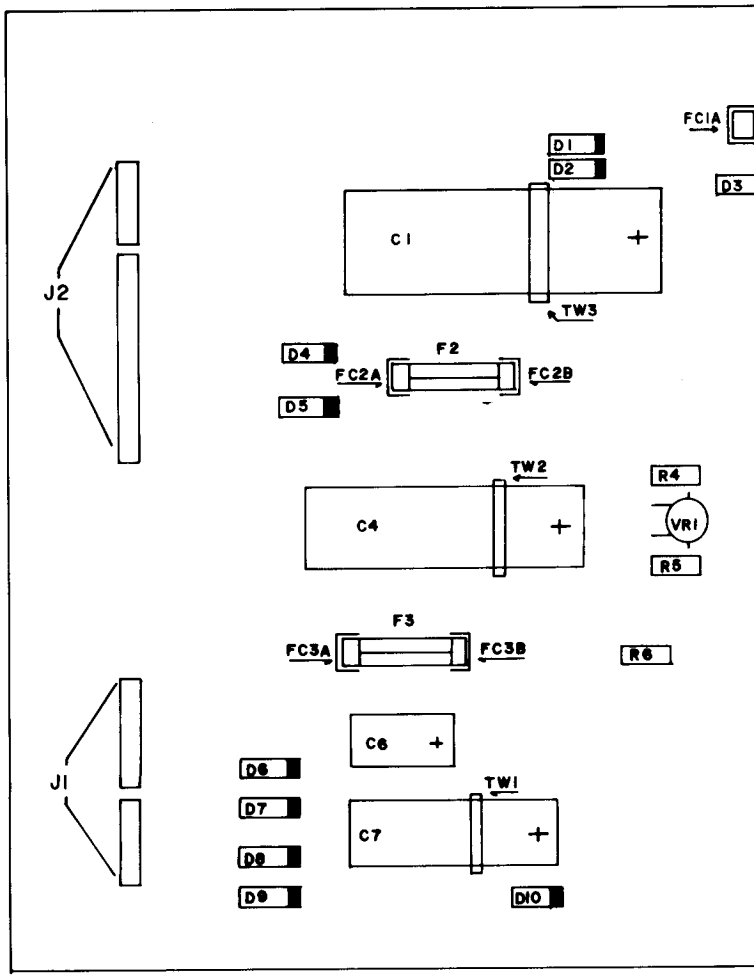

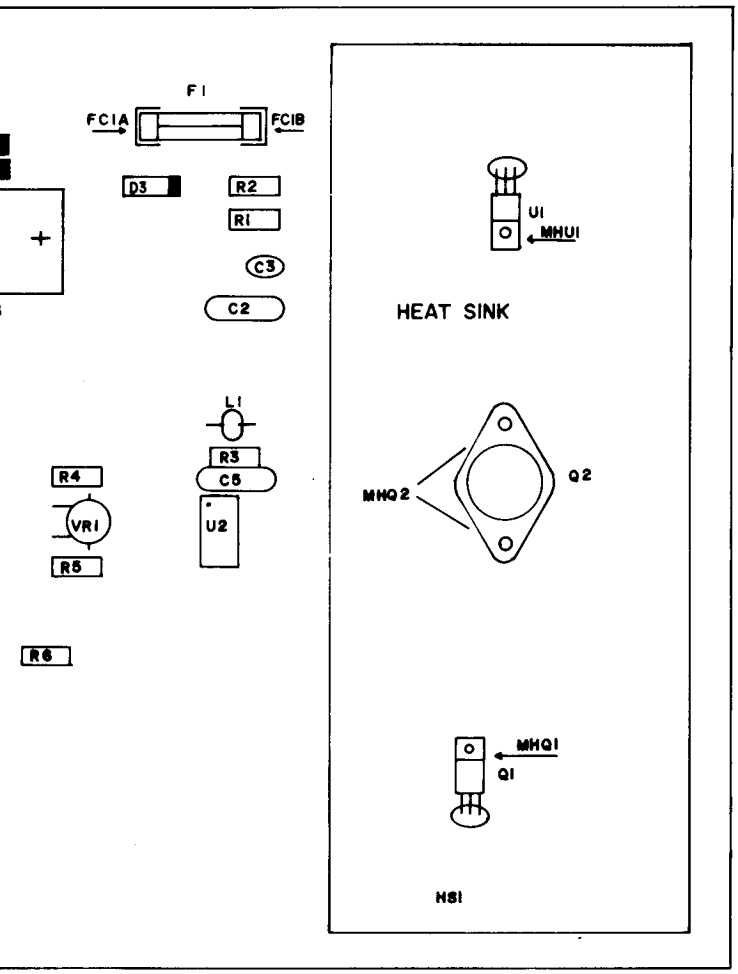

DESCRIPTION	QTY	DESIGNATION	PART NUMBER
100 PF 50v AX.CER.	1	C5	**0508-00800-2100**
.01MF " " "	1	C2	0171-097H2-JXXX
1MF 25v TANT.	1	C3	0935-00814-0100
470MF " AX.ELEC.	1	C6	0175-271EX-EXXX
4700MF " " "	1	C7	**0508-00800-2200**
10000MF 35v AX.ELEC.	1	C1	0175-322GX-EXBX
20000 16v MF " "	1	C4	0935-00814-0800
10 OHM 1/4w 5% CBN	1	R6	0062-051B3-1XXX
100 " " " "	1	R2	0062-110B3-1XXX
470 " " " "	1	R1	0062-156B3-1XXX
510 " " " "	1	R5	0062-159B3-1XXX
560 " " " "	1	R4	0062-162B3-1XXX
2.7K " " " "	1	R3	0062-199B3-1XXX
100 " " CBN FLM	1	VR1	0063-025AX-1DEX
1N4004	1	D3	0508-00801-0200
A14F	3	D1,D2,D10	0064-168XX-XXGX
A15F	4	D6-D9	0064-169XX-XXGX
MR750	2	D4,D5	0064-303XX-XXJX
TIP31	1	Q1	0065-485XX-XXXX
2N3055	1	Q2	0935-00800-0000
3532	1	U2	0066-044BX-XXXX
LM317	1	U1	0935-00804-3600
FERROXCUBE BEAD	1	L1	0017-00009-0225
HEAT SINK	1	HS1	0068-045XX-ABDX
FUSE 2A	1	F1	0017-00003-0005
FUSE 6A	1	F3	0017-00003-0008
FUSE 8A	1	F2	0017-00003-0184
FUSECLIP	6	FC1A,FC1B,FC2A, FC2B,FC3A,FC3B	0017-00003-0214
KK 156 (RA) (5)	2	J1,J2	3000-16387-0500
KK 156 (RA) (6)	1	J1	3000-16387-0600
KK 156 (RA) (13)	1	J2	3000-16387-1300
SCREW 4-40x10	4	MHU1,MHQ1,MHQ2	0017-00101-0727
WSH 4 120-.250-018	4	" " "	0017-00104-0071
HEXNUT 4-40	4	" " "	0017-00103-0002
SHOULDER WSH	4	" " "	0017-00042-0109
THERMAL COMPOUND	AS REQ.	" " "	0017-00009-0204
TO-220 INSULATOR	2	MHU1,MHQ1	0017-00003-0205
TO-3 INSULATOR	1	MHQ2	0017-00042-0108
TIE WRAPS	3	TW1-TW3	0017-00042-0105
PCB	1	———	**A080-90414-C955**

THIS DWG IS CONFIDENTIAL & PROPERTY OF MIDWAY MFG CO

DIM TOLERANCES UNLESS OTHERWISE SPEC
CONCENTRICITY T I R .002
FRACTIONAL ± 1/64
DECIMAL ± .005
HOLE DIA + .002 - .000
ANGLE ± 1/2°
DO NOT SCALE DWG

FIRST USE ON: RALLY-X
DRN: MAM
DATE: 2/9/82
SCALE:
MECH CHK:
MAT'L:
ENG CHK: Y.S.
FINISH:

MIDWAY MFG. CO.
FRANKLIN PK., IL 60131 A BALLY CO

ASSEMBLY DRWNG
PWR. SUPP.
A084-90414-C955

REVISIONS

PART NO
M051-00955-C028

DESIGNATION LIST

DESIGNATION	DESCRIPTION
C1, C2	.1MF 100V MYLAR
C3-C7	.01MF 25V AX CER
R1-R4	1MEG OHM 1/4w 5% CRBN RES
R5	1K " " " " "
R6	68 " " " " "
R7	1K " " " " "
R8	68 " " " " "
U1	LM556
U2	7400
J1, J2	KK.156 VERT 2(6-PIN) 2(2-PIN)
MH1-MH4	SNAP BUSHING 1/4"

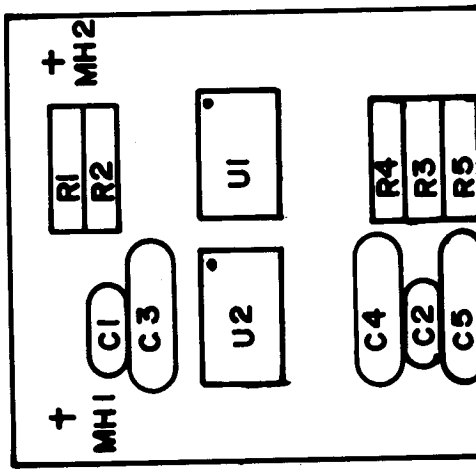

PROJECT ENG: JERRY SZERSZ

DIM. TOLERANCES UNLESS OTHERWISE SPEC	
CONCENTRICITY T I R	002
FRACTIONAL	± 1/64
DECIMAL	± 005
HOLE DIA	+ 002 -- 000
ANGLE	± 1/2°
DO NOT SCALE DWG	

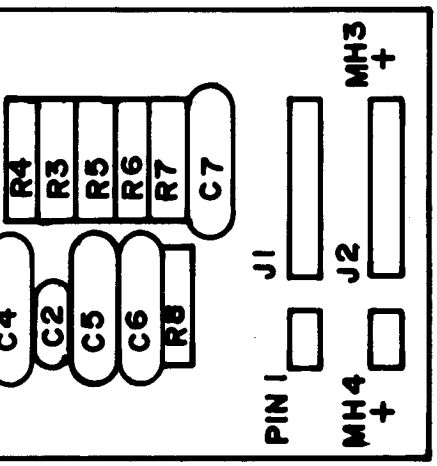

CROSS REFERENCE LIST

DESCRIPTION	QUANTITY	DESIGNATION	PART #
.01MF 25VAXCER	5	C3-C7	0508-00800-0800
.1MF 100V 10% MYLAR	2	C1, C2	0508-00800-2300
68 OHM 1/4w 5% CRBN RES.	2	R6,R8	0062-09883-1XXX
1K " " " " "	2	R5,R7	0062-17983-1XXX
1MEG " " " " "	4	R1-R4	0062-32383-1XXX
LM556	1	U1	0508-00803-5500
7400	1	U2	0508-00803-5600
KK.156 CON. (2-PIN)	2	J1,J2	3000-16335-0200
(6-PIN)	2	J1,J2	3000-16335-0600
MOUNTING HARDWARD SNAP BUSHING 1/4"	4	MH1-MH4	0017-00042-0014
RAPID FIRE P.C	1	A080-91410-A000	A080-91410-A000

ERSZEN

THIS DWG IS CONFIDENTIAL & PROPERTY OF MIDWAY MFG. CO.

GALAGA

DATE 09-30-81

SCALE FULL

MIDWAY MFG. CO.
FRANKLIN PK., IL. 60131 A BALLY CO.

RAPID FIRE P.C.
ASSEMBLY DRAWING
A082-91410-A000

REVISIONS

PART NO
M·0·5·1 -0·0·1·1·4 -A·0·0·1

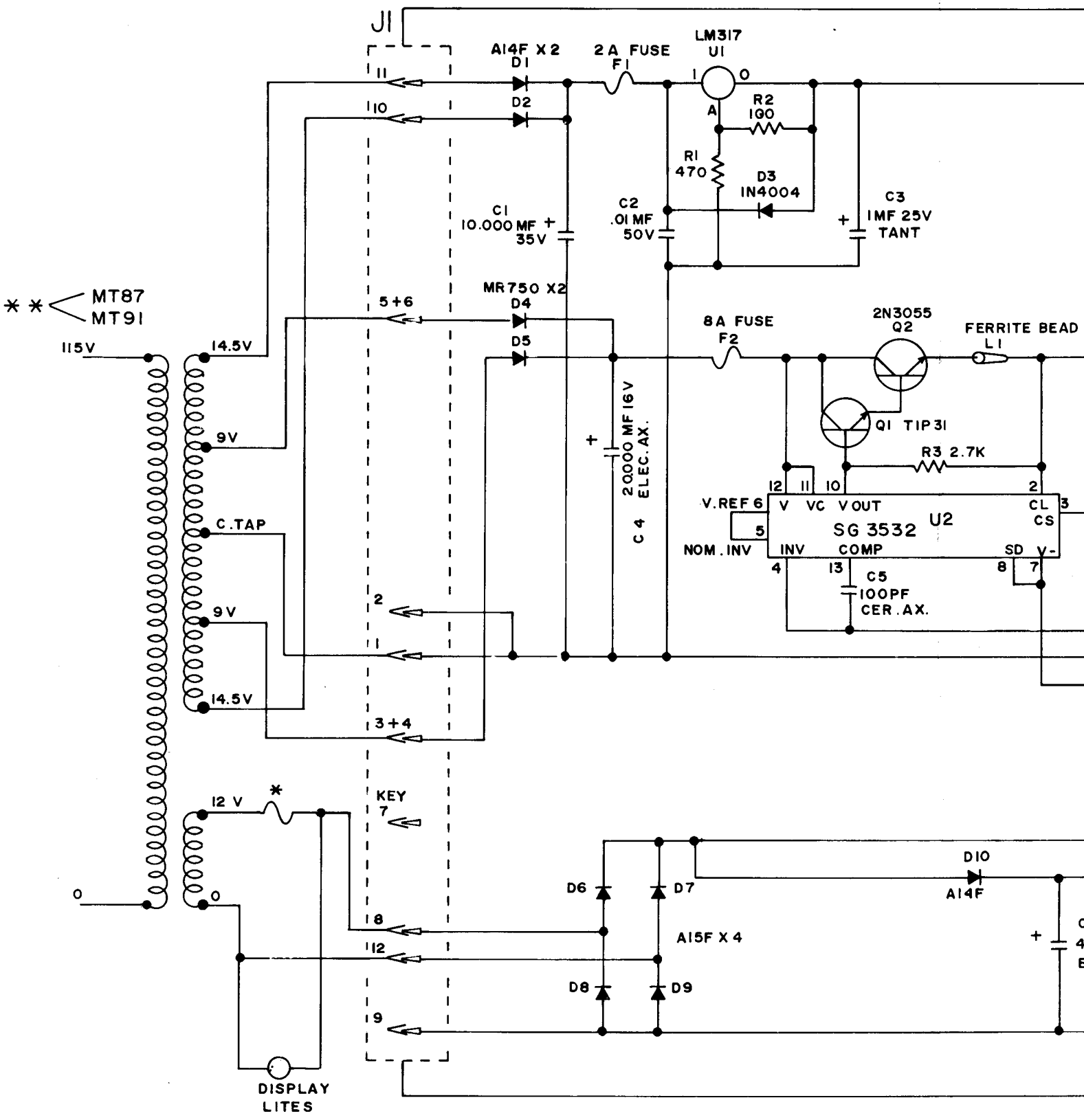

NOTES:

* 2AMP FUSE W/O DISPLAY LITES

** MT87 FOR UR.
MT91 FOR C.T.

DO NOT SCALE D	
DIM. TOLERANCES UNLESS SPECIFIED	DRN
CONCENTRICITY T I R .003	CKD
FRACTIONAL 1/64	
DECIMAL .005	
HOLE DIA + .002 .000	DATE

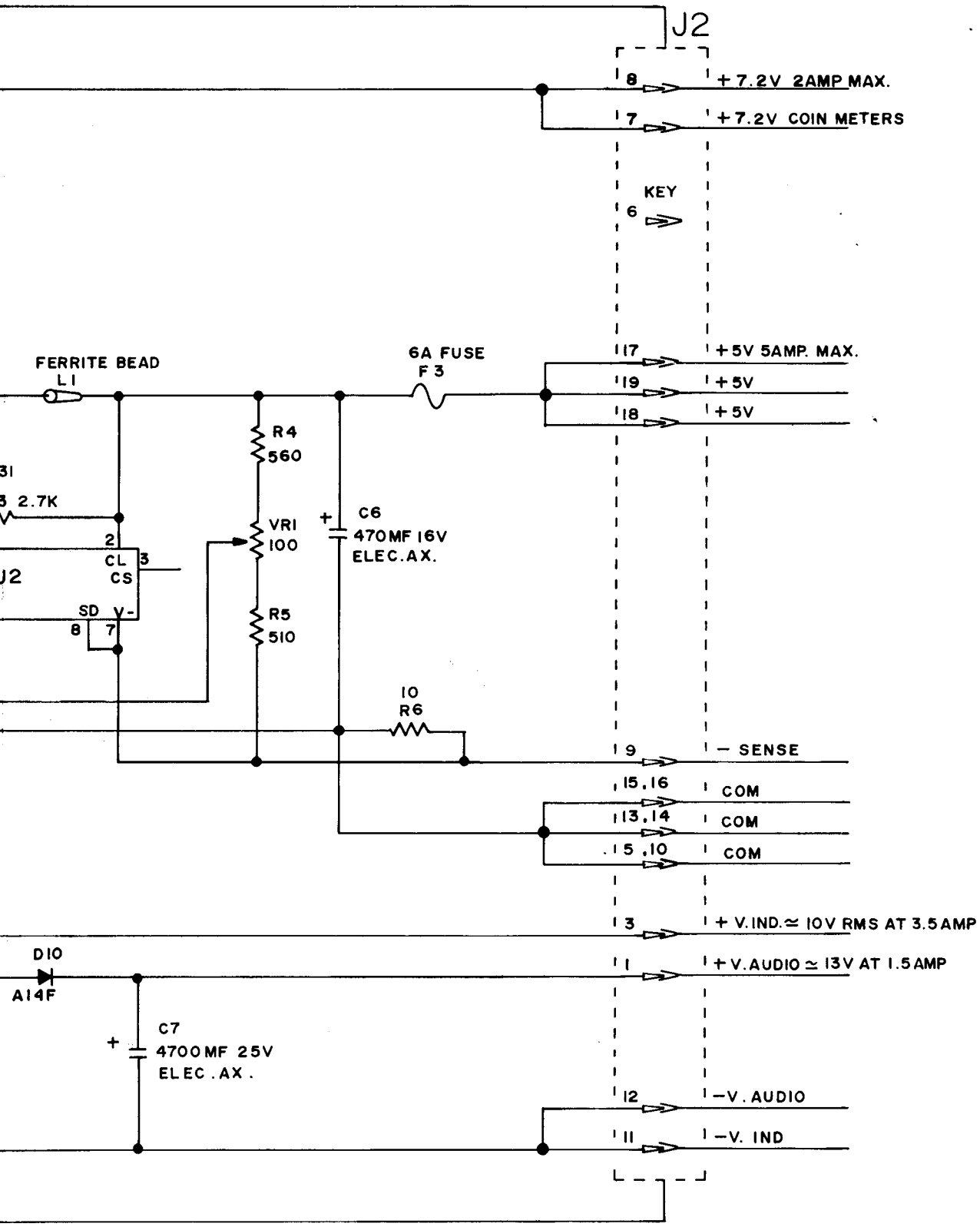

				REVISIONS	
DO NOT SCALE DWG	HEAT TREAT	SCALE FULL	USED ON RALLY-X	MIDWAY MFG. CO.	
DIM. TOLERANCES UNLESS SPECIFIED	DRN M.M.	MAT'L	NO. REQ'D 1 PER	FRANKLIN PK. ILL	
CONCENTRICITY T I R .003 FRACTIONAL 1/64 DECIMAL .005 HOLE DIA + .002 .000	CKD DATE 2-10-82	FINISH	SCHEMATIC POWER SUPPLY A084-90414-C935	ART NO. M051-00935-C025	

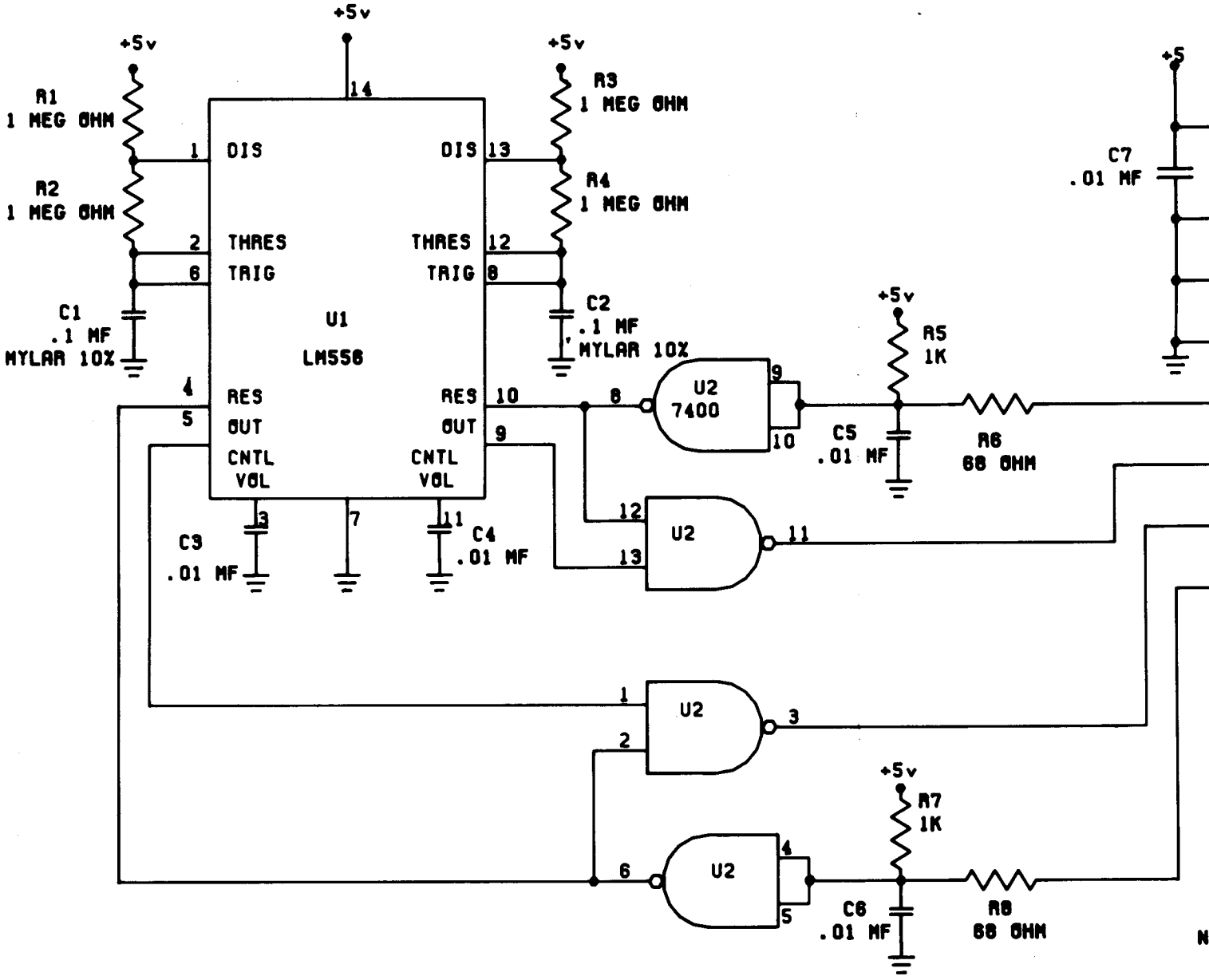

M051-00114-A002

CKD. V.S.	DO NOT SCALE DWG.		REVISIONS
DRN. TJK	DATE 9/30/81	USED ON GALAGA	MIDWAY MFG. CO. FRANKLIN PK. ILL.
heat treat	scale FULL	NO. REQ'D 1 PER	
mat'l.	RAPID FIRE P.C.		PART NO. A082-91410-A000
finish			

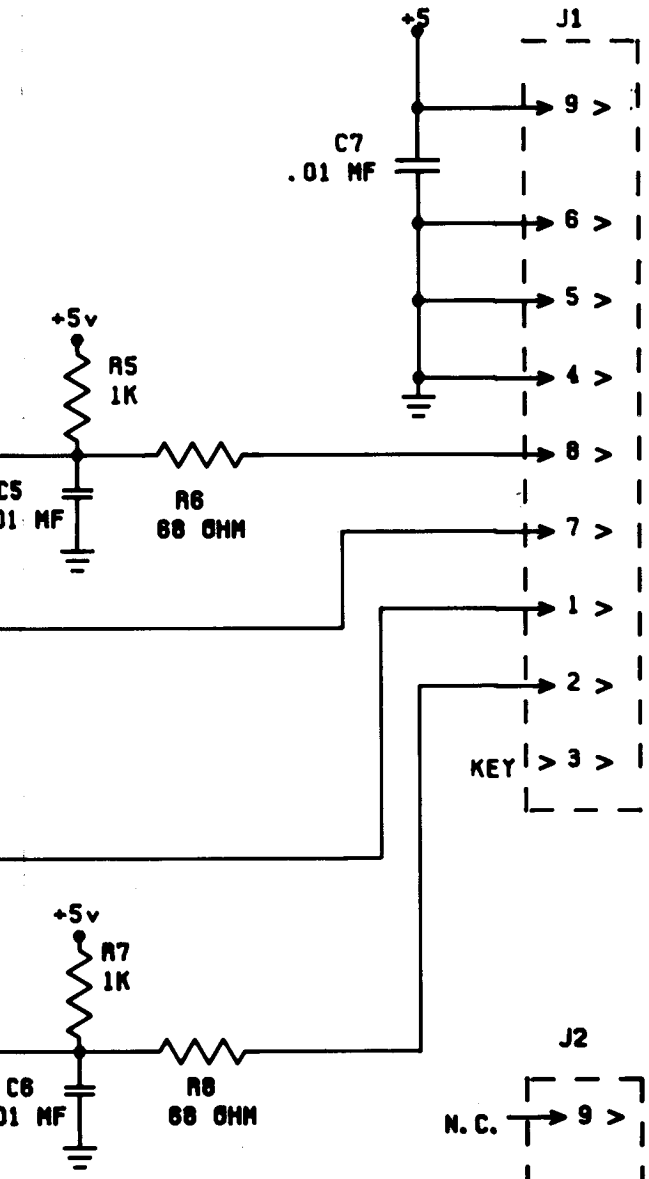

NOTE: USE J1 FOR RAPID FIRE OPTION

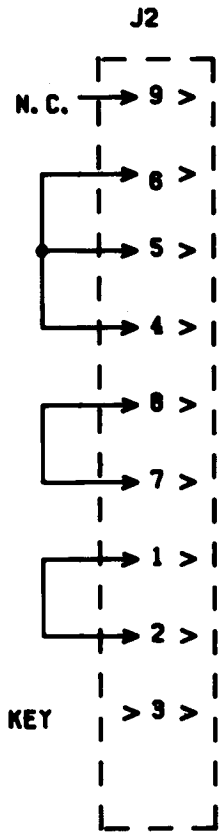

NOTE: USE J2 TO BYPASS RAPID FIRE OPTION

REVISIONS
FG. CO.
KLIN PK. ILL.
2-81410-A000

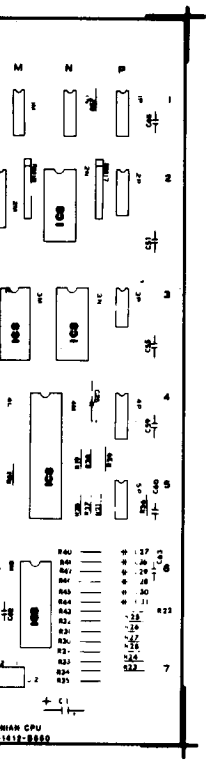

CROSS REFERENCE LIST

DESCRIPTION	QUAN	DESIGNATION	PART NO.
100 PF CER.	2	C48,CX2	0580-00800-0900
.001 MF POLY.	2	C30,C31	0580-00800-1100
.0082 MF CER.	1	C45	0580-00800-0600
.01 MF "	17	C2-C17, C19	0580-00800-0700
.01 MF POLY.	4	C26-C29	0580-00800-1000
.1 MF CER.	19	C18,C46-C63	0580-00800-0800
.18 MF TANT.	2	C23,C24	0580-00800-1200
10 MF ELEC.	2	C25,C44	0580-00800-1700
22 MF "	1	C20	0580-00800-1600
100 MF "	1	C22	0580-00800-1800
220 MF "	1	C21	0580-00800-1400
470 MF "	1	C1	0580-00800-1300
100 OHM 1/4w 5% CRBN	1	R5	0068-11083-1XXX
330 " " " "	2	R1,R2	0068-14483-XXX
470 " " " "	3	R46,R47,R48	0068-19683-1XXX
1 K " " " "	13	R6,R10,R52-R54,R56-R58, RX1	0068-17983-1XXX
2.2K " " " "	2	R17,R39	0068-19683-1XXX
3.3K " " " "	2	R20,R36	0068-20383-1XXX
4.7K " " " "	5	R18,R25,R29,R43,R65	0068-21183-1XXX
10K " " " "	11	R7,R8,R9,R19,R26,R30,R34, R37,R44,R51,R55	0068-22783-1XXX
22K " " " "	6	R11,R23,R27,R31,R41,R45	0068-24383-1XXX
33K " " " "	2	R21,R24	0068-25183-1XXX
47K " " " "	5	R12,R28,R32,R33,R40	0068-25983-1XXX
100K " " " "	2	R13,R14	0068-27583-1XXX
150 K " " " "	2	R35,R42	0068-28383-1XXX
220K " " " "	1	R22	0068-29183-1XXX
470K " " " "	1	R60	0068-30783-1XXX
220 OHM 9 PIN	1	RM16	0580-00804-1800
1K " 5 PIN	5	RM1-RM5,RM6,RM9	0580-00804-1300
1K " 9 PIN	3	RM4, RM8, RM7	0580-00804-1500
2.2K " 9 PIN	4	RM10-RM13	0580-00804-1900
2.2K " 9 PIN	4	RM17-RM20	0580-00804-1600
4.7K " 9 PIN	2	RM21, RM22	0580-00804-1700
1K POT	1	VR1	0508-00804-1300
IN9148	1	D1	0580-00801-0100
2N3391A	1	Q1	0580-00802-0200
2N4403	1	Q2	0580-00802-0100
TIP110	1	Q3	0580-00802-0300
08XX CUSTOM IC	1	ICSL	0068-006CX-XAPX
07XX " "	1	" 4D	0068-006CX-XAPX
09XX " "	3	" 2E,2H,2J	0068-007CX-XAPX
50XX " "	1	" 6L	0068-012CX-XAPX
51XX " "	1	" 4H	0068-008CX-XAPX
54XX " "	1	" 6M	0068-009CX-XAPX
74LS32	2	" 3P,4C	0580-00803-0500
7489	2	" 2A,2B	0580-00803-0300
74107	1	" 6B	0580-00803-7200
74LS107	1	" 1A	0580-00803-0600
7412 8	1	" 6B	0580-00803-0400
74LS138	2	" 1P,2P	0580-00803-0700
745139	1	" 4P	0580-00803-0800
74LS139	2	" 4B,6C	0580-00803-0900
74LS151	2	" 4K,6K	0580-00803-1000
74LS157	1	" 2C	0580-00803-1100
74LS158	1	" 2D	0580-00803-1200
74LS174	1	" 1C	0580-00803-1300
74LS245	1	" 2M	0580-00803-1400
74LS299	1	" 5C	0580-00803-1500
74LS273	1	" 3B	0580-00803-1600
74LS283	1	" 1B	0580-00803-1700
74LS367	6	" 1E,1F,1H,1J,1K,1L,1M,1N	0580-00803-1800
74LS368	1	" 6A	0580-00803-1900
74LS393	1	" 6A	0580-00803-2000
LM324	1	" 3P	0580-00803-0200
MS370	1	" 7C	0068-18811-XXXX
40697888	1	" 5A	0508-00803-2300

DESCRIPTION	QUAN	DESIGNATION	PART NO.
PROM 82-1	1	IC 1D	0580-00803-3100
" 82-2	1	" 6C	0580-00803-3200
EPROM 82-A	1	" 2N	0580-00803-2300
" 82-B	1	" 2M	0580-00803-2400
" 82-C	1	" 3L	0580-00803-2500
" 82-D	1	" 3K	0580-00803-2600
" 82-E	1	" 3J	0580-00803-2700
" 82-F	1	" 3H	0580-00803-2800
" 82-G	1	" 3E	0580-00803-2900
STATIC RAM 2KX8	1	" 2H	0580-00803-3000
Z-80A	3	" 4E,4J,4M	0580-00803-2200
14 PIN SOCKET	1	ICS 8B	0580-00804-0600
16 " "	3	" 1B,6A,8C	0580-00804-0700
24 " "	6	" 2N,3E,3H,3J,3K,3L,3M,3N	0580-00804-0400
28 " "	7	" 2E,2K,2J,2L,4D,6L,6M	0580-00804-0300
40 " "	3	" 4E,4J,4M	0580-00804-0500
42 " "	1	" 4H	0580-00804-0700
18.432 MHZ CRYSTAL	1	XTAL1	0580-00804-1100
ARC-8 PB SWITCH	1	SW1	0580-00804-1800
8 POS. DIP SWITCH	2	DIPSW1,DIPSW2	0580-00804-1400
CONN. R.A. HEADER. 50PIN	1	J1	0580-00804-0900
CONN. PCB HEADER. 5 PIN	1	J2	0017-00021-0443
MOUNTING HARDWARE			
4-40 HEX NUT	2	MISC7C	0017-00103-0002
4-40X6 SLT PAN M.S.	2	"	0017-00101-0510
WSH 4 .125-250-032 FLT. ST	2	"	0017-00104-0015
WSH 4 .120-250-018 EXT. ST.	2	"	0017-00104-0071
BOSCONIAN CPU PC.	1		A080-91412-8550

PROJECT ENG: J. SZERSZEN		USED ON BOSCONIAN	MIDWAY MFG. CO. FRANKLIN PK ILL
DO NOT SCALE DWG	HEAT TREAT	SCALE FULL	NO REQ'D 1 PER.
DIM TOLERANCES UNLESS SPECIFIED	MATL	BOSCONIAN CPU BD. A084-91412-8550 ASS'Y DRWNG.	PART NO MOS1-00550-8010
	FINISH		

REVISIONS

DESIGNATION LIST

DESIGNATION	DESCRIPTION
C1	470 MF ELEC.
C2—C17	.01 MF CER.
C18	.1 MF "
C19	.01 MF "
C20	22 MF ELEC.
C21	220 MF "
C22	100 MF "
C23,C24	.15 MF TANT.
C25	10 MF ELEC.
C26—C29	.01 MF POLY.
C30,C31	.001 MF "
C32—C42	NOT USED
C43	.0082 MF CER.
C44	10 MF ELEC.
C45	100 PF CER.
C46—C68	.1 MF "
CX1	NOT USED
CX2	100 PF CER.
R1,R2	220 OHM 1/4w 5% CRBN.
R3,R4	NOT USED
R5	100 OHM 1/4w 5% CRBN.
R6	1K " " " "
R7,R8	10K " " " "
R9	NOT USED
R10	10K OHM 1/4w 5% CRBN.
R11	22K " " " "
R12	47K " " " "
R13	100K " " " "
R14	NOT USED
R15	470 OHM 1/4w 5% CRBN.
R16	1K " " " "
R17	2.2K " " " "
R18	4.7K " " " "
R19	10K " " " "
R20	3.3K " " " "
R21	33 K " " " "
R22	220K " " " "
R23	22K " " " "
R24	100K " " " "
R25	4.7K " " " "
R26	10 K " " " "
R27	22K " " " "
R28	47K " " " "
R29	4.7K " " " "
R30	10 K " " " "
R31	22K " " " "
R32,R33	47K " " " "
R34	10 K " " " "
R35	150K " " " "
R36	33 K " " " "
R37	10 K " " " "
R38	3.3K " " " "
R39	2.2K " " " "
R40	470K " " " "
R41	22 K " " " "
R42	150K " " " "
R43	4.7K " " " "
R44	10 K " " " "
R45	22K " " " "
R46	47K " " " "
R47,R48	470 " " " "
R49,R50	NOT USED
R51	10K OHM 1/4w 5% CRBN.
R52—R54	1K " " " "
R55	10K " " " "
R56—R62	1K " " " "
R63,R64	NOT USED
R65	4.7 K OHM 1/4w 5% CRBN.
RX1	1K " " " "
RN1—RN3	1K OHM 8 PIN SIP.
RN4	1K " 9 PIN "
RN5	1K " 8 PIN "
RN6,RN7	1K " 9 PIN "
RN8	NOT USED
RN9	1K OHM 8 PIN SIP.
RN10—RN15	8.2K " 9 PIN "
RN16,RN18	NOT USED
RN19	220 OHM 8 PIN SIP.
RN17—RN20	8.2K " 9 PIN "
RN21,RN22	4.7K " " " "
VR1	1K POT

DESIGNATION	DESCRIPTION
D1	IN914B
Q1	2N5391A
Q2	2N4403
Q3,Q4	NOT USED
Q5	TIP 110
IC 1A	74LS107
" 1B	74LS393
" 1C	74LS174
" 1D	PROM 89-1
" 1E,1F,1H,1J,1K,1L,1M,1N	74LS367
" 1P	74LS138
" 2A,2B	7486
" 2C	74LS157
" 2D	74LS86
" 2E,2H,2J	06XX CUSTOM IC
" 2L	" "
" 2M	74LS245
" 2N	STATIC RAM 8K X8
" 2P	74LS86
" 3A	4066 CMOS
" 3B	74LS273
" 3C	74LS266
" 3D	NOT USED
" 3E	EPROM 89-6
" 3H	" 89-F
" 3J	" 89-E
" 3K	" 89-D
" 3L	" 89-C
" 3M	" 89-B
" 3N	" 89-A
" 3P	74LS32
" 4B	74LS139
" 4C	74LS32
" 4D	07XX CUSTOM IC
" 4E	Z-80A
" 4H	01XX CUSTOM IC
" 4J	Z-80A
" 4K	74LS161
" 4L	NOT USED
" 4M	Z-80A
" 4P	74S139
" 5A	74LS366
" 5B	7407
" 5C	PROM 89-2
" 5K	74LS151
" 5P	LM324
" 6A	74LS393
" 6B	74126
" 6C	74LS259
" 6L	60XX CUSTOM IC
" 6M	64XX " "
" 7C	MB3730
ICS 1D	16 PIN SOCKET
" 2E,2N,2J,2L	20 PIN "
" 2M,2E,2H,2J,2K,2L,2M,2N	24 PIN "
" 4D	28 PIN "
" 4E	40 PIN "
" 4H	42 PIN "
" 4J,4M	40 PIN "
" 5A	16 PIN "
" 5B	14 PIN "
" 5C	16 PIN "
" 6L,6M	28 PIN "
XTAL 1	18.432 MHZ CRYSTAL
SW 1	ANC-8 PB SWITCH
DIP SW 6J,6K	8 POS. DIP SWITCH
J1	CONN. R.A.HEADER 50 PIN
J2	CONN. RC.B. HEADER 3 PIN
M90C7C	MOUNTING HARDWARE — (2) 4-40 HEX NUT — (2) 4-40 X 5 SLT PAN M.S. — (2) WSH 4 .125-250-032 FLT ST — (2) WSH 4 .150-250-016 EXT. ST
P.C.B.	BOSCONIAN CPU BD.

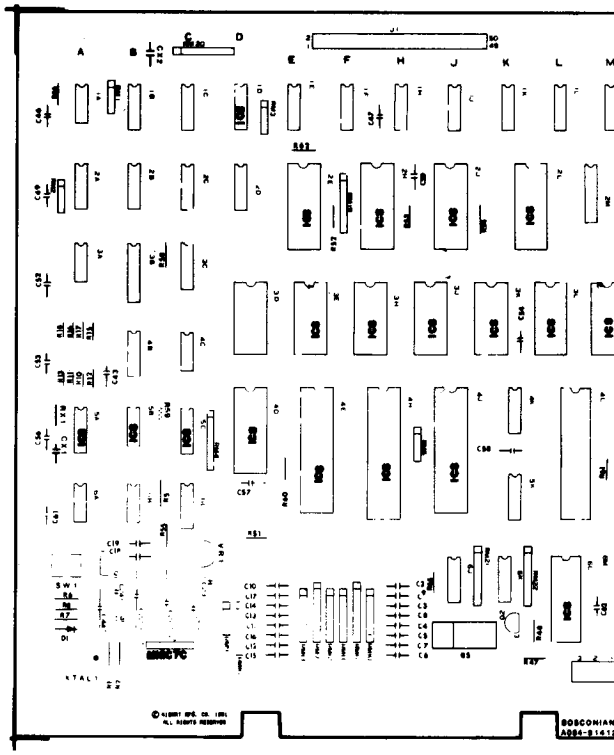

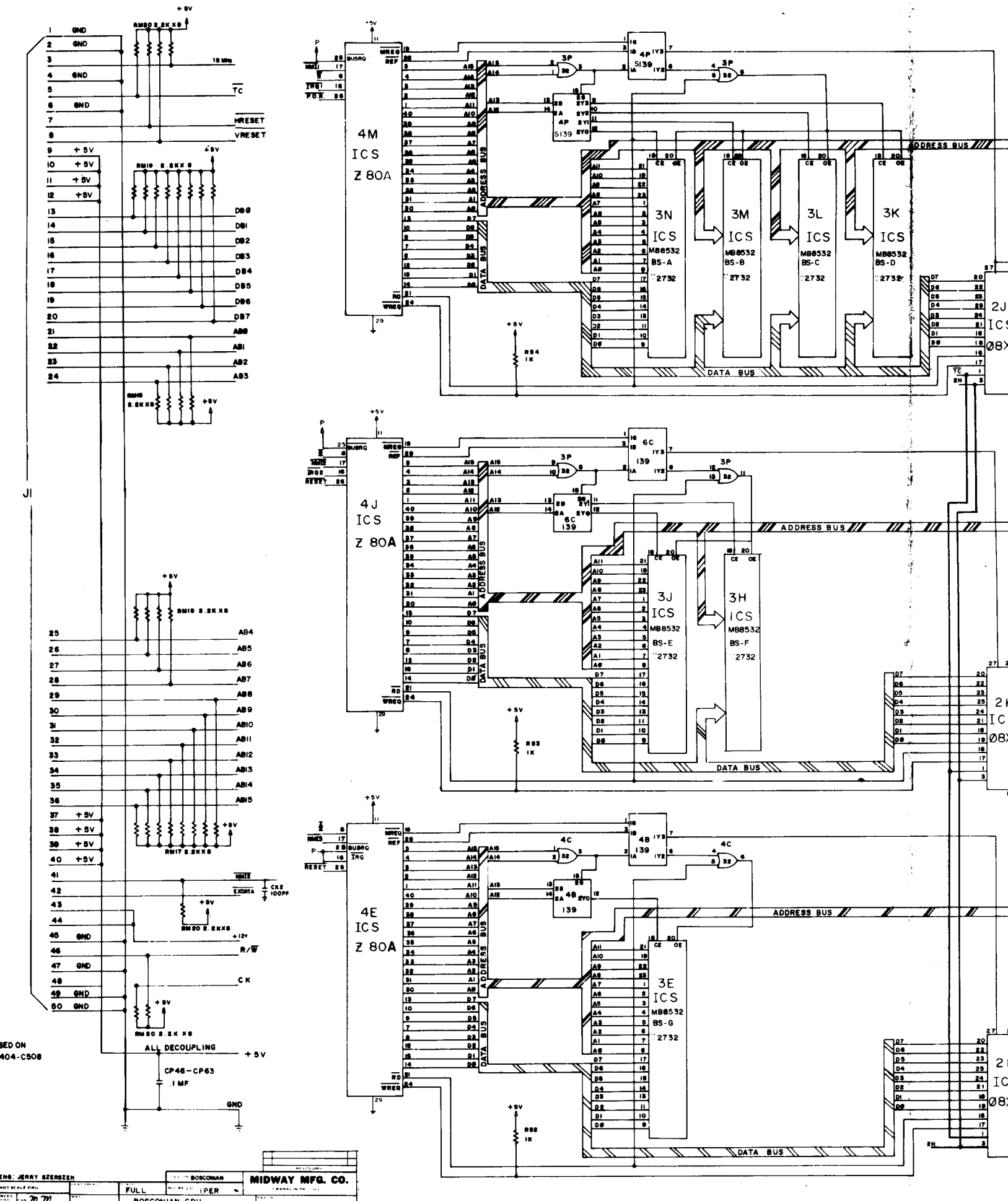

ENG: JERRY SZERSZEN	BOSCONIAN	MIDWAY MFG. CO.	
	FULL		
2/9/82	BOSCONIAN CPU A084-91412-B550 SCHEMATIC	M051 00550 B011	

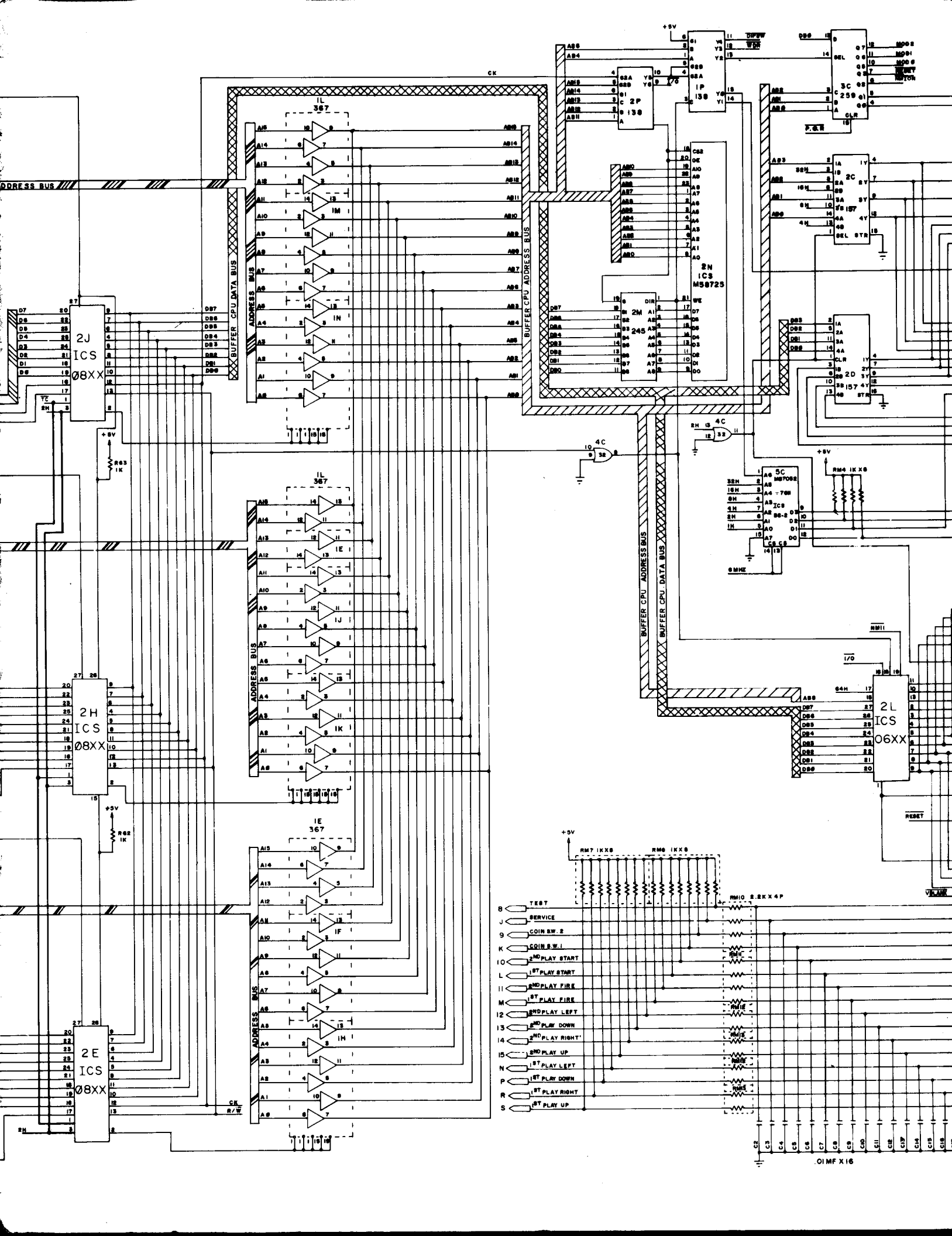

ADDRESS BUS
BUFFER CPU DATA BUS
ADDRESS BUS
BUFFER CPU ADDRESS BUS
BUFFER CPU ADDRESS BUS
BUFFER CPU DATA BUS
1L 367
1M
1N
1E 367
1E
1J
1K
1F
1H
2J ICS Ø8XX
2H ICS Ø8XX
2E ICS Ø8XX
2P 138
1P 138
2N ICS M58725
2M 245
3C 259
2C 157
2D 157
5C M57052
2L ICS 06XX
4C
+5V
R63 1K
R62 1K
RM4 1K X6
RM7 1K X6
RM8 1K X6
RM10 2.2K X 4P
TEST
SERVICE
COIN S.W. 2
COIN S.W. 1
2ND PLAY START
1ST PLAY START
2ND PLAY FIRE
1ST PLAY FIRE
2ND PLAY LEFT
2ND PLAY DOWN
2ND PLAY RIGHT
2ND PLAY UP
1ST PLAY LEFT
1ST PLAY DOWN
1ST PLAY RIGHT
1ST PLAY UP
.01MF X16

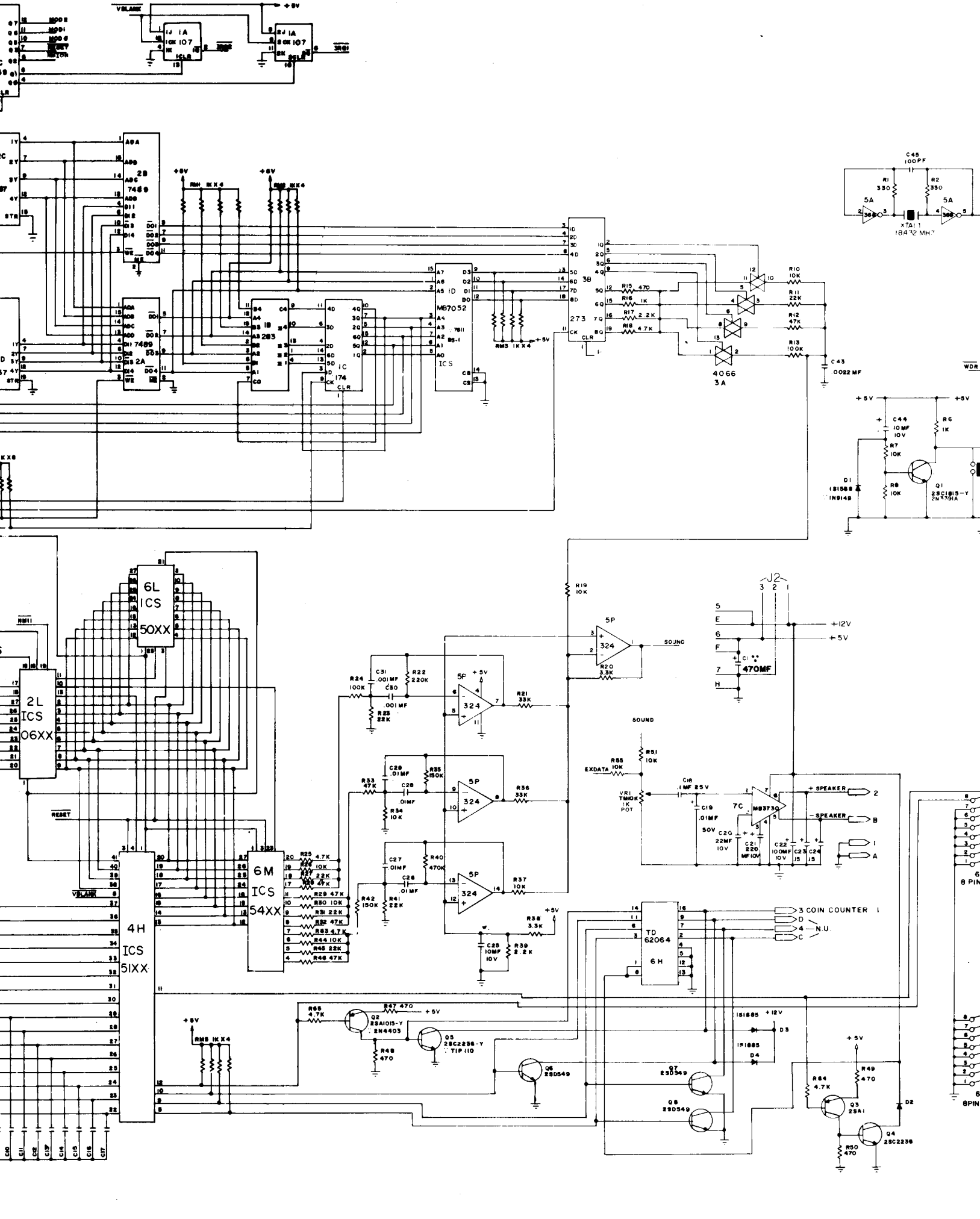

VBLANK
+5V
1A 107
2B 7489
7489 2A
1B 283
1C 174
MB7052
ICS
38 273
4066 3A
C45 100PF
R1 330
R2 330
5A
XTAL1 18432 MHZ
R10 10K
R11 22K
R12 47K
R13 100K
C43 .0022 MF
WDR
C44 10MF 10V
R6 1K
R7 10K
R8 10K
D1 1S1588 1N914B
Q1 2SC1815-Y 2N3391A
6L ICS 50XX
2L ICS 06XX
4H ICS 51XX
6M ICS 54XX
RESET
NMI1
R19 10K
5P 324
SOUND
R20 3.3K
J2
+12V
C1 470MF
R24 100K
C31 .001MF
R22 220K
C30 .001MF
R23 22K
R21 33K
R33 47K
C29 .01MF
R35 150K
C28 .01MF
R34 10K
R36 33K
C27 .01MF
R40 470K
C26 .01MF
R42 150K
R41 22K
R37 10K
R38 3.3K
C25 10MF 10V
R39 2.2K
R51 10K
R55 10K
EXDATA
VR1 TM10K 1K POT
C18 .1MF 25V
C19 .01MF 50V
7C MB3730
+ SPEAKER
- SPEAKER
C20 22MF 10V
C21 220 MF 10V
C22 100MF 10V
C23 .15
C24 .15
TD 62064 6H
3 COIN COUNTER 1
N.U.
R65 4.7K
R47 470
Q2 2SA1015-Y 2N4403
Q5 2SC2236-Y TIP110
R48 470
Q6 2SD549
Q7 2SD549
Q8 2SD549
1S1885
D3
D4
R64 4.7K
R49 470
Q3 2SA1
Q4 2SC2236
R50 470
D2
RM5 1K X4
RM3 1K X4
8 PIN

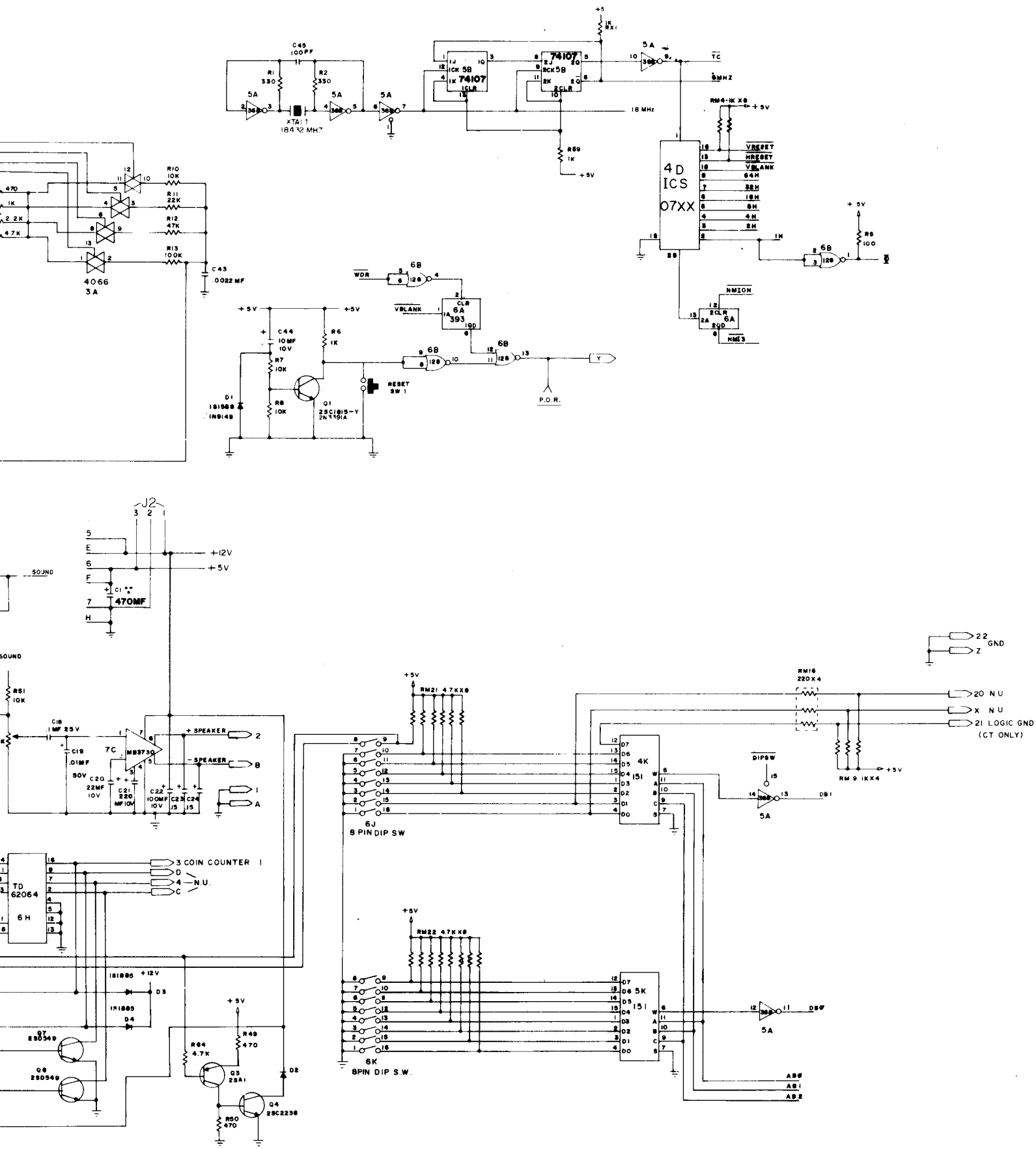

74107
5A
XTAL 1
18432 MHZ
18 MHz
4D
ICS
07XX
4066
3A
6B
6A
393
RESET
SW 1
P.O.R.
J2
+12V
+5V
SOUND
470MF
MB3730
+ SPEAKER
- SPEAKER
TD
62064
6H
3 COIN COUNTER
N.U.
6J
8 PIN DIP SW
6K
8PIN DIP S.W.
4K
151
5K
151
DIPSW
RM16
220X4
20 N.U
X N.U
21 LOGIC GND
(CT ONLY)
22 GND
Z

DESIGNATION LIST

DESIGNATION	DESCRIPTION
C 1	470 MF ELEC.
C 4	.022 MF POLY.
C 5, C6	.0047 MF "
C 7	.001 MF 100V 10% POLY
C8, C9	.001 MF 50V 10% CER.
C10—C45	.1 MF CER.
C46	220 PF MICA
C47	.001 MF 50V 10% CER.
C48	100 PF. CER.
R 1	220 OHM 1/4w 5% CRBN.
R 2	470 " " " "
R 3	220 " " " "
R 4	470 " " " "
R 5	1K " " " "
R 6	220 " " " "
R 7	470 " " " "
R 8	1K " " " "
R 11	10K " " " "
R12	22K " " " "
R13	47K " " " "
R14, R15	100K " " " "
R16	22K " " " "
R17	33K " " " "
R18	47K " " " "
R19	1K " " " "
R20	100 " " " "
R21—R31	1K " " " "
R32	330 " " " "
RM1—RM4	2.2 K OHM 9 PIN SIP.
RM5, RM6	1K " " " "
RM7	470 " " " "
RM8—RM10	1K " " " "
RM11	1K " 5 PIN "
Q1, Q2	2N3391A
IC 1B	74LS259
" 1C	74LS138
" 1D	74LS377
" 1E, 1H	PHAN. RAM 2K X 8
" 1J, 1K	74LS374
" 1M	06XX CUSTOM IC
" 1N	50XX " "
" 1R	07XX " "
**" 2B	RAM KIT B OPTION 1
" 2C	74LS163
" 2D	PROM BS-3
" 2E	7489
" 2F, 2H	74LS245
" 2J, 2K, 2L, 2M	74LS283
" 2N	74LS244
" 2P	74LS257
" 2R	PROM BS-4
**" 3A, 3B	RAM KIT B OPTION 2
" 3C, 3D, 3E, 3F	74LS163
" 3H	74LS283
" 3J	74LS20
" 3K	74LS283
" 3L, 3M	74LS86
" 3N	74LS20
" 3P	74LS86
" 3R	74LS138
" 4A	74LS174
" 4B	74LS365
" 4C	74LS273
*" 4D, 4E, 4F, 4H	RAM KIT A OPTION 2
*" 4J	" " " " 1
" 4K	03XX CUSTOM IC
" 4L	74LS377
" 4M	PROM BS-5
" 4N	03XX CUSTOM IC
" 4P	74LS368
" 5A	PHAN. PAL BS-8
" 5B	05XX CUSTOM IC
" 5D	EPROM BS-P
" 5E	" BS-N

DESIGNATION	DESCRIPTION
IC 5F, 5H	74LS174
" 5K	NOT USED
" 5L	EPROM BS-L
" 5M	" BS-K
" 5N	" BS-J
" 5R	52XX CUSTOM IC
" 6B	PROM BS-6
" 6C, 6D	74LS194
" 6E	74LS86
" 6F, 6H	74LS157
" 6J	74LS86
" 6K	74LS175
" 6L	74LS08
" 7C	74LS157
" 7D	74LS174
" 7E	74LS00
" 7F	74LS08
" 7H	PROM BS-7
" 7J	74LS175
ICS 1E	24 PIN SOCKET
" 1H	" " "
" 1M	28 PIN "
" 1N	" " "
" 1R	" " "
" 2D	16 PIN "
" 2R	" " "
" 4K	18 PIN "
" 4M	16 PIN "
" 4N	18 PIN "
" 5A	20 PIN "
" 5B	24 PIN "
" 5D	" " "
" 5E	" " "
" 5L	" " "
" 5M	" " "
" 5N	" " "
" 5R	42 PIN "
" 6B	16 PIN "
" 7H	" " "
PCMH1- PCMH4	DUAL LOCKING SPACERS
J1	50 PIN RT. ANGLE
J2	6 PIN MNL CONN.
CABLE ASSY	AS BELOW
P1, P2	PLUG-SOCKET CONNECTOR 50-PIN
CABLE	RIBBON CABLE-.33FT 50-CONNECTO 28 GA. STRND. RND. CONDUCTOR
A080-91413-B550	BOSCONIAN P.C.B.

DESCRIPTION

74LS174
NOT USED
EPROM BS-L
" BS-K
" BS-J
52XX CUSTOM IC
PROM BS-6
74LS194
74LS86
74LS157
74LS86
74LS175
74LS08
74LS157
74LS174
74LS00
74LS08
PROM BS-7
74LS175

24 PIN SOCKET
" " "
28 PIN "
" " "
" " "
16 PIN "
" " "
18 PIN "
16 PIN "
18 PIN "
20 PIN "
24 PIN "
" " "
" " "
" " "
" " "
" " "
42 PIN "
16 PIN "
" " "

DUALLOCKING SPACERS

50 PIN RT. ANGLE
6 PIN MNL CONN.
AS BELOW

PLUG-SOCKET CONNECTOR 50-PIN
RIBBON CABLE-.33FT 50-CONNECTOR
28 GA. STRND. RND. CONDUCTOR

BOSCONIAN P.C.B.

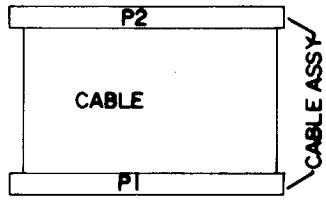

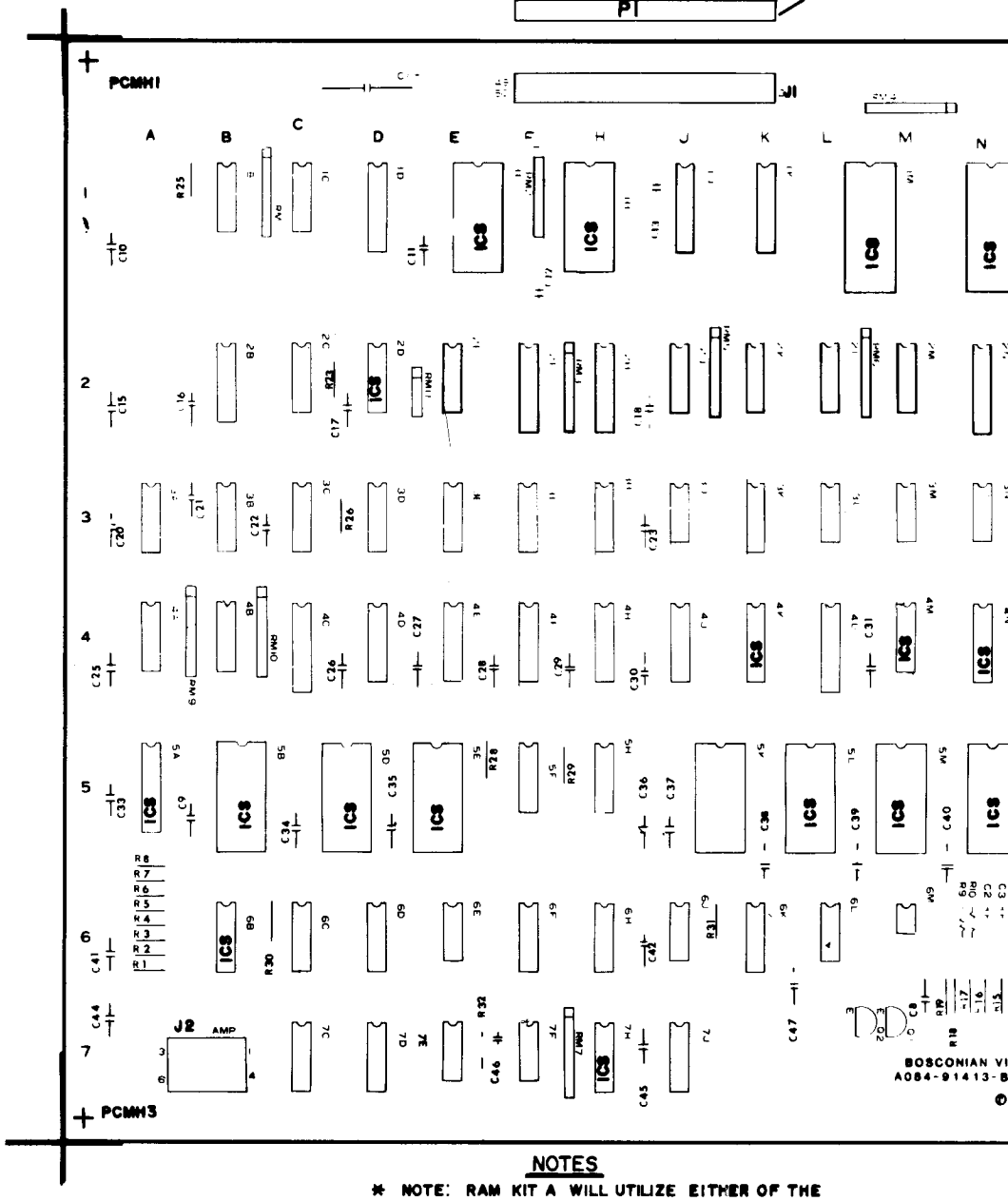

NOTES

* NOTE: RAM KIT A WILL UTILIZE EITHER OF THE FOLLOWING OPTIONS BUT NOT BOTH;
OPTION 1—(1) 2148 LOC. 4J
OR
OPTION2—(4)2147 LOC. 4D,4E,4F,4H

** NOTE: RAM KIT B WILL UTILIZE EITHER OF THE FOLLOWING OPTIONS BUT NOT BOTH;
OPTION1—(1) 2148 LOC. 2B
OR
OPTION2—(2) HM2511 LOC. 3A,3B

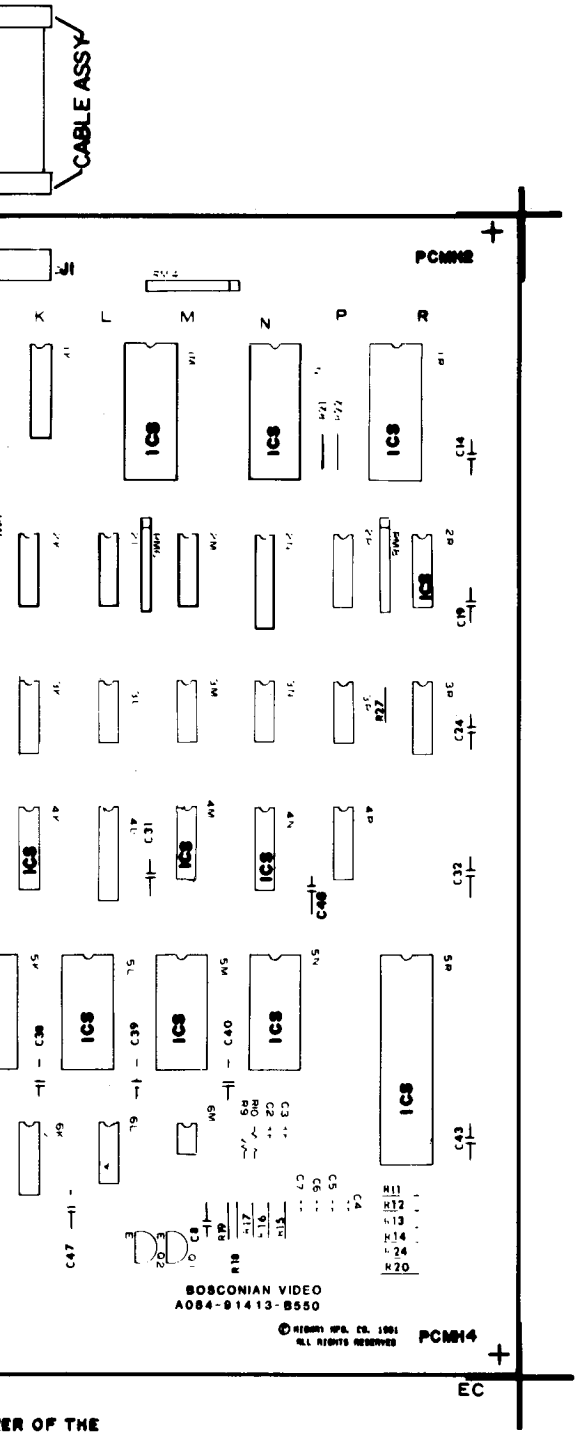

ER OF THE

ER OF THE

DESCRIPTION	QUAN.	DESIGNATION
100 PF CER	1	C48
220 PF MICA.	1	C46
.001 MF 100V 10% POLY.	1	C7
.001 MF 50V 10% CER.	3	C8,C9,C47
.0047 MF POLY.	2	C5,C6
.022 MF "	1	C4
.1 MF CER.	36	C10—C45
470 MF ELEC.	1	C1
100 OHM 1/4w 5% CRBN	1	R20
220 " " " "	3	R1,R3,R6
330 " " " "	1	R32
470 " " " "	3	R2,R4,R7
1K " " " "	14	R5,R8,R19,R21—R31
10K " " " "	1	R11
22K " " " "	2	R12,R16
33K " " " "	1	R17
47K " " " "	2	R13,R18
100K " " " "	2	R14,R15
470 OHM 9 PIN SIP.	1	RM7
1K " " " "	5	RM5,RM6,RM8—RM10
1K " 5PIN "	1	RM11
2.2K " 9PIN "	4	RM1—RM4
2N3391A	2	Q1,Q2
03XX CUSTOM IC	2	IC 4K,4N
05XX " "	1	" 5B
06XX " "	1	" 1M
07XX " "	1	" 1R
50XX " "	1	" 1N
52XX " "	1	" 5R
74LS00	1	IC 7E
74LS08	2	" 6L,7F
74LS20	2	" 3J,3N
74LS86	5	" 3L,3M,3P,6E,6J
7489	1	" 2E
74LS138	2	" 1C,3R
74LS157	3	" 6F,6H,7C
74LS163	5	" 2C,3C,3D,3E,3F
74LS174	4	" 4A,5F,5H,7D
74LS175	2	" 6K,7J
74LS194	2	" 6C,6D
74LS244	1	" 2N
74LS245	2	" 2F,2H
74LS257	1	" 2P
74LS259	1	" 1B
74LS273	1	" 4C
74LS283	6	" 2J,2K,2L,2M,3H,3K
74LS365	1	" 4B
74LS368	1	" 4P
74LS374	2	" 1J,1K
74LS377	2	" 1D,4L
PROM BS-3	1	IC 2D
" BS-4	1	" 2R
" BS-5	1	" 4M
" BS-6	1	" 6B
" BS-7	1	" 7H
PHAN. PAL BS-8	1	" 5A
EPROM BS-J	1	" 5N
" BS-K	1	" 5M
" BS-L	1	" 5L
" BS-N	1	" 5E
" BS-P	1	" 5D
PHAN RAM 2k X8	2	" 1E,1H

CROSS REFERENCE LIST

TION	PART NO.
	0550-00800-0900
	0550-00800-2000
	0550-00800-2100
47	0550-00800-2400
	0550-00800-2200
	0550-00800-2300
5	0550-00800-2500
	0508-00800-1500
	0062-11083-1XXX
8	0062-13383-1XXX
	0062-14483-1XXX
7	0062-15683-1XXX
19,R21—R31	0062-17983-1XXX
	0062-22783-1XXX
	0062-24383-1XXX
	0062-25183-1XXX
	0062-25983-1XXX
	0062-27583-1XXX
	0550-00804-2400
3,RM8—RM10	0550-00804-2100
	0550-00804-2000
14	0550-00804-2200
	0550-00802-0400
	0066-010CX-XAPX
	0066-004CX-XAPX
	0066-005CX-XAPX
	0066-006CX-XAPX
	0066-012CX-XAPX
	0066-013CX-XAPX
	0550-00803-3400
	0550-00803-3500
	0550-00803-3600
3P,6E,6J	0550-00803-3700
	0550-00803-3300
	0550-00803-3800
C	0550-00803-3900
3D,3E,3F	0550-00803-7100
H,7D	0550-00803-4000
	0550-00803-7000
	0550-00803-6900
	0550-00803-6800
	0550-00803-4100
	0550-00803-4200
	0550-00803-4300
	0550-00803-4400
L,2M,3H,3K	0550-00803-4500
	0550-00803-4600
	0550-00803-4700
	0550-00803-6700
	0550-00803-4800
	0550-00803-5500
	0550-00803-5600
	0550-00803-5700
	0550-00803-5800
	0550-00803-5900
	0550-00803-6600
	0550-00803-4900
	0550-00803-5000
	0550-00803-5100
	0550-00803-5200
	0550-00803-5300
	0550-00803-5400

DESCRIPTION	QUAN.	DESIGNATION	PART NO.
PHAN.RAM A OPTIONS	1	———	0550-00803-6000
* RAM KIT A OPTIONS 1	1	IC 4J	0550-00803-6200
* " " " " 2	4	" 4D,4E,4F,4H	0550-00803-6300
PHAN.RAM B OPTIONS	1	———	0550-00803-6100
** RAM KIT B OPTIONS 1	1	IC 2B	0550-00803-6400
** " " " " 2	2	" 3A,3B	0550-00803-6500
16 PIN SOCKET	5	ICS-2D,2R,4M,6B,7H	0508-00804-0700
18 PIN "	2	" 4K,4N	0508-00804-0600
20PIN "	1	" 5A	0550-00804-2300
24PIN "	8	" 1E,1H,5B,5D,5E,5L " 5M,5N	0508-00804-0500
28 PIN "	3	" 1M,1N,1R	0508-00804-0400
42 PIN "	1	" 5R	0508-00804-1900
6 PIN MNL CONN.	1	J2	0017-00021-0424
50 PIN RT. ANGLE CONN.	1	J1	0508-00804-0800
DUAL LOCKING SPACERS	4	PCMH1—PCMH4	0017-00042-0253
CABLE ASSY.	1	———	0508-00804-2200
50-PIN PLUG-SOCKET CONNECTOR	2	P1,P2	0508-00804-0900
RIBBON CABLE-.33FT	1	CABLE	0017-00033-0348
50-CONDUCTOR 28 GA. STRND AND CONDUCTOR			
BOSCONIAN P.C.B	1	———	A080-91413-B550

REVISION

PROJECT ENG. J. SEZERSZEN

USED ON BOSCONIAN

MIDWAY MF

FRANKLIN PK IL

DO NOT SCALE DWG

HEAT TREAT

SCALE FULL

NO REQ'D 1 PER

DIM TOLERANCES UNLESS SPECIFIED

MAT'L

FINISH

DWN M.M

CHK Y.S.

DATE 2/9/82

BOSCONIAN VIDEO
A084-91413-B550
ASS'Y DRWNG.

PART NO.

M05 1-0055

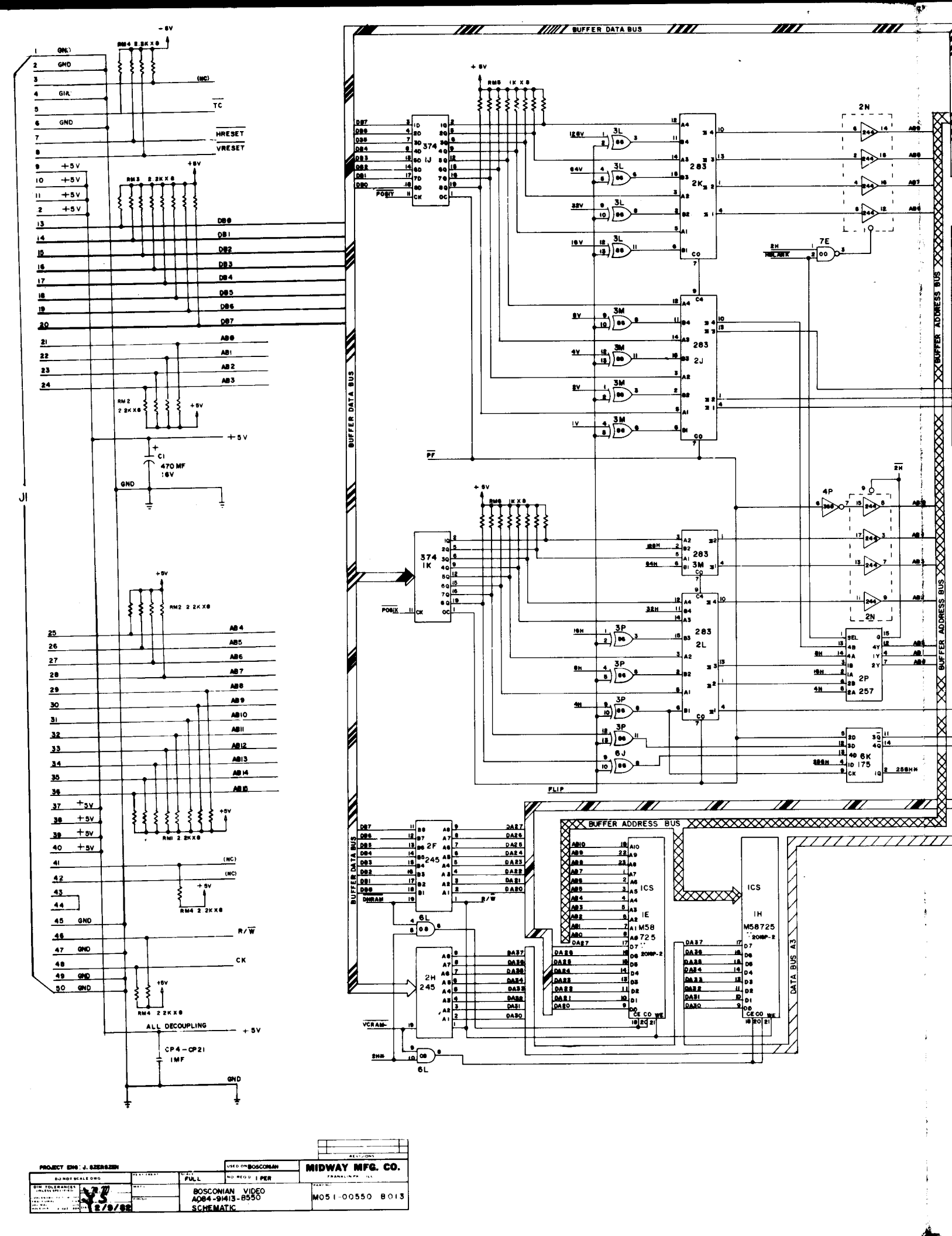

PROJECT ENG: J. SZERSZEN

DO NOT SCALE DWG

DIM TOLERANCES UNLESS SPECIFIED

USED ON BOSCONIAN

NO REQ'D 1 PER

SCALE FULL

MIDWAY MFG. CO.
FRANKLIN PK. ILL.

BOSCONIAN VIDEO
A084-91413-8550
SCHEMATIC

PART NO. M051-00550 B013

REVISIONS

2/9/82

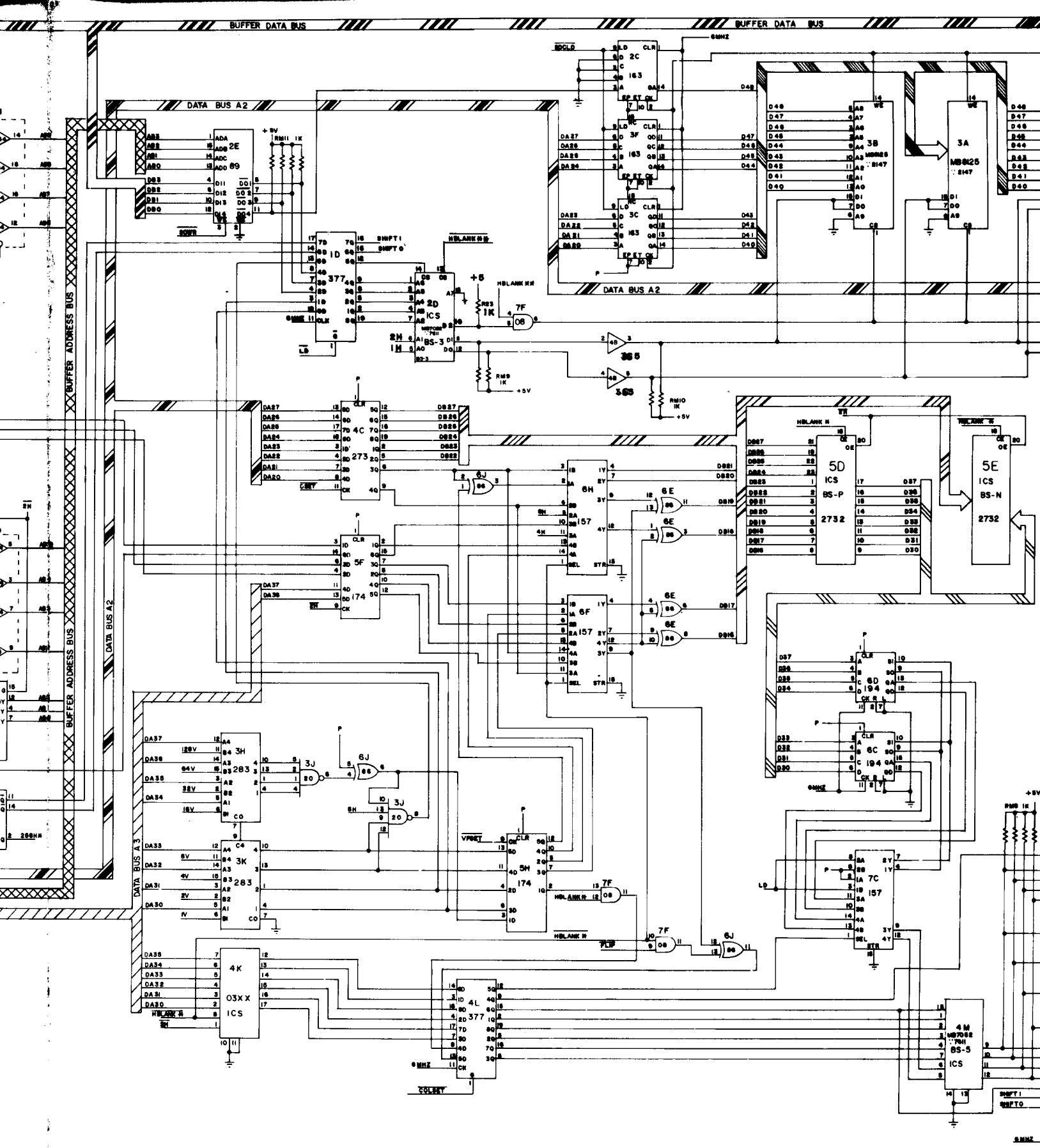
BUFFER DATA BUS
BUFFER DATA BUS
DATA BUS A2
DATA BUS A2
BUFFER ADDRESS BUS
BUFFER ADDRESS BUS
DATA BUS A2
DATA BUS A3
2E 89
1D 377
2D ICS BS-3
2C 163
3F 163
3C 163
3B MB8125 2147
3A MB8125 2147
4C 273
5F 174
6H 157
6F 157
5D ICS BS-P 2732
5E ICS BS-N 2732
6D 194
6C 194
3H 283
3K 283
5H 174
7C 157
4K 03XX ICS
4L 377
4M MB7052 7611 BS-5 ICS
+5V
6MHZ
COLSET
VFSET
HBLANK
FLIP
SHIFT 1
SHIFT 0

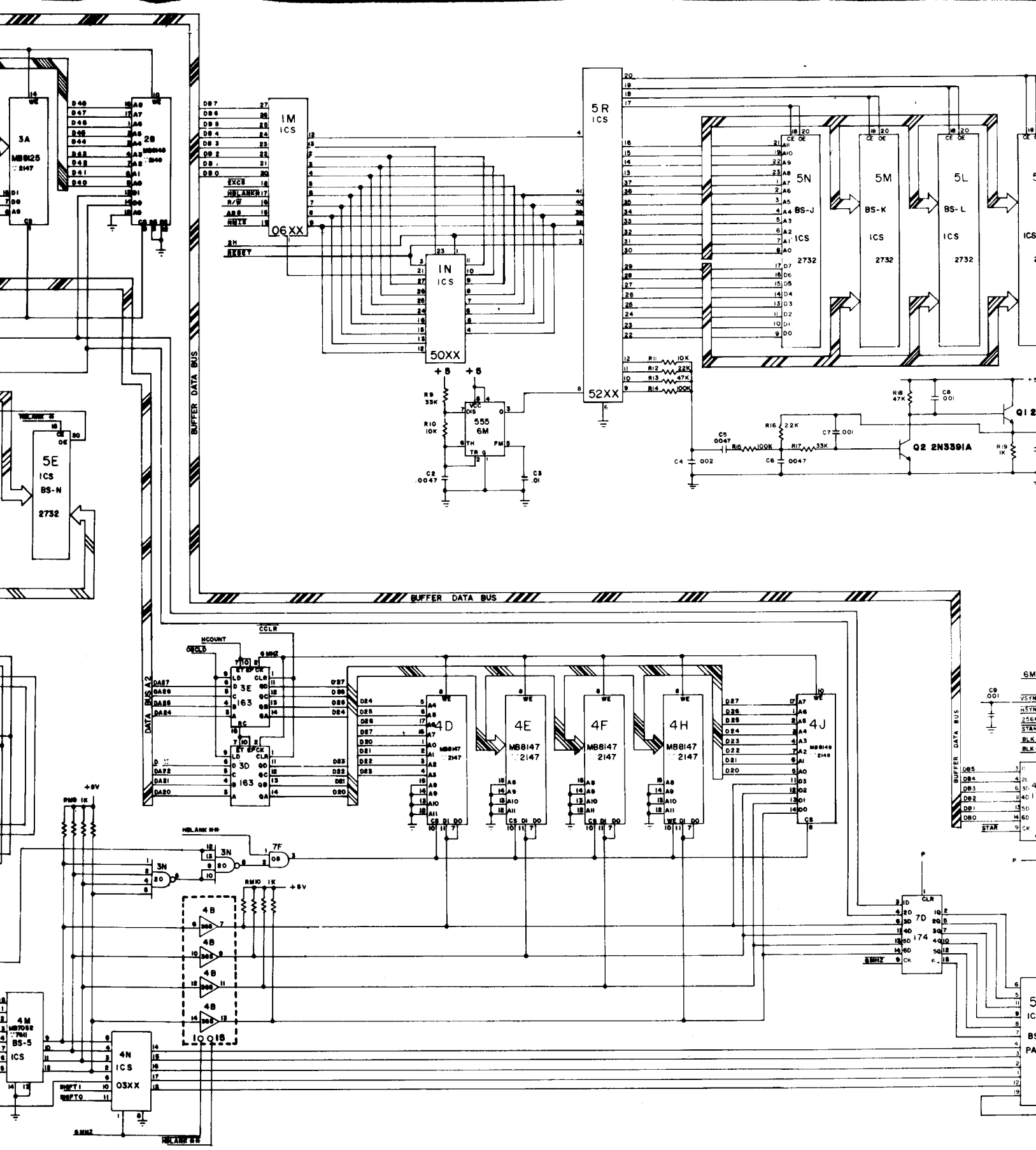

3A
MB8125
2147
2B
1M
ICS
06XX
1N
ICS
50XX
5R
ICS
52XX
5N
BS-J
ICS
2732
5M
BS-K
ICS
2732
5L
BS-L
ICS
2732
5E
ICS
BS-N
2732
555
6M
Q2 2N3391A
BUFFER DATA BUS
DATA BUS A2
3E
163
3D
163
4D
MB8147
2147
4E
MB8147
2147
4F
MB8147
2147
4H
MB8147
2147
4J
MB8148
2148
7F
3N
4B
7D
174
4M
BS-5
ICS
4N
ICS
03XX

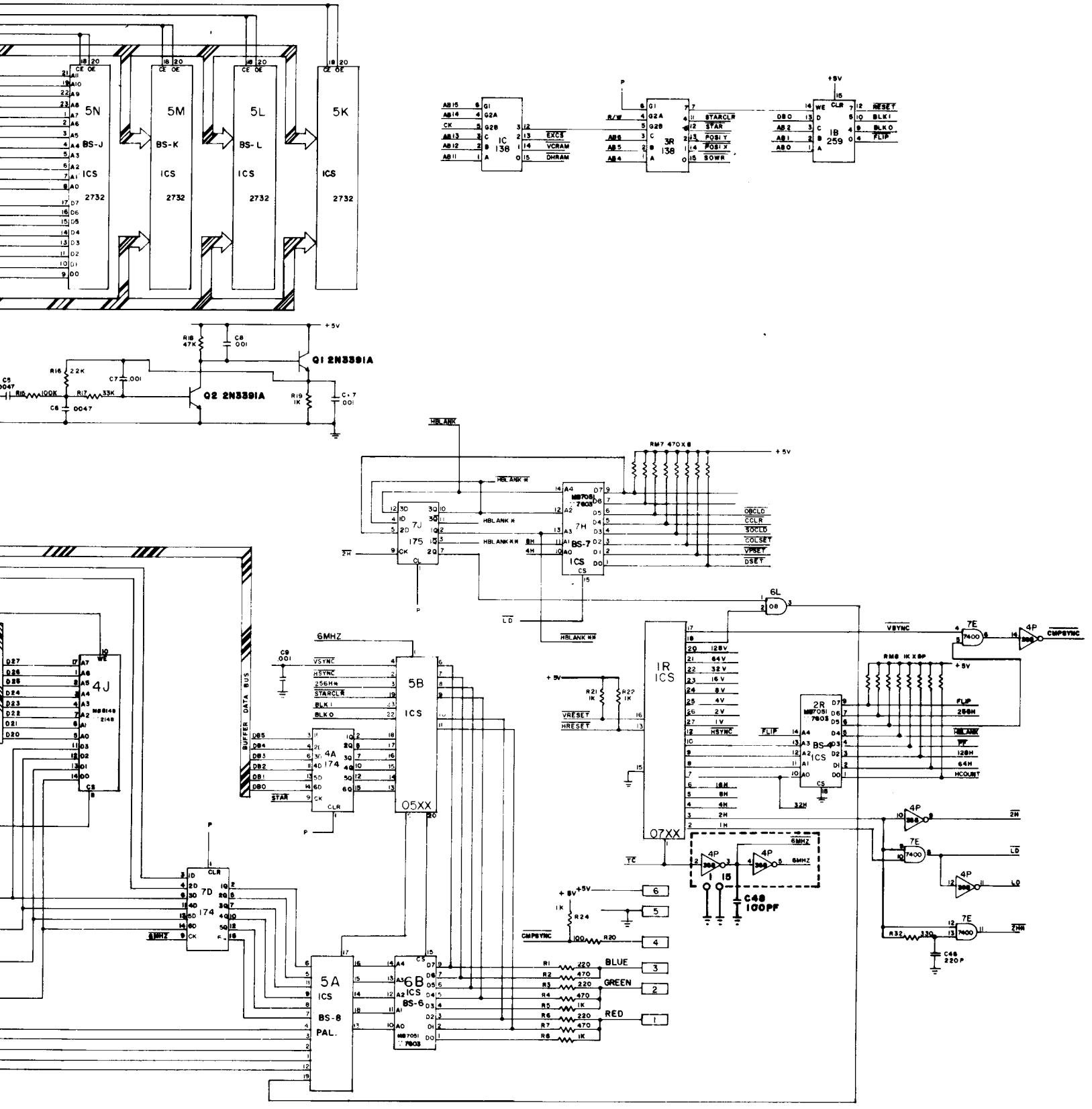
5N
BS-J
ICS
2732
5M
BS-K
ICS
2732
5L
BS-L
ICS
2732
5K
ICS
2732
IC
138
EXCS
VCRAM
DHRAM
3R
138
STARCLR
STAR
POSI Y
POSI X
SOWR
1B
259
RESET
BLK1
BLK0
FLIP
+5V
Q1 2N3391A
Q2 2N3391A
HBLANK
RM7 470X8
7J
175
7H
BS-7
ICS
OBCLD
CCLR
SOCLD
COLSET
VPSET
DSET
6L
08
VSYNC
7E
7400
4P
CMPSYNC
RM8 1K X 8P
FLIP
256H
HBLANK
PF
128H
64H
HCOUNT
2R
BS-4
ICS
1R
ICS
07XX
128V
64V
32V
16V
8V
4V
2V
1V
HSYNC
FLIP
16H
8H
4H
2H
1H
32H
6MHZ
C9
.001
VSYNC
HSYNC
256H
STARCLR
BLK1
BLK0
5B
ICS
05XX
4A
174
STAR
BUFFER DATA BUS
4J
7D
174
6MHZ
5A
ICS
BS-8
PAL.
6B
ICS
BS-6
BLUE
GREEN
RED
R1 220
R2 470
R3 220
R4 470
R5 1K
R6 220
R7 470
R8 1K
R24
R20
CMPSYNC
C48
100PF
C48
220P
R32
330
2H
LD
LO
ZHN

DESIGNATION	DESCRIPTION
C1	.1MF AXCER
C2-C5	47 PF AXCER
C6, C7	470PF AX CER
C8-C13	100 PF AX CER
C14-C36	.01 MF AX CER
L1-L4	CHOKE 10 JUH W.W. MILLER
L5-L8	CHOKE 10 JUH W.W.
L9-L12	CHOKE ENCAP 10 JUH
J1	P.C. EDGE CONN
J2, J3	3 PIN HEADER
J4, J5	6 PIN HEADER
J1 M.H.	2 EDGE CONN. KEY
	(2) 6-32 x 10 SLOT PAN SCREW
	(2) WSH 6 145-.250-.032
	(1) BRKT.-CONN. FIN.

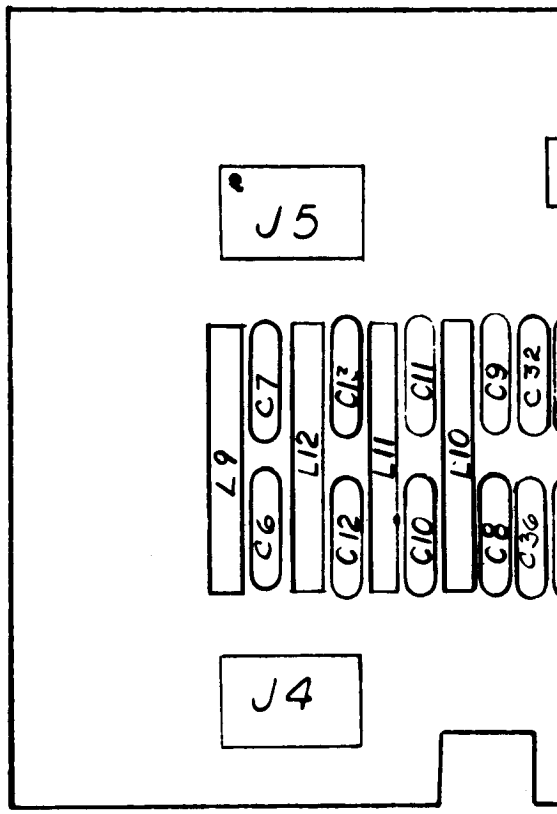

DESCRIPTION	QUANTITY	DESIGNATION	PHANTOM NUMBER
47 PF 50V AX CER	4	C2-C5	0550-00800-0500
100PF 50V AX CER	6	C8-C13.	0550-00800-0100
470PF 50V AX CER	2	C6, C7	0550-00800-0200
.01MF 50V AX CER	23	C14-C36	0550-00800-0300
.1MF 50V AXCER	1	C1	0550-00800-0400
10 JUH W.W. RF CHOKE MILLER	4	L1-L4	0067-021XX-XXAX
10 JUH W.W. RF CHOKE	4	L5-L8	0550-00804-0100
10 JUH ENCAP RF CHOKE	4	L9-L12	0550-00804-0200
PC EDGE CONN	1	J1	0017-00021-0418

PLEASE DESTROY ALL PRINTS DATED PRIOR TO 1-4-82

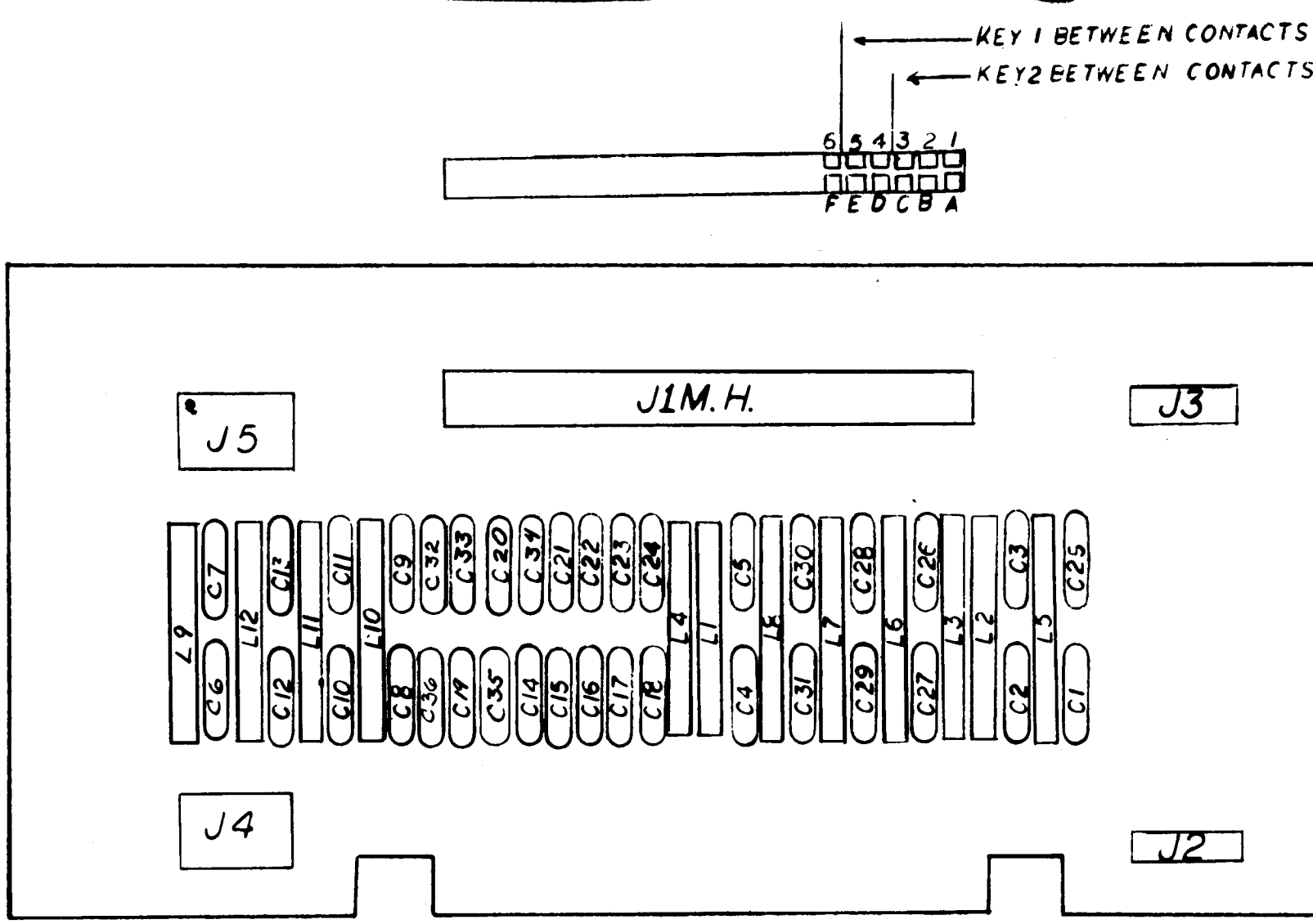

IBER	DESCRIPTION	QU
-0500	3 PIN HEADER AMP 350429-1	
-0100		
0200	6 PIN HEADER AMP 350431-1	
0300		
-0400	PC EDGECON KEY	
XXAX	6-32 x 10 SLOT PAN SCREW	
-0100	WSH 6 145-.250-.032	
0200	BRKT-CONN. FIN	
0418		

DATED

PROJECT ENGINEER L. EEKER

DIM. TOLERANCES UNLESS OTHERWISE SPEC.	FIRST USED ON	
CONCENTRICITY T.I.R. 002	DRN CKS	DATE 1-4-82
FRACTIONAL . . . . . ± .1/64	MECH CHK	MAT'L
DECIMAL . . . . . ± .005		
HOLE DIA. . . . . + .002 — .000	ELEC CHK	FINISH
ANGLE . . . . . ± 1/2°		
DO NOT SCALE DWG		

ETWEEN CONTACTS 5,E AND6,F
ETWEEN CONTACTS 3,C AND 4,D

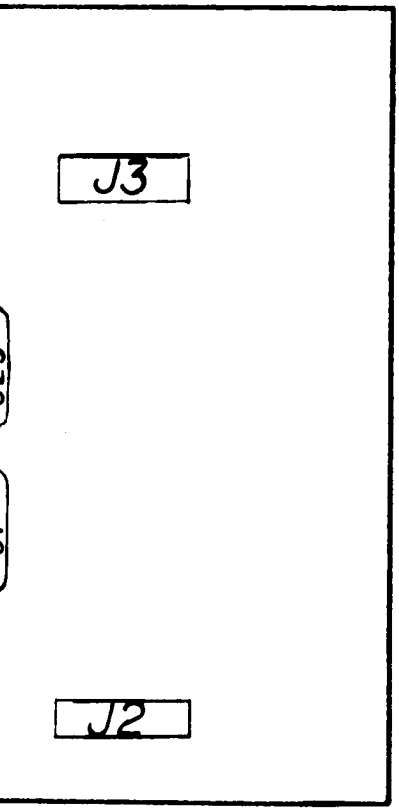

SCRIPTION	QUANTITY	DESIGNATION	PHANTOM NUMBER
PIN HEADER MP 350429-1	2	J2-J3	0017-00021-0443
PIN HEADER MP 350431-1	2	J4-J5	0017-0021-0424
EDGECON KEY	2	JIMH	C017-00021-0396
32x10 SLOT N SCREW	2	JIMH	0017-00101-0574
SH 6 3-.250-.032	2	JIMH	0017-00104-0002
RKT- NN.FIN	1	JIMH	0866-0016-00XF

KER

THIS DWG. IS CONFIDENTIAL & PROPERTY OF MIDWAY MFG. CO.

KS	DATE 1-4-82	SCALE FULL
K	MAT'L	
	FINISH	

MIDWAY MFG. CO.
FRANKLIN PK., IL. 60131 A BALLY CO.

BOSCONIAN FILTER P.C.
ASSY. DRWNG.
A084-9141 4-A550

REVISIONS

PART NO.
M-0-5-1 -0-0-5-5-0-A-0-1-4

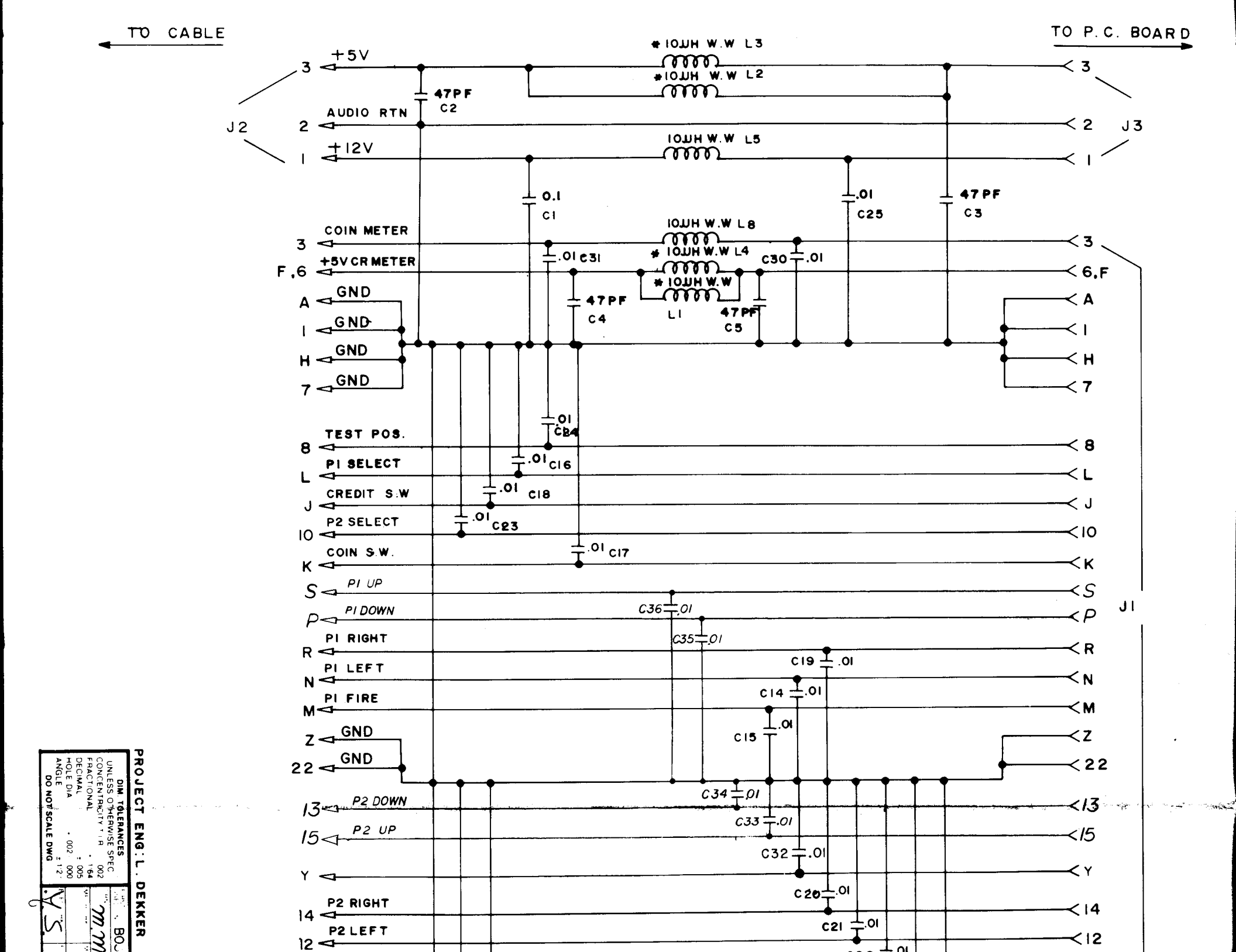

PROJECT ENG: L. DEKKER

DIM. TOLERANCES
UNLESS OTHERWISE SPEC
CONCENTRICITY T.I.R. .002
FRACTIONAL ± 1/64
DECIMAL .XX ± .005
.XXX ± .000
HOLE DIA ± .002
ANGLE ± 1/2°
DO NOT SCALE DWG

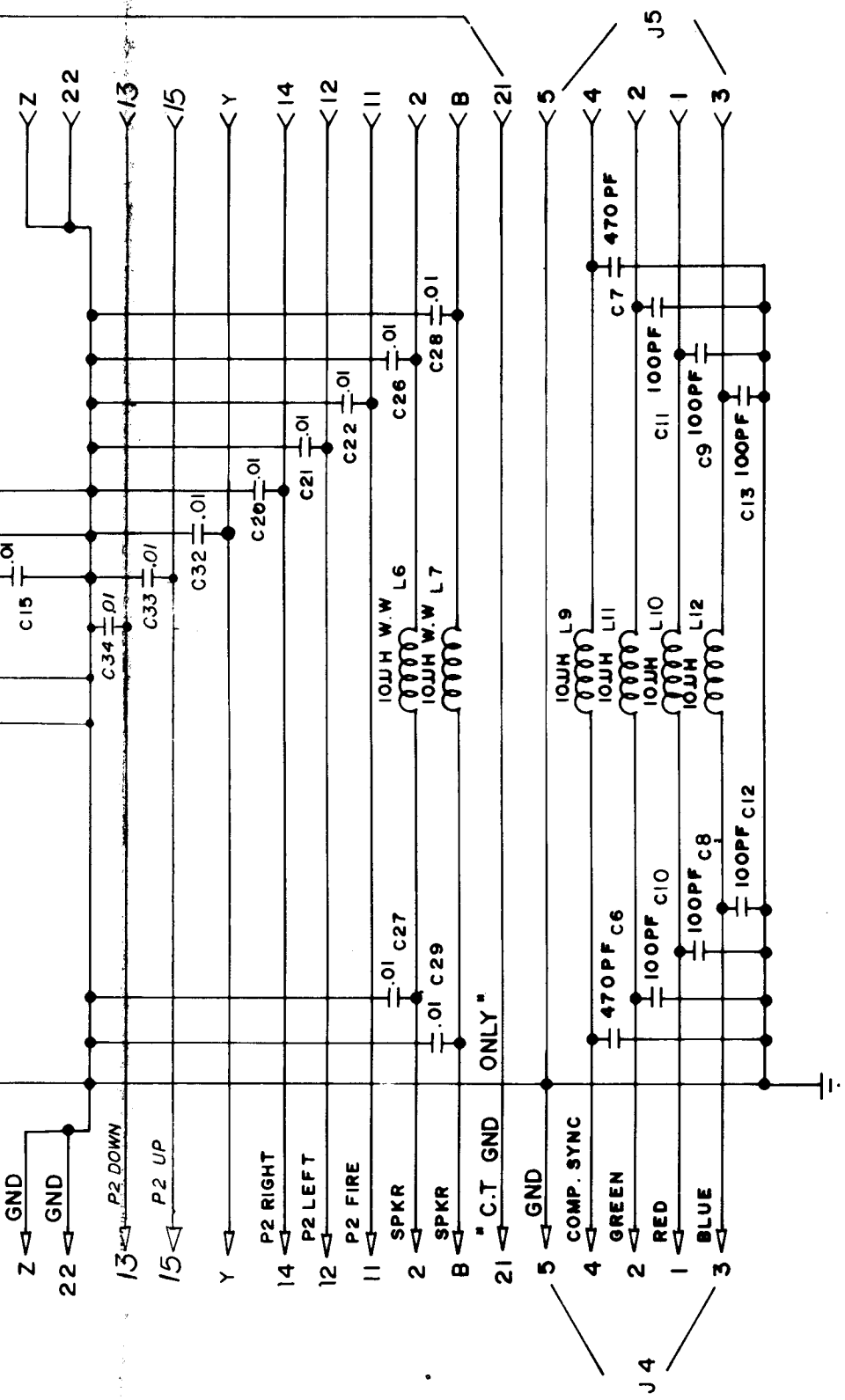

NOTE:

ALL .1+.01 ARE MF
ALL CAPS AX. CER. UNLESS NOTED OTHERWISE

* 1.5 AMP (MILLER TYPE) INDUCTORS

PROJECT ENG: L. DEKKER

THIS DWG IS CONFIDENTIAL & PROPERTY OF MIDWAY MFG CO

DIM. TOLERANCES UNLESS OTHERWISE SPEC			
CONCENTRICITY T I R	.002	BOSCONIAN	MIDWAY MFG. CO. FRANKLIN PK., IL 60131 A BALLY CO
FRACTIONAL	± 1/64	M.M 12-2-83	FULL
DECIMAL	± .005		
HOLE DIA	+ .002 - .000		BOSCONIAN FILTER BOARD A084-91[illegible]55
ANGLE	± 1/2°		
DO NOT SCALE DWG			

REVISIONS

PART NO M051-00550-A015