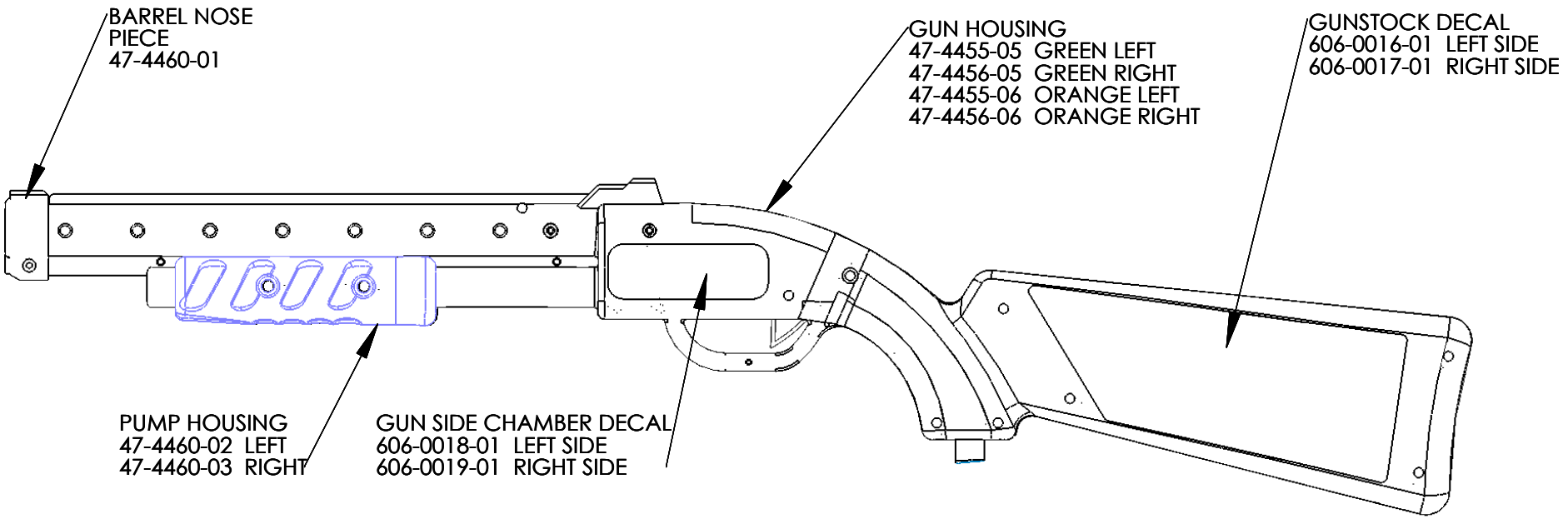
BARREL NOSE
PIECE
47-4460-01
GUN HOUSING
47-4455-05 GREEN LEFT
47-4456-05 GREEN RIGHT
47-4455-06 ORANGE LEFT
47-4456-06 ORANGE RIGHT
GUNSTOCK DECAL
606-0016-01 LEFT SIDE
606-0017-01 RIGHT SIDE
PUMP HOUSING
47-4460-02 LEFT
47-4460-03 RIGHT
GUN SIDE CHAMBER DECAL
606-0018-01 LEFT SIDE
606-0019-01 RIGHT SIDE

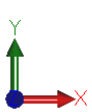
Y
X