G426601E REV1.2

INSTALLATION & USER MANUAL

STOP

IMPORTANT

- To use this machine safely and correctly, read this manual carefully.
- After reading this manual, be sure to keep it available nearby the product or somewhere convenient so that it can be referred to whenever necessary.
- When transporting or reselling this product, be sure to attach this manual to the product.

simuline

BEFORE USING THIS PRODUCT

Thank you for purchasing our arcade use simulator equipment “CYCRAFT” game machine.

Safety notes:

To ensure the safe usage of the product, be sure to read the following before using this product. The following instructions are intended for the users, operators and the personnel in charge of the operation of the product.

After carefully reading and sufficiently understanding the warning displays and cautions, handle the product appropriately. Be sure to keep this manual available nearby the product or somewhere convenient so that it can be referred to whenever necessary.

In this manual, explanations, which require special attention, are enclosed with dual lines. Depending on the degree of potential hazards, the terms of DANGER, WARNING, CAUTION, etc. are used.

Be sure to understand the contents of the displays before reading the text.

Indicates that mishandling the product by disregarding the instructions can cause severe injury.

Indicates that mishandling the product by disregarding the instructions can cause a potentially hazardous situation that can result in serious injury.

Indicates that mishandling the product by disregarding the instructions can cause a slightly hazardous situation that can result in light personal injury and or material damage.

For the safe usage of the product, the following pictographs are used:

Indicates, “HANDLE WITH CARE”. In order to protect personnel and equipment, this display is attached to places where the Owner’s manual and or Service Manual should be referred.

Indicates a “Protective Earth Terminal”. Before operating the equipment, be sure to connect it to the Earth line.

Perform work in accordance with the instruction herein stated.
Follow instructions carefully paying special attention from the standpoint of accident prevention. Failure to follow instructions can cause accidents. Instructions will point out those jobs requiring trained technicians or servicemen.

Before installing the product, check for the electrical specification sticker.
SIMULINE products have a sticker on which the electrical specifications are detailed. Ensure that the product is compatible with the power supply voltage and frequency requirements of the location in which the machine is to be installed.

Install and operate the product only in places where appropriate and sufficient lighting is available such that warning stickers can be clearly read.

Be sure to turn off power before working on the machine.
To prevent electric shock, be sure to turn off power before starting any work in which the worker is exposed to the interior of the product.

Exercise great care when handling the monitor.
Some of the monitor parts are subjected to high-tension voltage. Even after turning the power off, some components retain high-tension voltage. Only qualified service engineers should perform monitor repair and replacement.

Be sure to adjust the monitor properly.
Do not operate the product with on-screen flickering or blurring unadjusted. Using the product with the monitor not properly adjusted may cause dizziness or a headache to an operator, a player, or the customers.

Specification changes, removal of equipment, conversion and or additions not designated by SIMULINE is not allowed.
Do not make any engineering changes by alterations, unauthorized parts replacements or other modifications under any circumstances. Should doors, lids and protective parts be damaged or lost, refrain from operating the product, and contact the office where the product was purchased from or the office of Simuline given in this manual.
SIMULINE shall not be held responsible for any accidents, compensation for damage to a third party, resulting from unauthorized changes and modifications to the product.

When transporting or reselling this product, be sure to attach this manual to the product.

*Description herein contained may be subjected to improvements and changes without notice

**The contents described herein are fully prepared with due care. However, should any question arise or errors be found, please contact SIMULINE.

INTRODUCTION OF THIS INSTALLATION & SERVICE MANUAL

This manual is intended to provide detailed descriptions together with all the necessary information covering the general operation of electronic assemblies, electro mechanicals, servicing control, spare parts, etc. for the product, CYCRAFT.
This manual is intended for the owners, personnel and managers in charge of operation of the product. Operate the product after carefully reading and sufficiently understanding the instructions. If the product fails to function satisfactorily, non-technical personnel should under no circumstances touch the internal system. Please contact office where the product was purchased.

Use of this product is unlikely to cause physical injuries or damages to property. However, where special attention is required “IMPORTANT” symbol and message is given in the manual as follows:

Indicates that mishandling the product by disregarding this message can cause performance degradation or malfunctions.

DEFINITION OF PERSONNEL IN THIS MANUAL:

Non-technical personnel who do not have technical knowledge and expertise should refrain from performing such work that this manual requires the arcade maintenance personnel or a serviceman to carry out, or work, which is not explained in this manual. Failing to comply with this instruction can cause severe accidents such as electric shock.

Ensure that the arcade maintenance personnel or a serviceman performs parts replacement, servicing & inspections, and troubleshooting. It is instructed herein that the serviceman who has technical expertise and professional knowledge in the field should perform particularly hazardous work.

The following definitions for personnel are used in this manual:

- **Arcade maintenance personnel**
  Those who have experience in the maintenance of amusement equipment and vending machines, etc. and also participate in the servicing and control of the equipment through such routine work as equipment assembly and installation, inspections, and replacement of parts and consumables, etc. within the amusement facilities and or locations under the management of the owner and owner’s operators of the product.

- **Service Person**
  Those who carry out inspections and maintenance services of the CYCRAFT should be under the authorization of Simuline Inc or Sega (Japan / Europe / USA)
  It is mandatory that the Service Person must have technical expertise equivalent to that of technical high school graduates in the fields of electricity, electronics and or mechanics.
- **Player**
  Persons who play games at facilities and shops where arcade amusement game machines are installed.
- **Gallery**
  Persons who are onlookers near the games at facilities and shops where arcade amusement game machines are installed.

REVISION RECORDS:

Language: English
Rev: 1.2
Modified Date: December 2003 (gb / sk / esk)
O/S Version: 1.64
Game Version: BGD0

PLACE TO BE CONTACTED:

For necessary repairs and parts, contact the Distributor whom you purchased your Cycraft.

SIMULINE, INC / CUSTOMER SERVICE

461-28
Jeon-Min-Dong
Yu-Sung-Gu
Deajeon
Korea
305-811

Phone: +82-42-610-1010
Fax: +82-42-862-0795
E-mail: sales@simuline.com
Web-Site: www.simuline.com

TABLE OF CONTENTS

1. PRODUCT SPECIFICATIONS

1.1 GENERAL SPECIFICATIONS

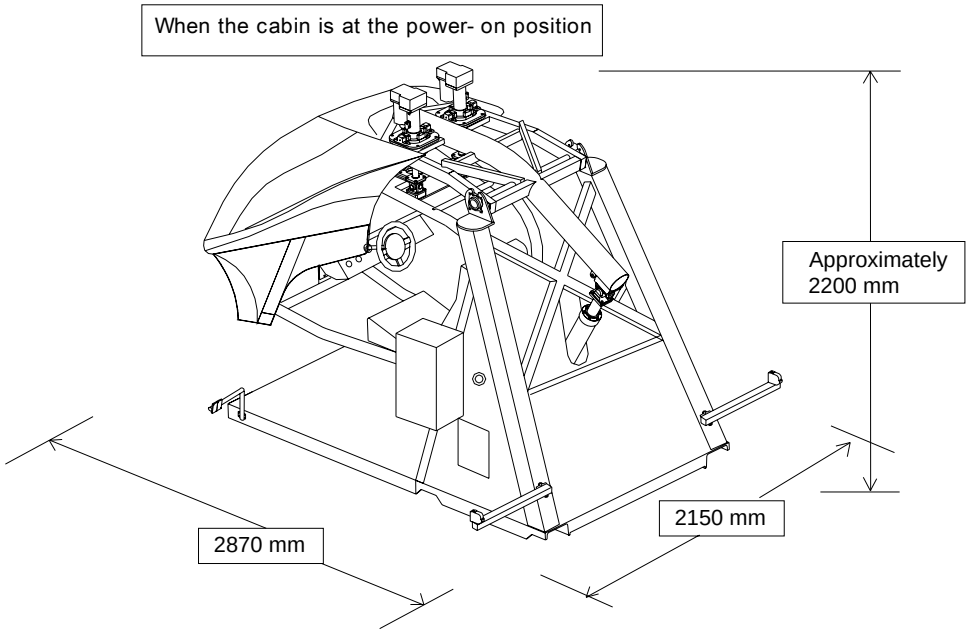

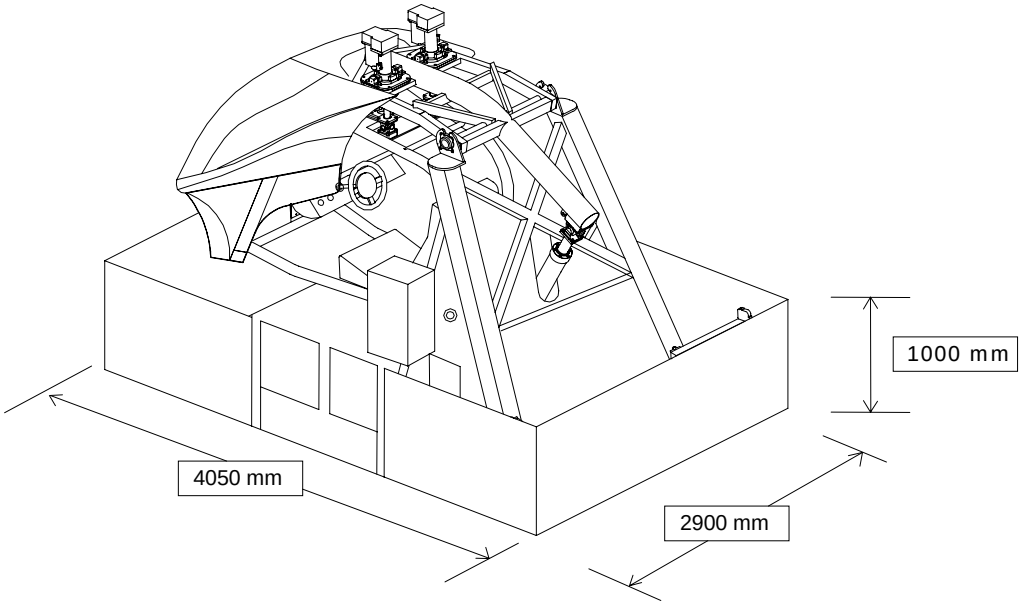

Category	Coin-op interactive motion simulator
Play type	Arcade game
Main Machine Dimensions (At the power-on position.)	**2870 mm (L) × 2150 mm (W) × ~ 2200 mm (H)**
Main Machine Dimensions (Transport dimensions)	**2890 mm (L) × 1540 mm (W) × 2020 mm (H)**
Fence Dimensions	**4050 mm (L) × 2900 mm (W) × 1000 mm (H)**
Weight	Main Machine: (Approximately) **900 kg** Fence**:** (Approximately) **110 kg**
Electric Power	**Single phase AC 200/208/220/230/240 V,** **50/60 Hz, (Max) 10A**
No. Of Passenger	Single Player
Passenger Weight Limit	**120 Kg**
Compartment	Semi-enclosed with seat belt

1.2 MOTION SYSTEM DESCRIPTION

The motion actuation system used in Cycraft is a very unique, high tech system that distinguishes Cycraft from other simulator products. The motion system has the following special features:

- **Fully electric motion system:** The actuators are fully Electrical (no hydraulics), making it superior in terms of maintainability and transportability.
- **Patented "inverted" configuration (virtual 5 DOF system):** The motion actuators are configured such that pitch and roll rotational motions have their center of rotations above the passenger. This patented technology enables the simulator to produce the effects of a 5 X DOF (degrees of freedom) motion system although it has only 3 DOF mechanically. Therefore, fast and accurate motion cueing is made possible without increasing costs.

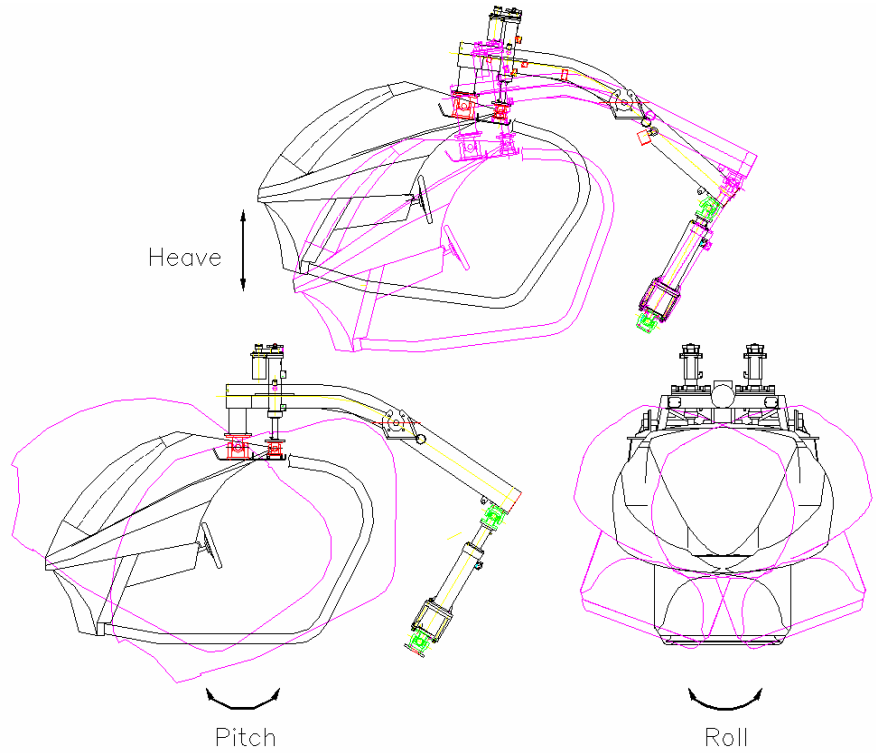

3 DOF Motion Systems

The heave actuator produces up/down heave motion by rocking the rocker arm, which holds the passenger cabin. The two suspended actuators on the rocker arm assembly produce the relative pitch and roll motions

Separate controllers inside the MSCU control each of the linear actuators. The controllers are in turn connected to the motion controller board, which generates the commands for each actuator via high-speed industrial Control Area Network (CAN) cable.

During the game, the game computer regularly sends the attitude data and other dynamic properties data in real time to the motion control computer. The motion board then calculates in real time, the motion necessary to give the passenger the best feeling of reality and converts this motion to commands for the motion controllers and actuators.

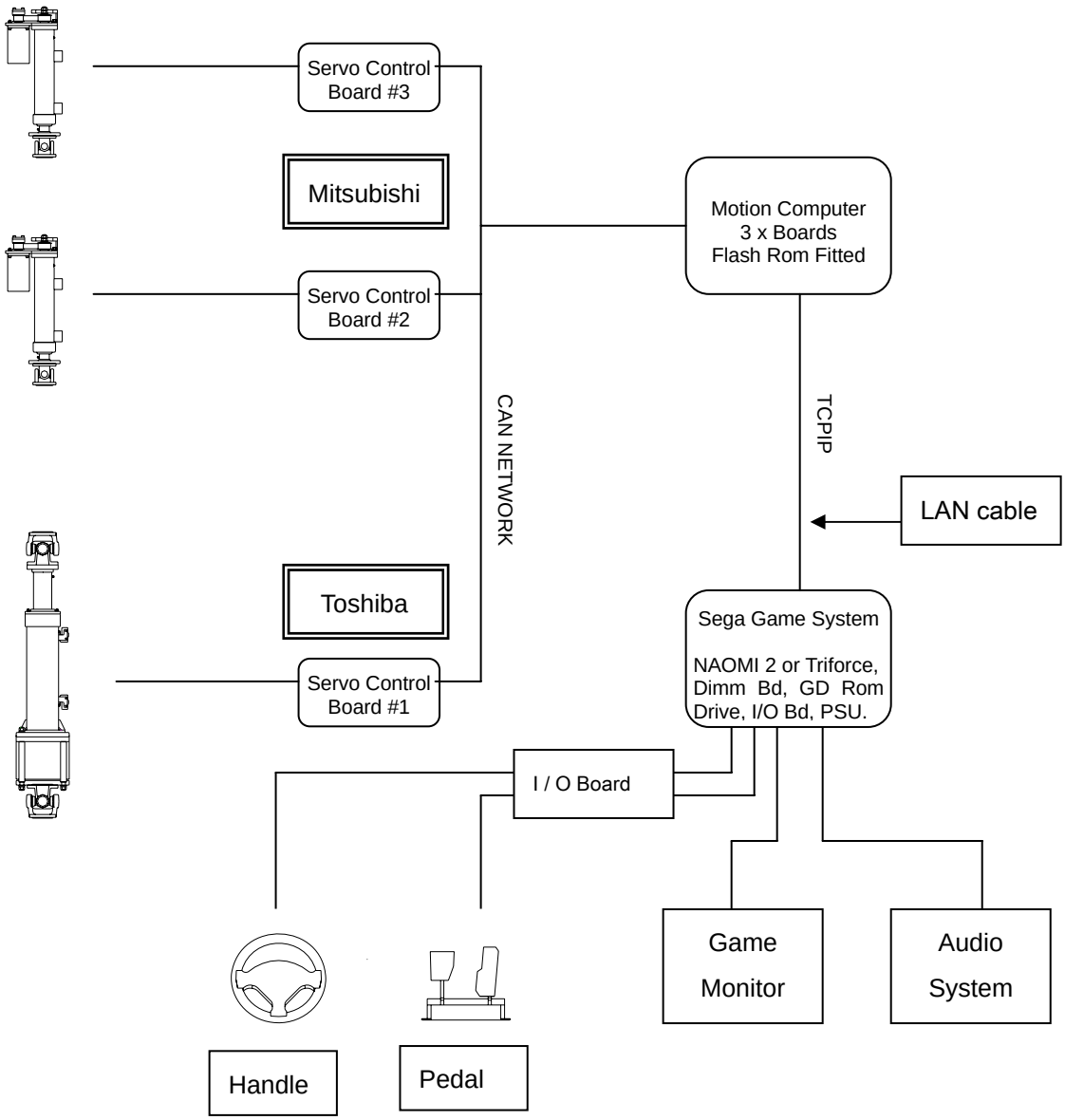

SYSTEM DIAGRAM OF CYCRAFT

1.3 SAFETY SYSTEM FEATURES

Operators of Cycraft should familiarize themselves with the safety features of Cycraft to ensure that they are functioning properly for safe and proper operation. Cycraft incorporates a number of safety features to ensure that accidents and injury will not be caused to passengers and on-lookers due to the motion of the simulator. Following is a description of each safety feature.

- **Fence:** A sturdy metal fence with an entrance door is provided with Cycraft. It will ensure that on-lookers and waiting players will be kept a safe distance from the moving cabin. The fence will also prevent on-lookers from approaching too closely and unnecessarily tripping the photo sensors during play. Warning signs and regulation signs are attached to the fence and door to inform customers and on-lookers.
- **Side Photo Sensor:** Two photo sensors attached on either side of the outer frame of Cycraft cause the motion to stop if any obstacle obstructs the line between the sensor and the reflective plate during play. Therefore, even if people enter the fence and approach Cycraft when it is moving, safety is ensured since the photo sensor will be tripped and motion stopped. Motion resumes 3 seconds after the obstacle is removed.
- **Floor Sensor:** The floor plate beneath the cabin (seat) is a pressure sensor, which activates when stepped on. It is guaranteed to detect pressures above 20 kg. Activation of the floor sensor will stop the Cycraft motion as with the photo sensors described above. Motion will re-activate 3 seconds after the pressure is removed. The floor sensor guarantees safety even in the case when people somehow approach Cycraft without tripping the photo sensor and also in the case when the passenger falls from the cabin during play for any reason.
- **Seat Belt Sensor:** The seat belt buckle in Cycraft is equipped with a sensor that detects when the seat belt is fastened or not. Cycraft will not start the game unless the seat belt is fastened properly. Also, if the seat belt is unfastened during the game, the motion will stop until it is re-fastened.
- **Game Stop Button:** This button, located inside the cabin allows the player to stop the game anytime during play. Pressing this button will terminate the game and lower the cabin to the initial position.
- **Motion Stop Switch:** The motion stop button located behind the coin chute case stops the motion when pressed. Motion restarts 3 seconds after the button is released. This button can be pressed by outside on-lookers or by the operator in

case the photo or floor sensors cannot be activated or the motion must be stopped for safety reasons.

- **Power Cutoff Switch:** This button located inside the operator panel but accessible through a sliding door on the operator panel cover shuts off the main power to the system. Pressing this switch will stop the ongoing motion of the system but will not stop and hold the position of the cabin as with the other buttons and safety features. Instead, the cabin will slowly pitch forward (nose down) and glide down to its lowest position due to its own weight. Therefore, **this switch should NOT be pressed when the motion needs to be stopped.** This switch should only be used in the rare emergency case when power must be cut off such as when a fire is ignited.

WARNING

NEVER press the power cutoff switch when there is a person or obstacle UNDER the cabin. The cabin will glide down after the switch is pressed and can cause serious injury to anybody under the cabin.

- **Safety Link** (page 29) **and Safety Oriented Mechanical Design:** The safety link located on the rear part of the rocker arm functions to prevent a free fall of the cabin in case the heave actuator is broken off from the rocker arm. The two rocker arm bearings and center shaft of the rocker arm is designed such that even if one of the bearings comes loose, the shaft will be held up by the frame to prevent a fall. The cabin is suspended by three universal joints (central joint and two joints connecting to the actuators). Therefore, even if one of the joints fail, the other two will support the cabin to prevent a complete free fall.
- **Other Safety Features:** Cycraft is equipped with Brake Boards to supply step down voltages to critical motor controller circuits, in case of power outages so that the cabin (seat) does not fall abruptly. At power outages (and also when the power cutoff switch is pressed) the motor control circuits with brake boards will make sure that the simulator will shutdown and rest softly.
- **Safe Inherent Design:** The basic configuration of the inverted motion system allows for the cabin to be suspended much lower from the ground than conventional motion simulators. Also, it is dynamically much more stable by making it very difficult to tip the cabin over to it's side. Thus, the Cycraft structural design is inherently much safer than conventional motion simulators.

INITIAL INSPECTION

2.1 PACKING LIST

CYCRAFT PACKING LIST (1/2)			
No	Item	Description	Qty
1	CYCRAFT Main Body		1 ea
2	Rear Caster (R)		1 ea
3	Rear Caster (L)		1 ea
4	Floor Sensor Plate (A)	A Type	1 ea
5	Floor Sensor Plate (B)	B Type	1 ea
6	Floor Sensor Plate (C)	C Type	1 ea
7	Floor Sensor Plate (D)	D Type	1 ea
8	Boarding Step		1 ea
9	Coin Chute Tower		1 ea
10	Fence Holding Bracket (A)	1030 mm	1 ea
11	Fence Holding Bracket (B)	690 mm	1 ea
12	Fence Holding Bracket (C)	550 mm	1 ea
13	Gate Door (R)		1 ea
14	Gate Door (L)		1 ea
15	Fence Pole (A)	A Type	4 ea
16	Fence Pole (B)	B Type	2 ea
17	Fence Pole (C)	C Type	3 ea
18	Wire Mesh	1200 mm	6 ea
		1800 mm	2 ea
19	Installation Kit Box	Safety Link	1 ea
		Boarding Step Joint Bracket	2 ea
		Fence U Bracket	32 ea
		SUS Wrench Bolt M6x10L	32 ea
		SUS Wrench Bolt M6x25L	32 ea
		SUS Nut M6	32 ea
		Counter Sink Head Bolt	4 ea
		Hex Bolt M12 x 35L	10 ea
		Hex Bolt M8x30L DU Bush10*15	8 ea

CYCRAFT PACKING LIST (2/2)			
No	Item	Description	Qty
19	Hex Bolt M8x20L		10 ea
	Hex Nut M8		7 ea
	Clamping Filter		1 ea
	Fence Sign Plate		4 ea
	Fence Sign Ring Clip		8 ea
	Play Instruction Sticker		1 set
	Installation & User Manual		1 ea
20	Spare Parts Box	Floor Sensor Micro switch	2 ea
		Monitor BD Fuse	1 ea
		Cable Tie	5 ea
		Pushbutton Lamp	2 ea
		Grease Gun	1 ea
		Grease	400g
		Paint (Red)	200ml
		Fence U Bracket	2 ea
		SUS Wrench Bolt M6x10L	2 ea
		SUS Wrench Bolt M6x25L	2 ea
		SUS Nut M6	2 ea
		Count Sink Head Bolt M6x 10L	2 ea
		Hex Bolt M12 x 35L	2 ea
		Hex Bolt M8x30L DU Bush10*15 Rubber Washer	2 ea
		Hex Bolt M8x20L	2 ea
		Hex Nut M8	2 ea
		Truss Bolt M4 x12L	5 ea
		Round Head Bolt M5x10L	4 ea
		Harness for coin mechanism	1 set
21	NAOMI2 Carton		1 ea
22	GD-ROM Carton		1 ea

		Rubber Washer					

2.2 GENERAL RECEIVING INSPECTION

STOP
IMPORTANT

Only QUALIFIED SERVICE PERSONNEL should carry out inspection.

All Simuline products are manufactured so that operation is possible immediately after the proper installation. However, it can be possible that an irregular situation occurs during transport and delivery to prevent this. To verify that transport and delivery has be carried out without irregularity, a proper general receiving inspection should be made as follows:

- Are then any dented parts or defects (cuts, etc.) on the external surfaces of the product?
- Are castors and leg adjusters present and undamaged?
- Do the power supply voltage and frequency requirements match with the local supply?
- Are all wiring connectors correctly and securely connected? Unless connected in the correct direction, connector connections cannot be made successfully. Do not insert connectors forcibly.
- Are all IC's of each IC board firmly inserted?
- Does the power cord have any cuts or dents?
- Do fuses meet the specified rating?
- Are such units such as monitors, control equipment, IC boards, etc. firmly secured?
- Are all earth wires connected?
- Are all accessories available?
- Can all doors and lids be opened with the accessory keys and/or tools?

3. NAMES OF MAJOR PARTS

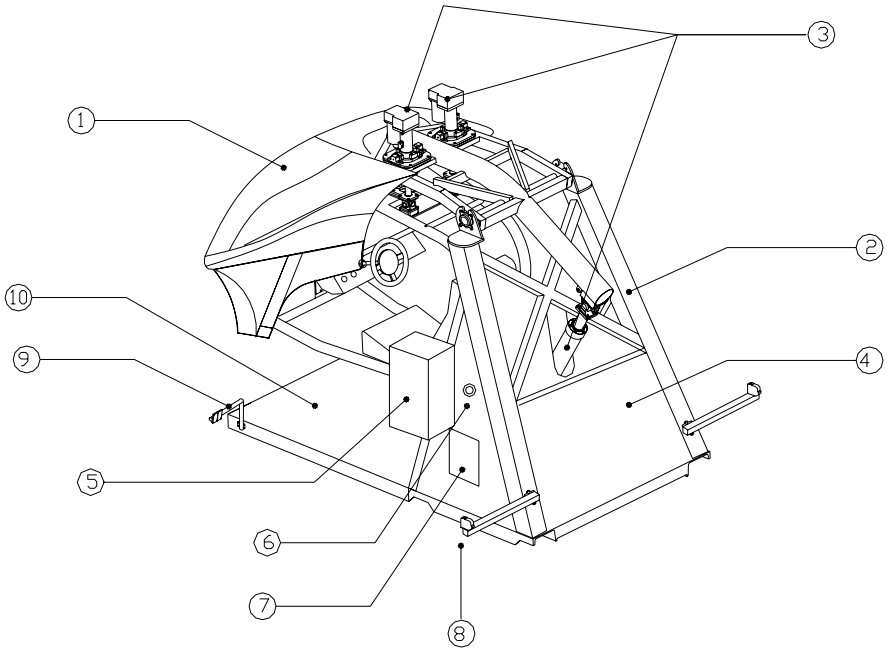

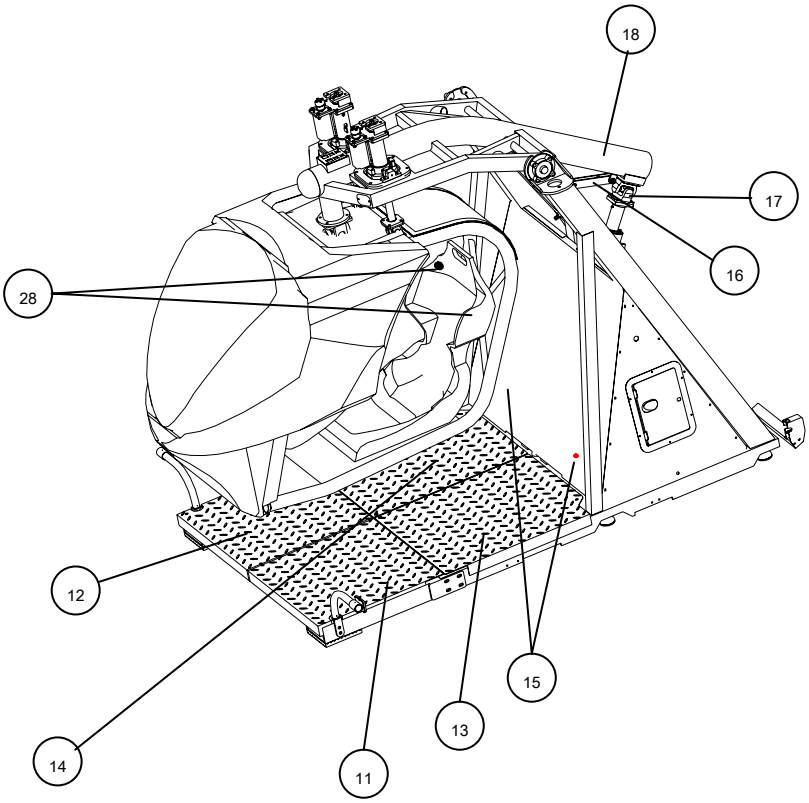

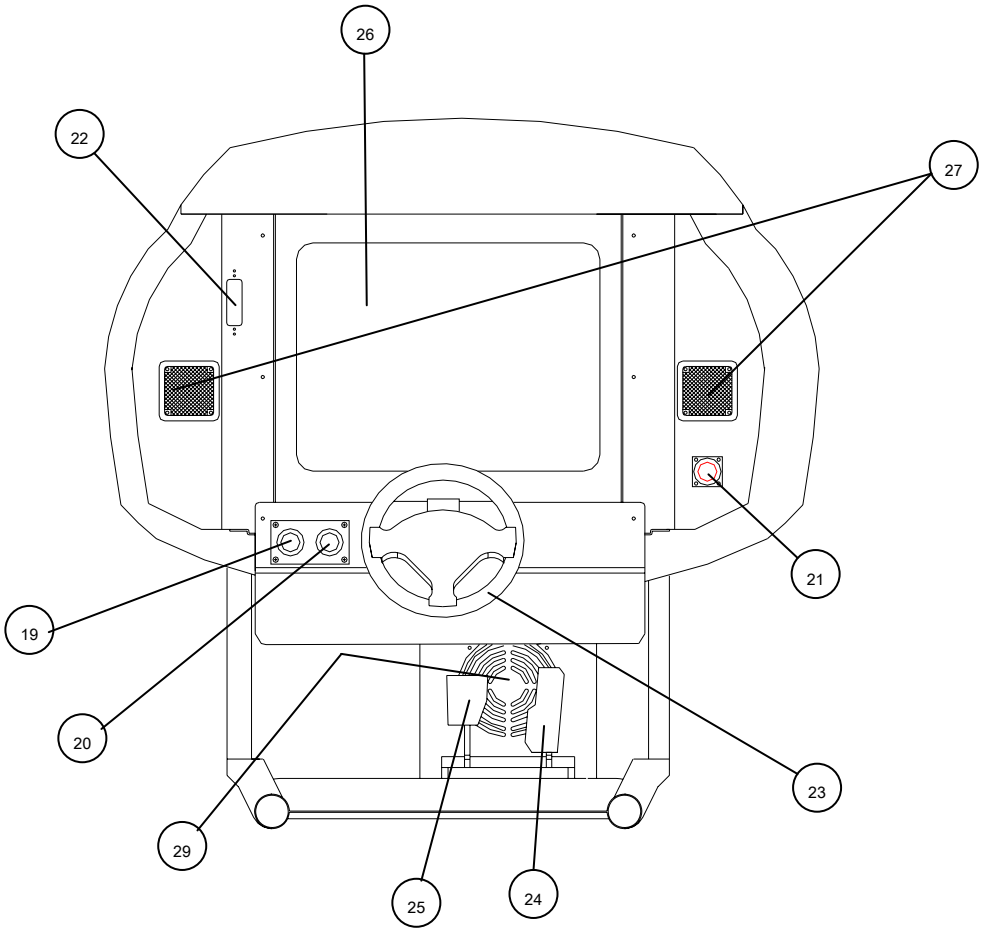

No.	Item	Description
1	**Cabin (Seat + Monitor)**	Carries the player and moves during operation.
2	**Main Frame**	Holds the cabin, actuator system and electronics.
3	**Actuators**	Three electric linear actuators that move the cabin in 3 DOF (degrees of freedom). The two actuators on top of the cabin creates pitch and roll motions. The actuator behind the cabin creates heave motion.
4	**Motion System Cabinet Unit (MSCU)**	Houses all the control electronics and electrical components.
5	**Coin Chute Tower**	Carries the coin chute mechanism.
6	**Motion Stop Switch**	Pressing this button will stop the simulator motion but game play will continue. Motion resumes 3 seconds after the switch is released. This button can be used in case of emergency when motion must be stopped.
7	**Operator Panel**	Houses indicators and switches to set and control Cycraft. Refer to Chapter 2 for details.

8,9	**Safety Photo Sensors & Reflectors**	There are 2 photo sensors on each side of the outer frame. If any of the sensor lines are obstructed, the simulator will stop in its current orientation until 3 seconds after the removal of the obstruction.
10	**Safety Floor Sensor**	The metal floor plate underneath the cabin is a pressure sensor that stops the simulators motion when stepped on. The simulator will begin to move again 3 seconds after the removal of the pressure.
11~ 14	**Safety Floor Sensor Plates**	11 = A type, 12 = B type, 13 = C type, 14 = D type
15	**Floor Sensor Indicator Lamp**	Lamp (Green) goes off when the floor sensor is activated.
16	**Safety Link**	Safety link connected to the rocker arm.
17	**Heave Actuator Joint**	
18	**Rocker Arm**	Tilts up and down to create heave motion.
19	**Start Button**	Begins the game after coin is inserted.
20	**View Button**	Changes the driver's view perspective during play.
21	**Game Stop Button**	Terminates the game and lowers the cabin to the initial position.
22	**Video Control Buttons**	Removing this cover exposes the control buttons to adjust video screen parameters. Refer to Chapter 2 for details.
23	**Steering Wheel**	Produces steering input for the game.
24	**Accelerator Pedal**	Produces accelerator input for the game.
25	**Brake Pedal**	Produces braking input for the game.
26	**Monitor**	Displays game graphics.
27	**Front Speakers**	Produces audio effects.
28	**Rear Speakers**	Produces audio effects.
29	**Subwoofer**	Produces audio effects with low frequency

4. TRANSPORTING AND MOVING

4.1 EQUIPMENT REQUIRED FOR UNLOADING AND TRANSPORT

No	Equipment	Description	Qty	Purpose
1	Fork Lift	Capacity over 1500 kg Boom attached fork	1	Lift and transport out of packing crate.
2	Wood block	10 cm x 10 cm x 100 cm 	4	Set under the base frame so that fork can be inserted and removed easily.
3	Rear caster (Supplied)		2	Used together with front casters (already installed) to roll the machine to destination location.
4	Socket wrench & **Extension bar (Over 200 mm)**	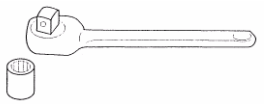	1	Attaching the rear casters.
5	Wrench	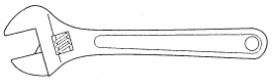	1	Adjusting the level of casters.
6	Philips type screwdriver	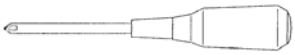	1	Loosening and securing truss bolts
7	Bolt	Hex head M12 x 35 L	6	Attaching the casters

4.2 UNLOADING AND OPENING THE CRATE

1) When unloading the crate from the container or truck, it is recommended to insert the forklift from the heavier rear side of the crate.
2) The crate should not be opened from the front. Open the rear and/or one of the sides when opening the crate.

4.3 UNPACKING AND INSTALLING REAR CASTER WHEELS

1) After the crate is opened, unpack the separate accessories and components so that the main simulator body is accessible.
2) Insert forklift from the *rear* of Cycraft or from the *side*. ***DO NOT INSERT FORKS FROM THE FRONT SIDE.*** When inserting forks from the side, make sure the forks are positioned to enter the cutoff sections in order to ensure Cycraft does not tip over. Insert forks fully until the tips are visible on the other side.

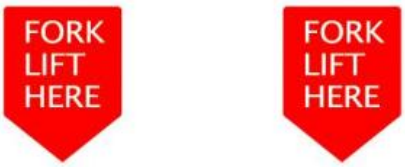

Fork Lift Insert Mark

DO NOT INSERT FORKS FROM THE FRONT SIDE

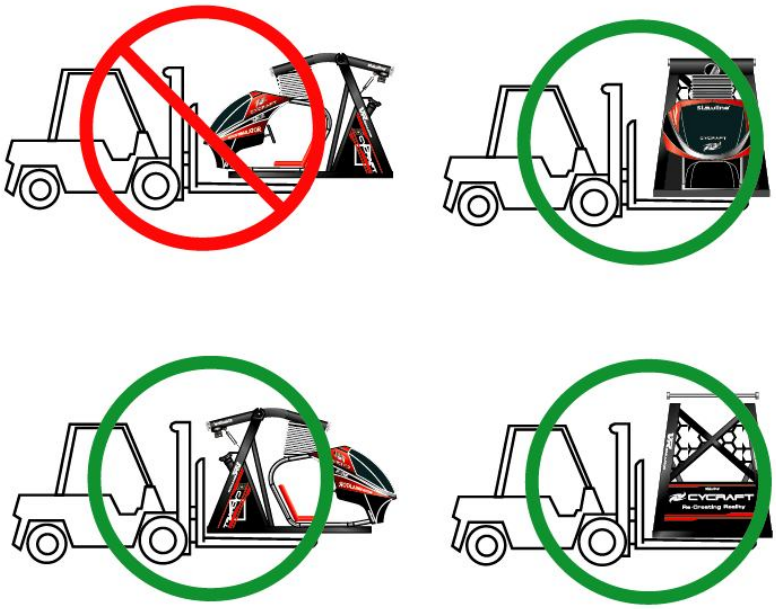

3) After CAREFULLY taking Cycraft out of the crate, install the rear two wheels by

first removing the MSCU cover as shown in the figure below. Note that the front two wheels are already installed.

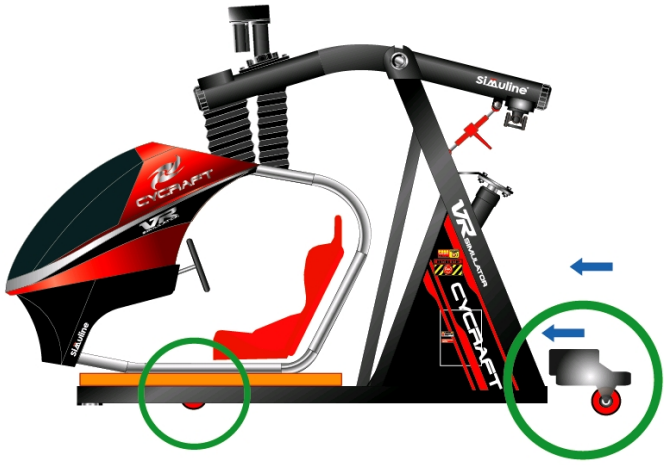

3 x Hex head Bolt M12 x 35L

Socket wrench (19mm) &

Extension bar

(Over 200 mm)

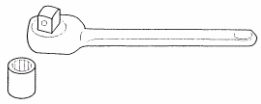

STOP

IMPORTANT

Be careful not to step on and damage the floor pressure sensor springs and switches installed on the frame beneath the cabin

4) Adjust the heights of the wheels by rotating the nut on top of each wheel using wrench until Cycraft is raised sufficiently for transport. Then, carefully roll Cycraft to its destination location. After Cycraft is positioned in it's installation location, lower Cycraft by turning the wheel height adjustment nuts counterclockwise and disassemble each of the wheel assembly.

To lift up the base frame, turn the nut **clockwise**

4.4 MOVING THE MACHINE

STOP
IMPORTANT

Only QUALIFIED SERVICE PERSONNEL should carry out this operation.

Cycraft simulator is a complex & delicate machine. Special care must always be taken when handling Cycraft.

When moving Cycraft within a facility, it is recommended to utilize the casters provided with the product. It is not necessary to disassemble the heave actuator and/or the safety link. Only the fence and boarding step with coin chute need to be disassembled.

When Cycraft must be moved long distances by truck, it is recommended that the heave actuator and safety link be disassembled such that the cabin is set securely on the base of the outer frame. Trucking Cycraft without the heave actuator disassembled can cause mechanical damage to the actuator due to shock and vibration during transport. Be sure to lay the wooden plate between the cabin and the base frame as when Cycraft was delivered. This plate protects the floor sensors and switches during transport.

WARNING

- **When moving the machine, be sure to remove the power cord and plug from the power supply. Moving the machine with the power cord inserted can cause the power cord to be damaged, resulting in a fire or electric shock when installed in a new location.**
- **When moving the machine, with the heave actuator in the assembled state, make sure that the machine is not exposed to high vibrations and shock. Mechanical and structural damage can result.**

5. INSTALLATION INSTRUCTION

5.1 LOCATION REQUIREMENTS

5.1.1 ENVIRONMENT REQUIREMENTS

Cycraft is designed for **indoor use** and should never be installed outdoors. Environment and facility requirements are as follows:

Installation location	Indoor use only
Ambient temperature	5 to 40 C
Humidity	10 to 70 % (no condensing)
Min. Entrance dimensions	**1540 mm (W) x 2100 mm (H)**
Min. Ceiling Height	2400 mm (H)
Min. Footprint (incl. Fence)	4050 mm (L) x 2900 mm (W)
Min. Floor Loading	**310 kg/m^2**
Cleanliness	Free of dust and debris

- Never install the game machine outdoors

Also avoid the following locations even though they are indoors.

- Near a leaky roof, close to any kind of dripping water, or any place with high humidity that can condense
- Close to an indoor pool or showers
- Exposed to direct sunlight
- Exposed to direct heat, such as close to a heater vent, or in a highly heated room
- Close to flammable or volatile chemicals, or dangerous materials
- Avoid floors that slope(any slope more than 2 degrees)
- Avoid strong vibrations
- Avoid dusty locations
- Avoid any location that does not allow enough space around the machine

5.1.2 ELECTRICAL REQUIREMENTS

The facility should provide the following electrical power outputs for Cycraft:

Input Voltage	Single Phase AC 200V, 208V, 220V, 230V, 240V
Frequency	50 / 60 Hz
Rated Current (Max)	8.5 Amp
Peak Current (Max)	**10 Amp**
Building Circuit Breaker (Recommended)	13 Amp

Note: The average power requirement is measured power consumption during normal operation. Peak power requirement is theoretical short-term peak power possible for short times during special driving conditions. Therefore, it is recommended that facility power to be based on peak power requirements for the best results.

5.2 EQUIPMENT REQUIRED FOR INSTALLATION

No	Tools	Description	Q'ty	Purpose
1	Philips type screwdriver	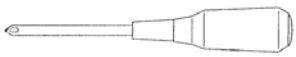	1	Loosening and securing truss bolts
2	Wrench (19 mm ~ 27 mm)	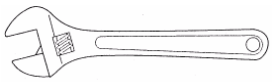	1	Adjusting the levers.
3	Hex Key (6mm)		1	Boarding step, Coin Chute Tower
4	Hex Key (5mm)		1	Fence
5	Hex Key (2.5 mm)		1	Photo sensor, mirror
6	Spanner (22 mm)	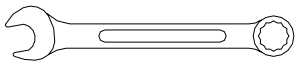	2	Turnbuckle Safety Link

7	Spanner (19 mm)	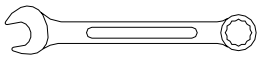	2	Heave actuator (M12)
8	Spanner (13 mm)	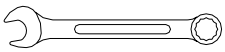	2	Floor sensor plate (M8)
9	Spanner (10 mm)		1	Fence mesh (M6)
10	Mini Socket Wrench (5/16 inch)		1	Coin mechanism

5.3 STEPS FOR INSTALLATION

Installation should be carried out according to the following steps.

STEP 1 SECURING IN PLACE (LEG ADJUSTER ADJUSTMENT)
STEP 2 CONNECTING THE HEAVE ACTUATOR
STEP 3 CONNECTING THE SAFETY LINK
STEP 4 ASSEMBLING THE FLOOR SENSOR PLATE
STEP 5 SETTING THE PHOTO SENSORS
STEP 6 COIN MECHANISM INSTALLATIONS
STEP 7 CONNECTING THE POWER CORD
STEP 8 TESTING AND ALIGNING THE PHOTO SENSORS
STEP 9 TESTING AND ADJUSTING THE FLOOR SENSOR
STEP 10 FENCE ASSEMBLY

5.4 SECURING IN PLACE (LEG ADJUSTER ADJUSTMENT)

After Cycraft is placed in location, the level pads must be adjusted correctly to prevent Cycraft from moving about the floor due to its own motion. Cycraft has 3 stationary rubber pads and 4 adjustable level pads as shown.

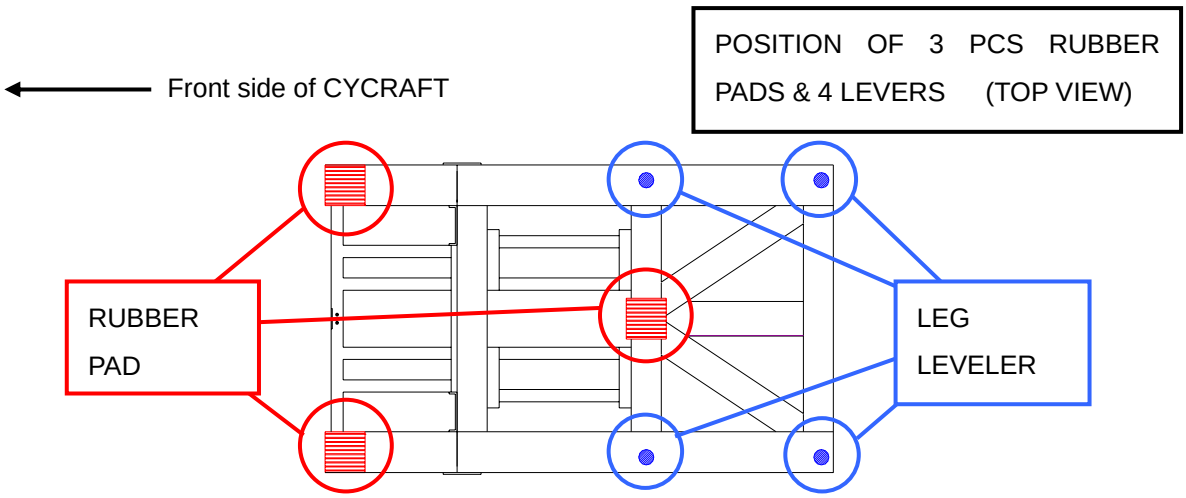

The processes to place Rubber Pads and adjust the Leg Levelers are as follows:

1) Make sure that all of the four adjustable Leg Levelers are not touching the ground. If it is, raise it so that only the three rubber pads touch the ground. The center of mass of Cycraft is very near the central rear rubber pad. Therefore, it is advisable to have two people stand on top of the front two rubber pads to make sure the three pads are touching the ground securely.

2) Lower the 4 adjustable Leg Levelers so that they touch the ground and evenly hold the weight of Cycraft. Do not extend them so much that the central rubber pad is raised from the floor.

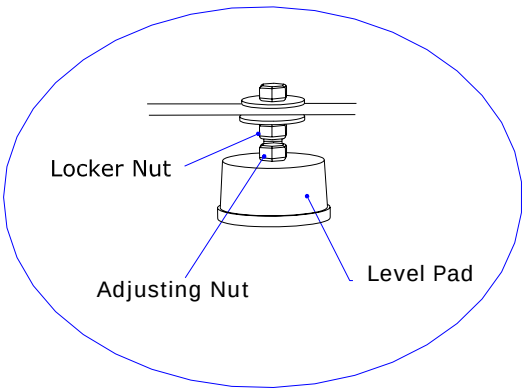

To secure the machine, turn the adjusting nut **clockwise.**

3) After you are satisfied that the pads are set correctly, you can proceed to assemble Cycraft. However, after assembly, the pads should be observed during the test runs and adjusted further if there seems to be excessive movement or uneven loading and lifting of the pads.

5.5 CONNECTING THE HEAVE ACTUATOR

DANGER

At no time during the installation and assembly process should personnel place body parts or go beneath the cabin. Take note that there is always the danger of the cabin falling.

1) Install the turnbuckle firmly between the frame and rocker arm as shown.

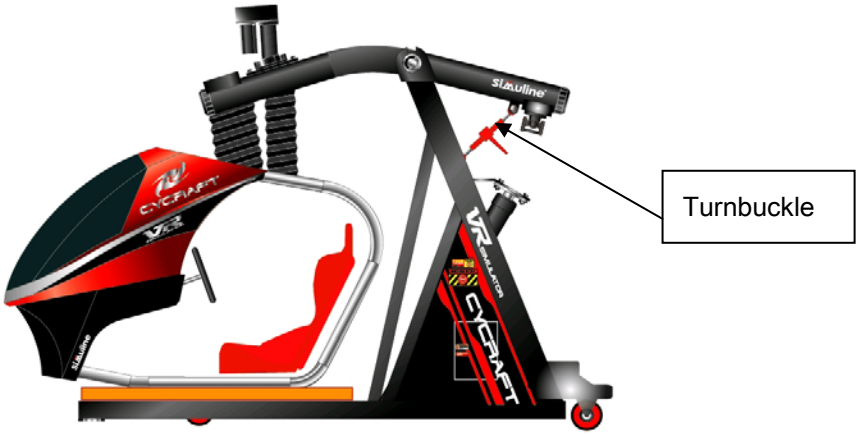

2) Turn-buckle works as a kind of ratchet mechanism. Lower the rear end of the rocker arm by ratcheting up the turnbuckle **clockwise** as seen from the rear until the turnbuckle almost go to its limit.

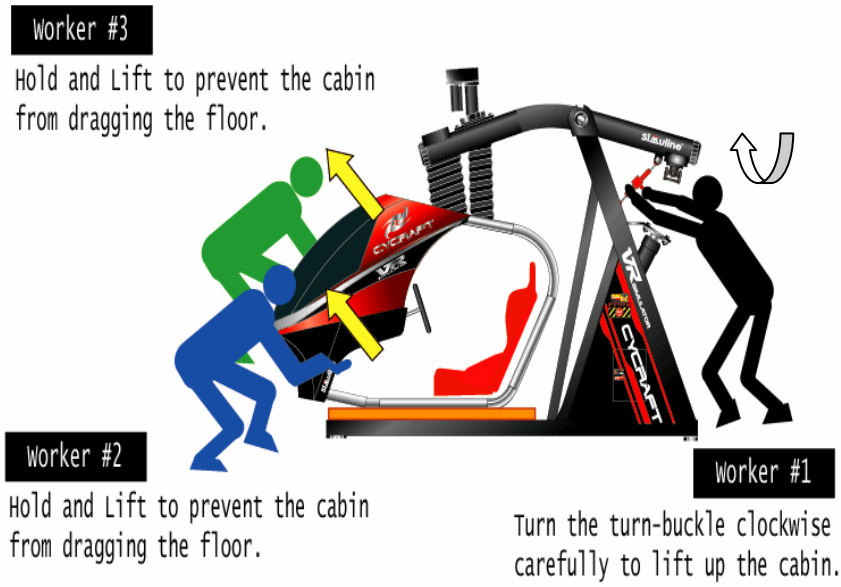

During this process the cabin will be lifted up. As it lifts up it will simultaneously tip to wards the front and slide backwards

3) Disassemble the heave actuator holding bracket and free the heave actuator. Make sure the actuator is supported so that it does not fall over to one side when the holding bracket is disassembled.

4) Rotate the actuator piston **counterclockwise** as seen from the top to extend the actuator. Match the 4 bolt holes of the flange and rocker arm mating part close

enough so that bolts can be inserted. It is not necessary to have the flange mated exactly to the rocker arm at this stage.

5) Tighten the four bolts evenly one at a time. The heave actuator piston will extend as the bolts are tightened. Tighten all four bolts to **1200** kgf•cm torque. Mark the bolt and relative side of the flange as in the figure so that it can later be inspected easily for looseness.

6) Rotate the turn-buckle **clockwise** to lower the cabin and extend the heave actuator fully. When the bolts connecting the turnbuckle to the rocker arm feels loose and the weight of the cabin is held fully by the actuator, disassemble the turnbuckle completely from each end and remove it.

5.6 CONNECTING THE SAFETY LINK

1) Position the safety link as in the figure below with the longer link section above the shorter link section. Tighten the bolt connecting the link to the rocker arm to **1200** kgf•cm torque and mark the bolt position so that it can later be inspected for looseness.

2) Make sure that the link is **bent such that the center-connecting joint protrudes forward and the link is bent in the "<" shape** as in the figure.

STOP
IMPORTANT

If the link is installed incorrectly in the reverse "L" shape (see figure), the link will hit the actuator and actuator joint when heave motion occurs and the system will be damaged. Make sure it is installed correctly.

Figure of Cycraft after assembling the heave actuator and safety link

5.7 ASSEMBLING THE FLOOR SENSOR PLATE

WARNING

NEVER go under the cabin to install or service the floor pressure sensor system when the main power is ON. Serious injury can result if the system malfunctions. Always place a structure to support the cabin in case it falls. Turn the main power off when it is necessary to go under the cabin.

CAUTION

Be careful not to damage the springs and micro switches on the bottom frame when assembling the floor sensor plates

1) Make sure there are no objects or debris on top of the lower frame structure where the floor plates must be installed.
2) **Two persons** should lift each of the 4 sections of the floor plate and place them in the specified position. Be careful not to damage the springs and micro switches.
3) There are two guide holes in each of the floor plate sections as in the figure. Insert the provided spacer, washer, and bolt assembly into each of the guide holes and tighten securely.
4) After assembly, make sure each floor plate section moves about 1/2 inches up and down freely.

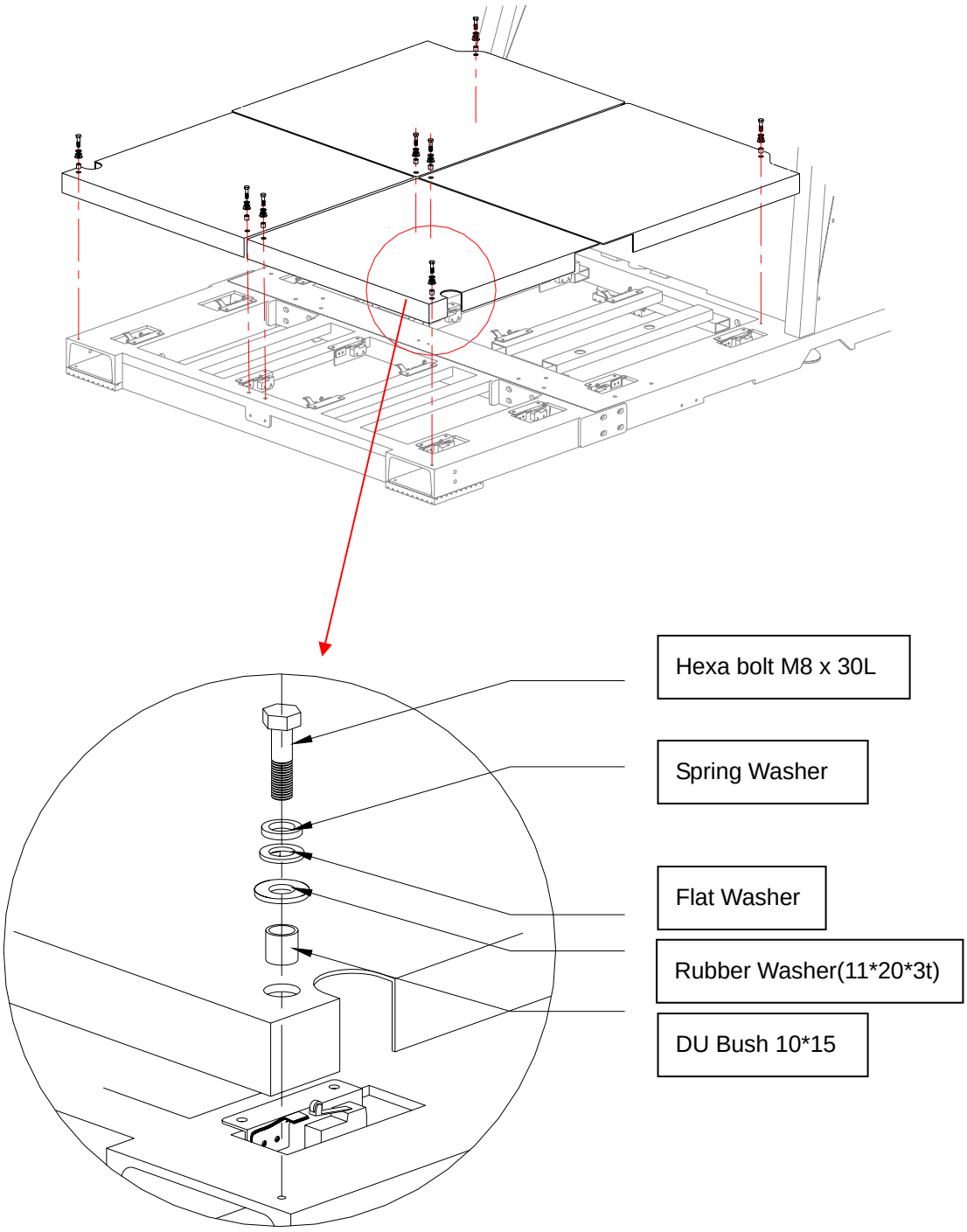
Hexa bolt M8 x 30L
Spring Washer
Flat Washer
Rubber Washer(11*20*3t)
DU Bush 10*15

5.8 ASSEMBLING THE BOARDING STEP AND COIN CHUTE TOWER

The boarding step and coin chute tower should be assembled at this stage so that electrical connections to the coin mechanism can be made and functional testing of Cycraft can be performed before final assembly of the fence. To assemble the boarding step and coin chute tower, follow the next procedure.

1) Attach the coin chute tower on the boarding step.

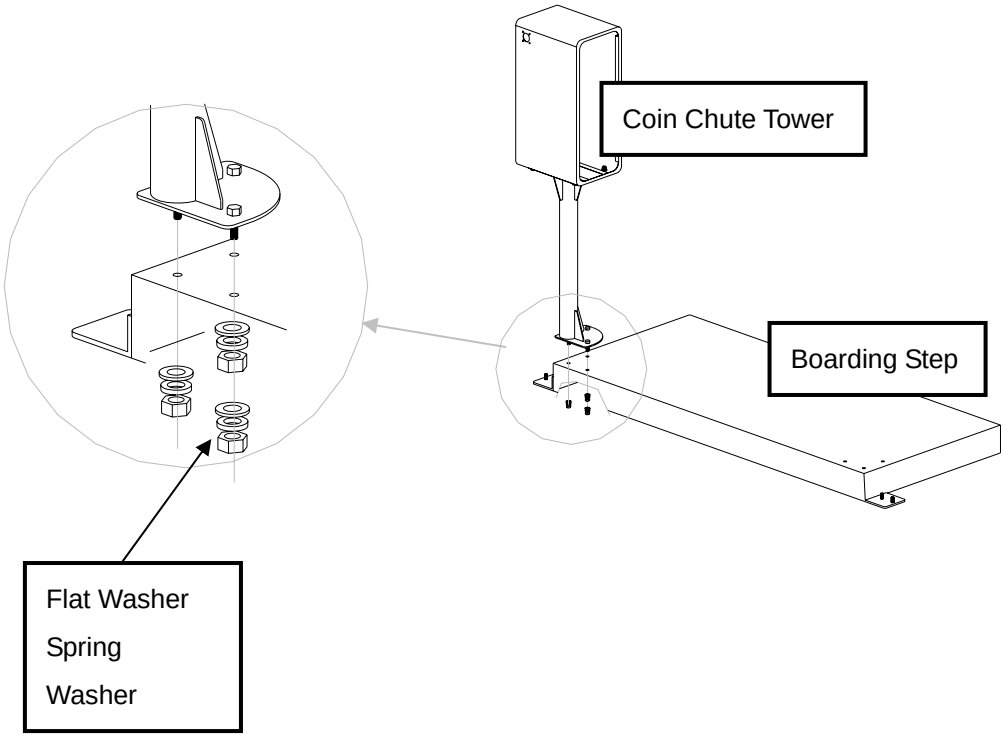

2) Then attach two boarding step joint bracket to the boarding step.

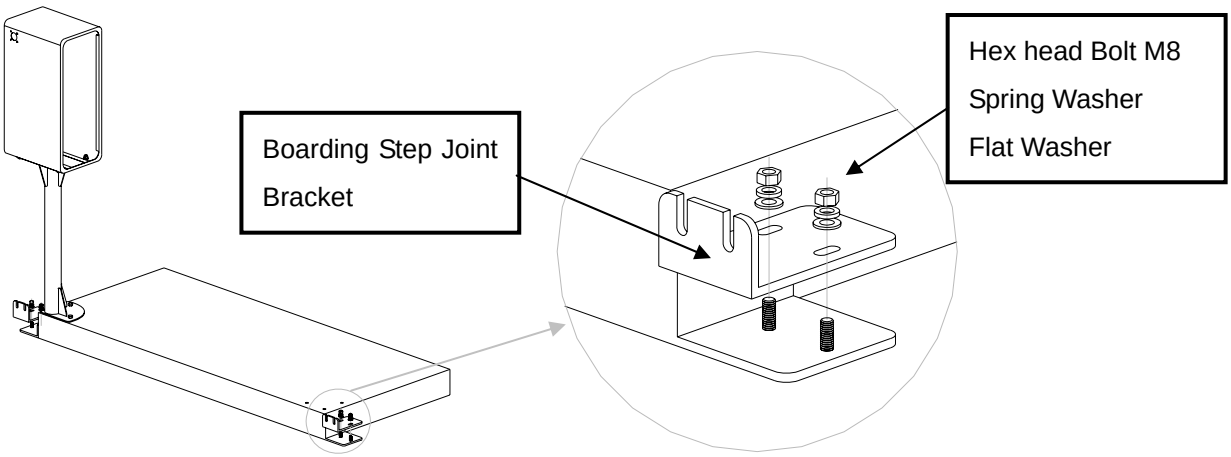

3) Position the assembled boarding step and secure it to the base of Cycraft as shown.

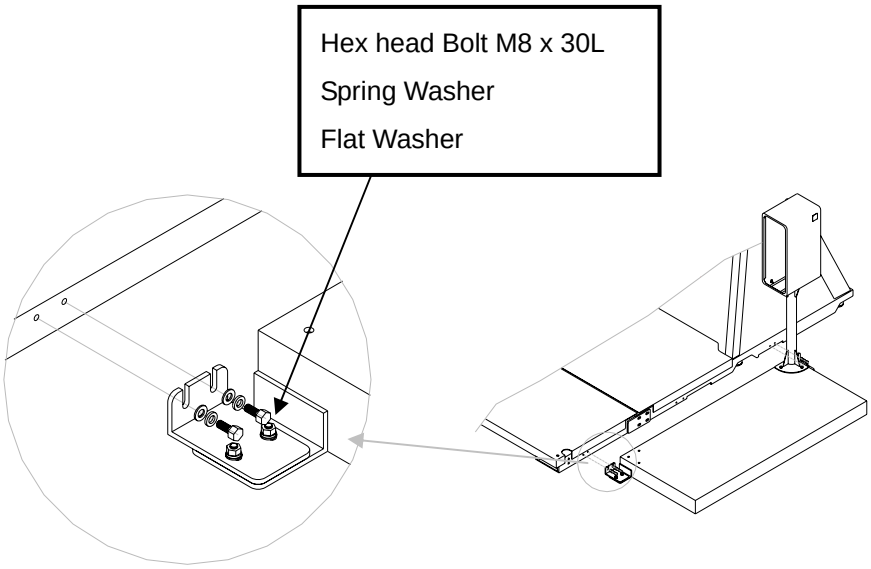

5.9 SETTING THE PHOTO SENSORS

There is a set of photo sensor and reflective plate on each side of Cycraft. Set the photo sensor system as follows:

1) Loosen the setscrews of the reflective plate arms and rotate the arms so that the reflective plates point backwards at 90-degree angles from the sides of Cycraft and tighten the setscrews.

Tool : HEX KEY 2.5 mm

2) Loosen the setscrews of the photo sensor arms and unfold them so that the arms point outward and the photo sensor lens points toward the reflective plate.

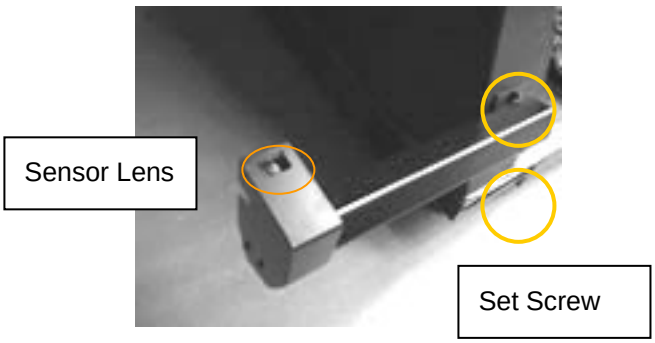

3) Tighten the setscrews to secure the arms. Remove the clear protective plastic on the photo sensor lens if it is still intact.
4) It may be necessary to adjust the photo sensor alignment later on. This process is described in the Chapter 5.12.

5.9 COIN MECHANISM INSTALLATION

STOP
IMPORTANT

Only Qualified Service Personnel should carry out this operation.

Cycraft uses the standard coin box faceplate provided by Happ Controls and Sega Enterprise. The compatible model numbers are,

HAPPS: Frame 42-3272-00
Lower Door 42-3245-16
Upper Door 42-7201-00

SEGA: ASAHI Standard. Also SR3, NRI & Alberici coin validators are electronically compatible. Contact your distributor for coin loom specifications.

The coin chute door and coin mechanism to be used must physically match the above coin chute frame. When fitting the coin mechanism to the door please refer to the specific manufacturers installation instructions for that coin mechanism.

To mechanically assemble the coin chute frame and cash door,

1) Loosen all of the bolts on the frame that secure the clips.
2) Turn all clips in towards the door.
3) Position the door into the aperture in the coin chute tower.
4) Turn the clips around so that they will hold the door in the machine.
5) Tighten all of the bolts.

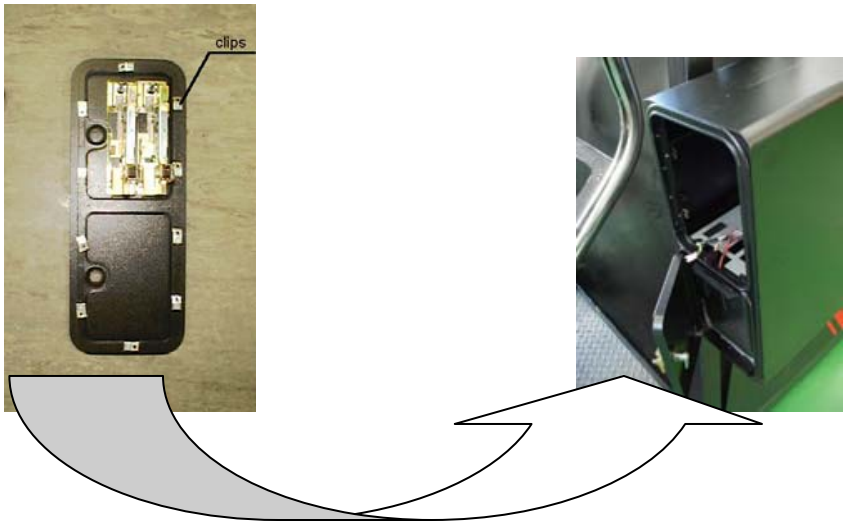

5.9.1 WIRING CONNECTION

1) Route the bundle of cables into the coin chute tower.

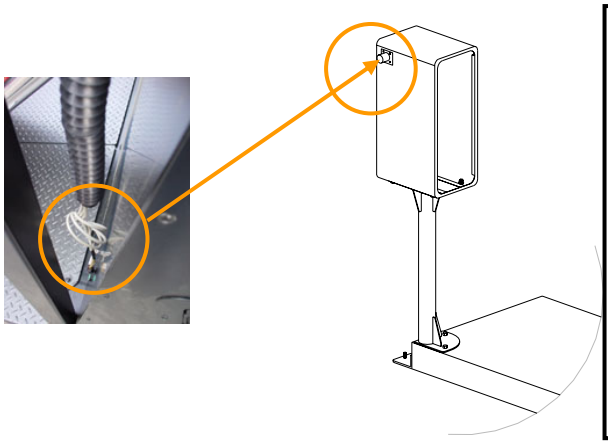

Insert the cables through this hole and secure the end of bellows with truss M4 bolts and nuts attached in shipping. Please ensure to use the Rubber Bellows & cable ties supplied with the Cycraft

2) There are 4 electric connectors, the P1 (10 pins), P2 (4 pins), P3 (2 pins) and P4 (2 pins) for Coin Validator / Bill Acceptor & Coin Meter interfacing to the Sega I/O circuit. The pin assignments for each connector are:

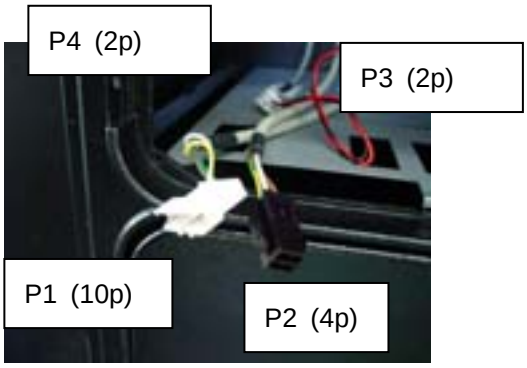

<u>P1 (10 pins White plug : for coin validator)</u>

1 ---------- GND (wire colour GREEN)

2 ---------- +12V (wire colour YELLOW)

7 ---------- COIN SW1 in Sega I/O BD (wire colour BROWN)

8 ---------- COIN SW2 in Sega I/O BD (wire colour WHITE)

<u>P2 (4 pins : for bill acceptor power & **12V lamp**)</u>

1---------- 110V AC(R)

2---------- 110V AC(T)

3---------- +12V (wire colour BROWN)

4---------- GND (wire colour WHITE)

<u>P3 (2 pins : for coin meter for chute #1)</u> {always **ACTIVE** with Electronic Mech}

1---------- COIN METER 1 for Sega I/O BD (wire colour BROWN)

2---------- +5V (wire colour WHITE)

<u>P4 (2 pins : for coin meter for chute #2)</u> {SPARE meter connection}

1---------- COIN METER 2 for Sega I/O BD (wire colour YELLOW)

2---------- +5V (wire colour GREEN)

3) Attach the coin chute door and coin selector. Then, perform the wiring referring to the electric schematic #1 of the SCU provided in session 10.1 to determine the correct connection method.

5.10 CONNECTING THE POWER CORD

Before supplying power to the power cord, make sure that the system is properly configured inside the MSCU for your facility power supply voltage. Improper configuration can damage your system permanently.

Cycraft is designed to accept the single phase 200V, 208V, 220V, 230V, and 240 VAC, 50/60 Hz power sources to support the different electric power systems in different parts of the world. However, the system must be configured correctly for each power supply voltage by connecting an electric line to one of three available terminals inside the MSCU.

Specification of the main AC power cord (Recommended)

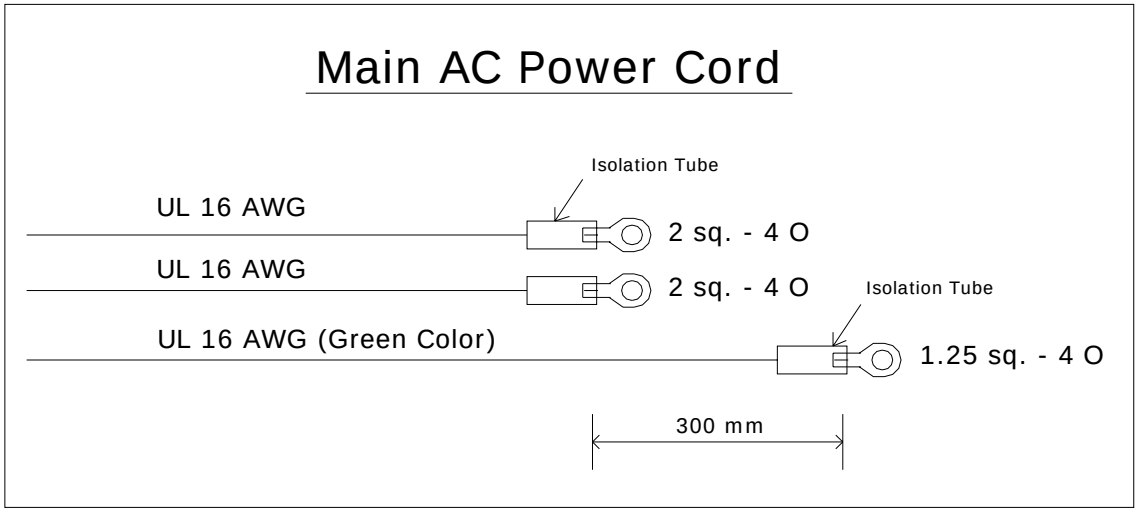

Prepare the main AC power cord compatible with above specification description.

To connect and/or verify the power cord voltage setting,

1) Open the MSCU cover in the rear of the simulator.

Before opening the MSCU cover, make sure the power line is NOT connected to the building power source and that there is no electrical power supplied to the system to prevent injury from electrical shock.

2) Locate the input voltage selection terminal block and the voltage selection wire

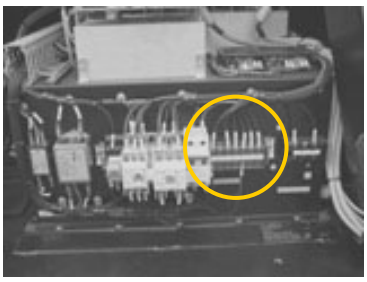

shown in the picture below.

3) Connect the voltage selection wire to the terminal that matches your facility supply voltage according to the input voltage selection terminal wiring instruction.

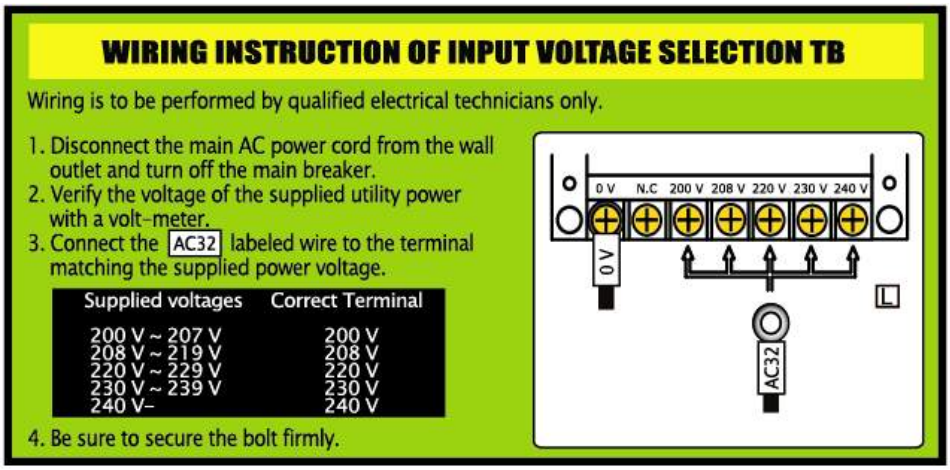

4) Locate the power cord connection terminal and connect the two power lines and the earth line of the power cord as shown below. **Make especially sure that the earth line is properly connected for safe and proper operation.**

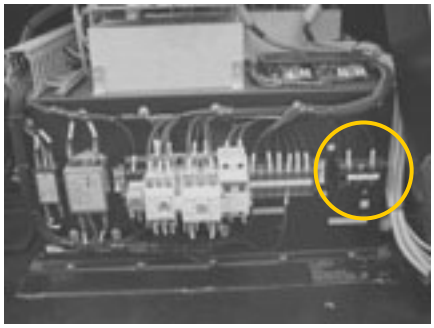

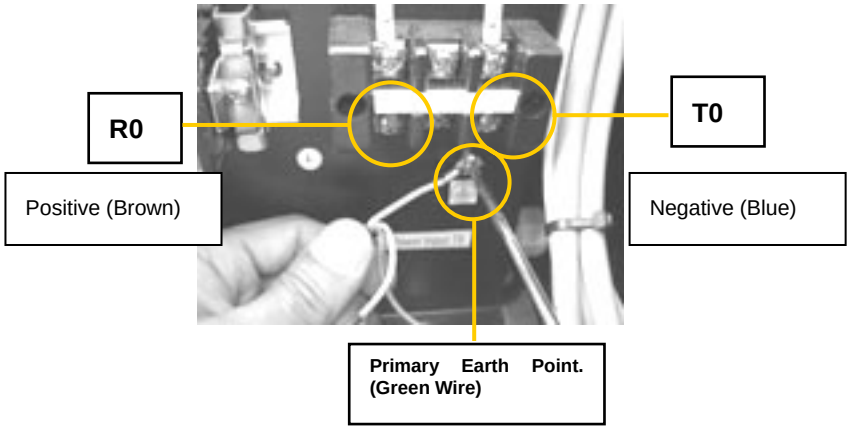

5) Verify all connections & connect power cord to the facility input voltage source.

6) Go to the Operator Panel (page 44) and verify that the red LED labeled “Main Power” is lighted. Before proceeding to start the power up sequence of Cycraft, operators should familiarize themselves with the switches and controls on the Operator Panel.

5.11 POST INSTALLATION TESTING AND INSPECTION

After the mechanical and electrical installation is complete, it is necessary to carry out a final checking procedure and make some adjustments if necessary. To carry out the final tests and adjustments, you must power UP Cycraft.

Carry out the Power-UP sequence according the procedure outlined in section 6.2. Before you power-up Cycraft, make sure of the following:

(a) The power cord is connected to the correct voltage outlet and the green main power LED is lighted.
(b) The emergency power off switch and motion stop switch (behind the coin chute box) are released.

WARNING

Make sure there are no personnel or objects under or in the area of the cabin before switching the power on. The power up sequence will move the cabin and personnel can be injured.

STOP
IMPORTANT

Make sure there are no passengers in the cabin when power is turned on. The extra weight of the passenger can cause a fault in the power ON sequence.

After successful power UP, it is possible that a beeping sound is heard and the red LED labeled “Safety Sensor” on the Operator Panel is lighted. This indicates that adjustments on the safety sensors (floor sensor and/or photo sensors) are needed. Even if the beeping sound is not made, read the following sections and verify that the sensors are in the best operating conditions.

5.11.1 TESTING AND ALIGNING THE PHOTO SENSORS

1) Make sure that the Yellow LED on top of the photo sensor is lighted when there is no obstacle between the photo sensor and the reflective mirror.
2) Tap and slightly shake the photo sensor bar and the reflective mirror bar. Make sure that small vibrations and motion of the photo sensor and the reflective plate does not cause the Yellow LED to instantaneously turn off.
3) Make sure that the Yellow LED turns off when an obstacle is placed between the sensor and reflective plate.
4) If any of the above tests fail, carry out the following to align the sensor and mirror:
   A. Remove the steel cover of the photo sensor and expose the sensor holding bracket and screws as shown below.

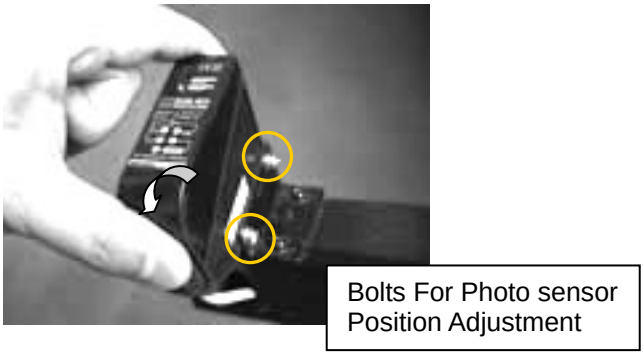

   B. Loosen the screws as necessary to align the photo sensor correctly. Adjust the reflective plate alignment by loosening the setscrews shown below.

   C. Align the reflective mirror and the photo sensor correctly by observing the Yellow LED on top of the photo sensor. Tighten all setscrews when complete.
   D. Carry out the tests described in steps 1), 2), and 3) above.

5.11.2 TESTING AND ADJUSTING THE FLOOR PRESSURE SENSOR

WARNING

NEVER go under the cabin to install or service the floor pressure sensor system when the main power is ON. Serious injury can result if the system malfunctions. If it is necessary to work under the cabin, turn the power off and support the cabin by a strong structure if it is necessary to raise it.

1) Verify that the two green floor sensor LED's on each side of the MSCU front side cover (see figure) is turned On when nothing is on top of the floor plates. If the green LED is OFF, the floor sensor system must be adjusted.
2) Verify that stepping on different parts of the floor sensor lightly turns the Green LED off. If the LED does not turn off, the floor sensor system must be adjusted (note that a 20kg weight on any part of the floor sensor must activate the sensor).
3) If any of the above tests do not pass, it is possible that the springs or sensors have been damaged or slightly bent out of shape during transport and installation. To adjust the floor sensor carry out the following steps on the floor plate section(s) that do not operate properly:
   A. Each floor plate has 4 sets of springs and switches under it. Lift the plate off to expose them.
   B. With the plate lifted, the Green floor sensor LED must be ON. If not, this indicates a defective sensor switch or wiring. Refer to the service manual for instructions on how to replace the floor sensor switch.
   C. Press each sensor lightly and verify that it clicks when pressed within its stroke. Verify operation of the Green LED.

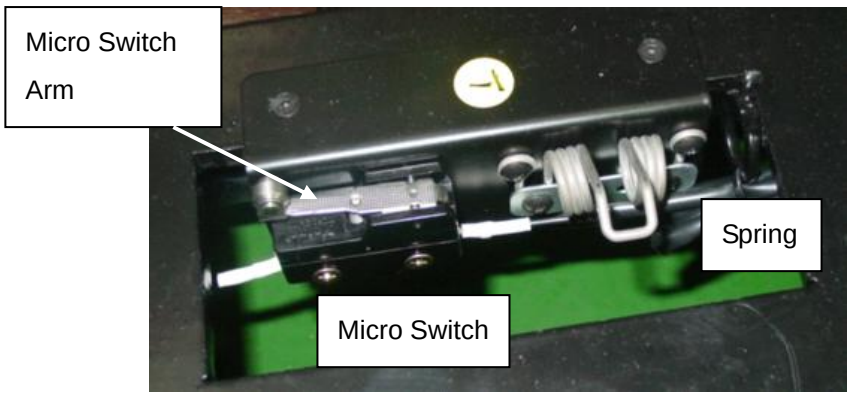

   D. The suspected switch's sensitivity can be increased or decreased by slightly b ending the sensor contact lever up or down (see figure below). Do not bend more than 1 or 2 millimeters.

E. Note that making the sensor too sensitive (i.e. bending the lever up too much) will cause the sensor to activate due to the own weight of the floor plate or make it so sensitive that slight motions or vibrations during play will trip the sensor. Making the sensor too insensitive (i.e. bending the lever down too much) will cause the sensor to not activate even when the floor plate if fully pressed down.

F. You can find the micro switch's number on the wiring diagram using the sensor arrangement figure as shown below.

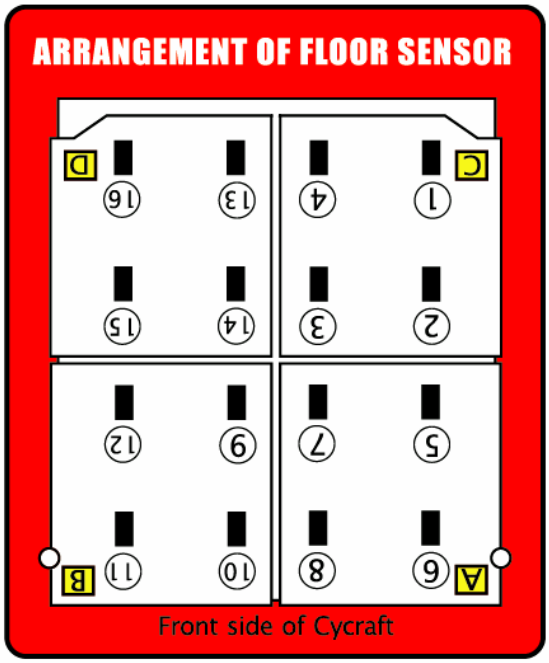

5.12 ASSEMBLING THE FENCE

1) Confirm that boarding step is fitting to the base frame of main machine with no gap to the ground and locate the 9 fence poles around Cycraft as shown.

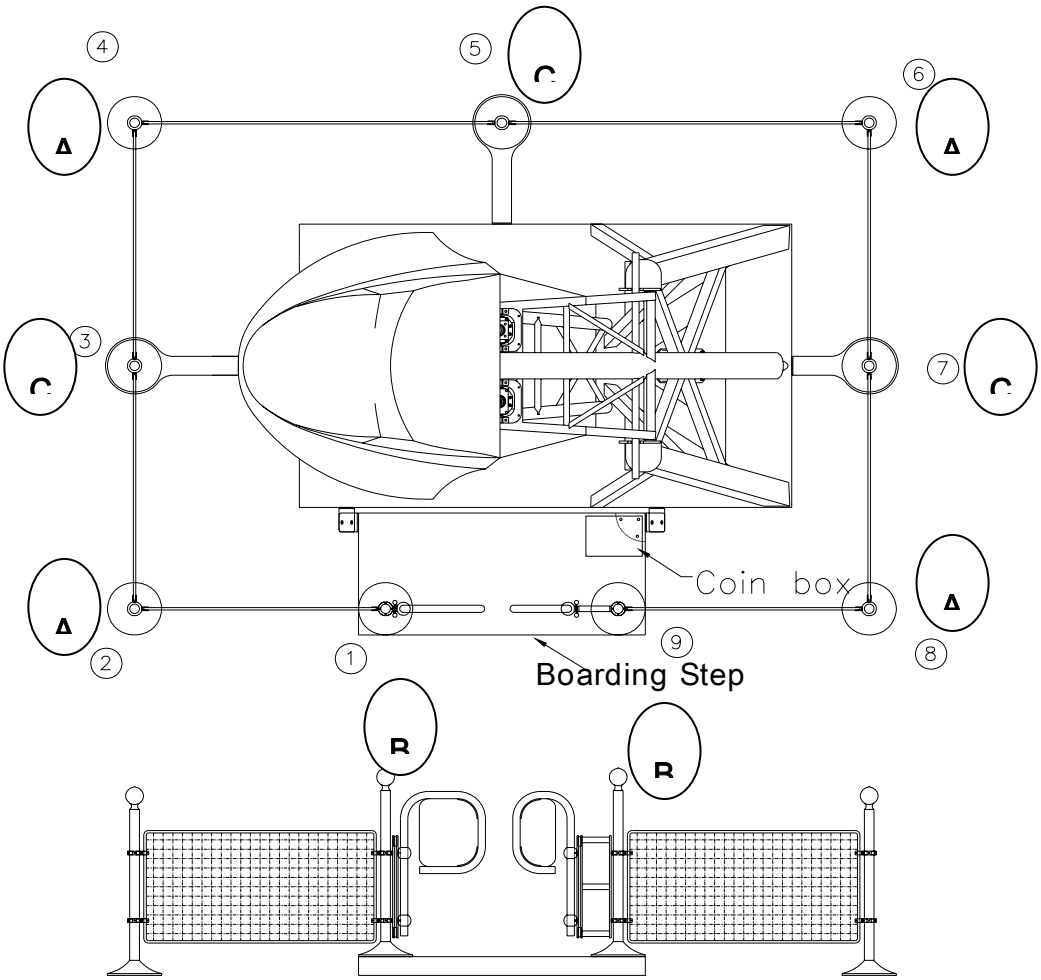

2) Assemble the pole and mesh from the pole no.1 to the pole no.9 in the order of clockwise. It is needed to be aware that there are 3 kinds of poles. Type B (no 1,9) are the gate door poles with lower the junction ring other than poles. Others are Type A. You can identify the Type Bs with the position of O-ring which is lower than that of Type As. Type C are when fitted to base plate bracket which are screwed on to the machine. Only three positions are required (no 3,5,7) No7 is the short base and no 3 is the longest base plate bracket
3) The fence U bracket assembling work is as shown below. Perform total 32 assembling of U bracket and 4 door gate bolt fixings.

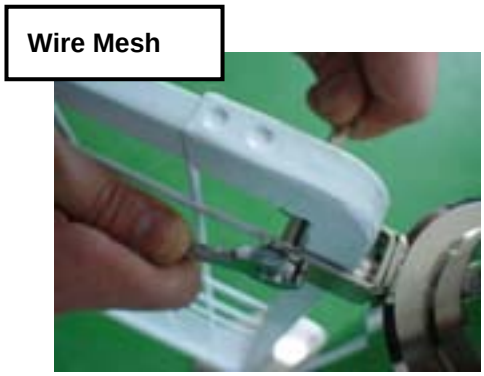

5.14 FIGURE OF CYCRAFT AFTER FINISHING THE INSTALLATION WORK

Figure of Power-ON position

6. OPERATING & ADJUSTMENT

6.1 DESCRIPTION OF INDICATORS AND SWITCHES ON THE OPERATION PANEL

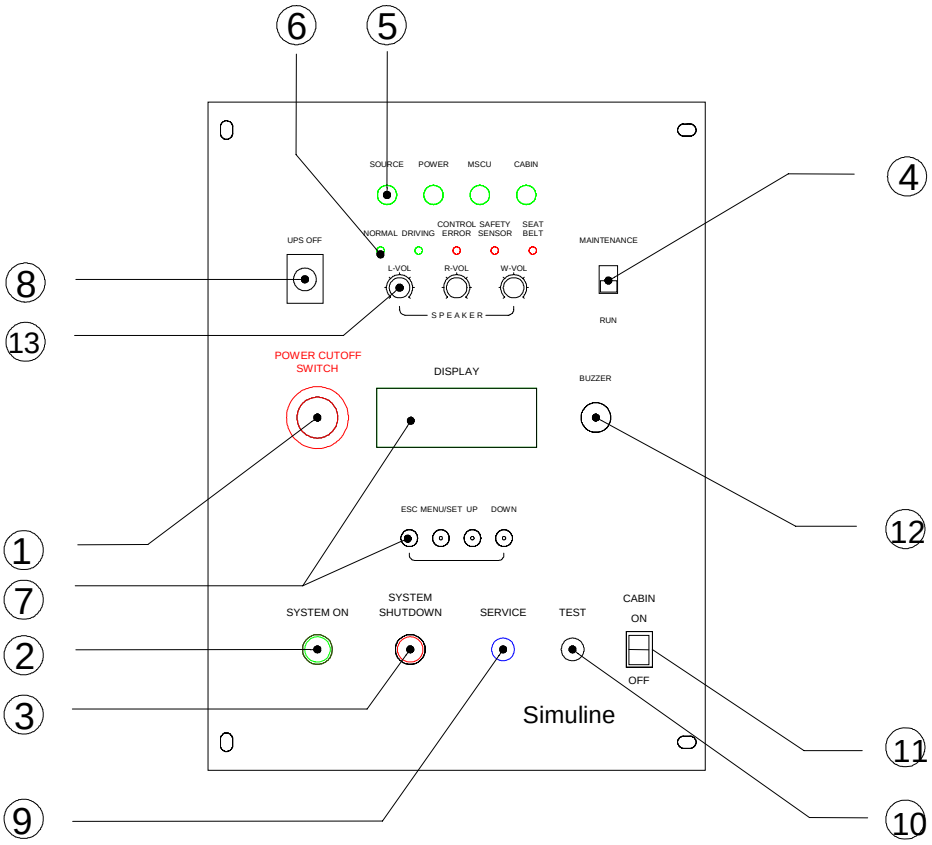

No	Item	Description
1	**Power Cutoff Switch**	This push button switch cuts off the main power to the Cycraft. It should be used in such emergency situations as when a fire breaks out in the system. Note that pressing this switch will cause the cabin to glide down to the un-powered rest position. **Therefore, the space under the cabin must be free from objects and personnel to prevent damage and injury.**
2	**System ON Button**	These buttons are used to power up the simulator norm ally. Press the buttons for 2 seconds or longer to activa te.
3	**System Shutdown B utton**	These buttons are used to power down the simulator normally. Press the buttons for 2 seconds or longer to activate
4	**Maintenance Switch**	This switch is for use by trained maintenance personnel only. The switch allows the computer systems to boot up without starting the simulator operation for special maintenance and troubleshooting purposes. This switch should always be in the down position when the simulator is being operated normally.
5	**Supply Power LEDs**	These LEDs light respectively, when the main power, power to the actuator controllers, and the cabin power are supplied.
6	**Condition LEDs**	These LEDs light according to the status of the simulator as follows: ● NORMAL LED: Lights (Green) when in normal operating condition. ● DRIVING LED: Lights (Green) when simulator is in driving condition. ● CONTROL ERROR LED: Lights (Red) when an error condition in the motion system is detected. System will automatically power down. ● SAFETY SENSOR LED: Lights (Red) when either the photo sensor or floor pressure sensor is activated. ● SEAT BELT LED: Lights (Red) when the seat belt is released during the game.
7	**Menu, Set, Up & Down, LCD Panel**	These buttons and the LCD panel are used to configure the simulator settings and show the current status of the simulator. They are explained in a separate section below in this manual.
9	**Service Button**	This button increments the credit. It has the same effec t as inserting a coin in the coin selector. But there is n o change of coin meter.

10	**Test Button**	This button is used to configure the game computer. Refer to the game computer manual for further information.
11	**Cabin Power Switch**	This switch turns on and off the power supply to the 29” monitor and speaker amp. and other components inside the Cabin. Power can be turned on only if the Main AC power is on.
12	**Buzzer**	Activates when a system error occurs or when the safety sensors are activated.
13	**Sound Volume Knobs**	Cabin interior speaker volume knobs for the front speakers, back speakers and the subwoofer.
14	**Motion Stop Switch**	Pressing the Motion Stop Switch will stop the cabin motion and hold it in its current position. Motion will resume normally 3 seconds after the switch is released. The game will continue without motion even when the switch is pressed.

6.2 TURNING THE POWER ON AND OFF

Before you power-up Cycraft, make sure of the following:

1) The power cord is connected to the correct voltage outlet and the green main power LED is lighted.
2) The power cutoff switch and motion stop switch (behind the coin chute tower) are released.

WARNING

Make sure there are no personnel or objects near or under the cabin before switching the power on in order to prevent damage and injury.

STOP
IMPORTANT

Make sure there are not passengers in the cabin when power is turned on. The extra weight of the passenger can cause a fault in the power ON sequence.

To power ON Cycraft, switch the cabin power switch ON and press the green "SYSTEM ON" button on the operator panel for about 3 seconds. The power up sequence will proceed automatically according to the following sequence:

1) The main power contacts will close with a few clicking sounds and the MCU power LED, cabin power LED, and the LCD panel will light up.
2) The monitor screen inside the cabin will show the start-up sequence of NAOMI2 or Triforce game board.
3) The cabin will pitch UP fully and slowly put itself to the horizontal initial position. Also, the steering wheel will rotate slowly to the right and left limits and then come to rest in the neutral position. Make sure the steering wheel is not obstructed during this process.
4) When the "SYSTEM ON" sequence is complete, the cabin monitor will show the game's graphics screen with the message "Insert Coin to Start".

Upon successful SYSTEM ON, the Operator Panel LED's and the LCD display will indicate as follows:

INDICATOR	Items (page 45)	CONDITION	REMARK
Power Pilot Lamps	5	All 4 lamps ON (Green)	Cycraft Sets OK
Normal LED (Green)	6-1	ON (Green)	Will turn off when driving starts
Driving LED (Green)	6-2	OFF	Will turn on when driving starts
Control Error LED (Red)	6-3	OFF	ON @ Error
Safety Sensor LED (Red)	6-4	OFF/ON	Will turn on if photo sensor or floor sensor is activated.
Seat Belt LED (Red)	6-5	OFF/ON	Will turn on if seat belt is not locked.
LCD Display	7	See below	CAN – TCP - NOR

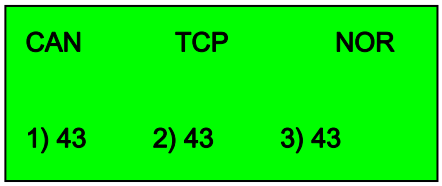

LCD Display After Power ON

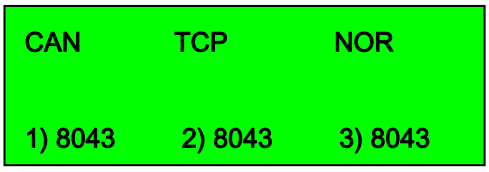

LCD Display when GAME is ON

CAN = Control Area Network
TCP = Telephony Connection Protocol or (LAN = Local Area Network)
NOR = Normal Operation (All Systems OK)

The SYSTEM SHUT DOWN Sequence can be initiated at any time by pressing the red "SYSTEM OFF" button for about 2 seconds. The cabin monitor will turn off and the cabin will glide down to the nose down rest position. Then, the main powers to the computers and other components will shut off automatically.

WARNING

Before turning off the power, MAKE SURE THERE IS NO PERSON OR OBSTACLE NEAR OR UNDER THE CABIN. The cabin will glide down upon power off and can cause serious damage or injury.

6.3 ADJUSTMENT OF THE SPEAKER VOLUMES

Cycraft has 5 speakers installed in the cabin – 2 front stereo speakers on each side of the monitor, 2 rear stereo speakers in the chair shoulder area, and 1 woofer speaker located behind the brake and accelerator pedals. Three knobs are provided on the Operator Panel to set the front, rear, and woofer speaker volumes independently.

6.4 SETTING VIDEO MONITOR PARAMETERS

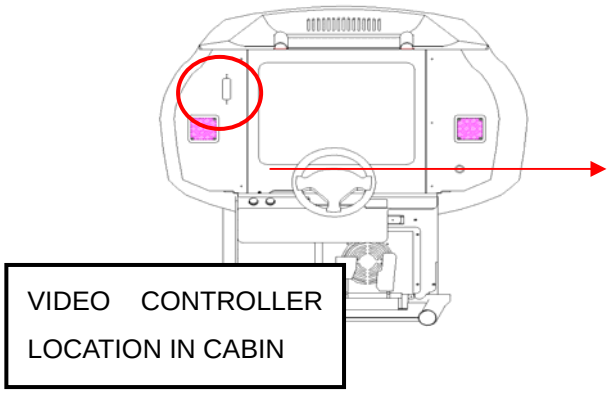

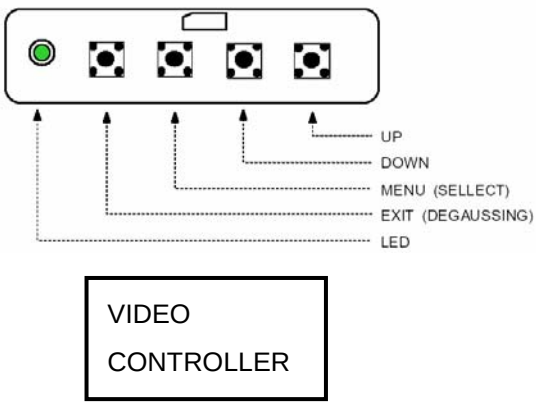

VIDEO CONTROLLER BUTTON FUNCTIONS

BUTTON	FUNCTION
MENU (SELECTION)	In the beginning, start the VIDEO controls. In a sub menu, moves the control to the higher level.
EXIT (DEGAUSSING)	In the main menu, exits the VIDEO controls.
UP	In the beginning, proceeds to the contrast adjustment. In the main menu, moves the control menu to the right. In a sub menu, increase the adjustment.
DOWN	In the main menu, moves the control menu to the left. In a sub menu, decrease the adjustment

.

VIDEO Control Menu Set

1.BRIGHTNESS
2.CONTARST
3.H-POSITION
4.H-SIZE
5.V-POSITION
6.V-SIZE
7.SIDE-PINCUSHIN
8.PIN-BALANCE
9.TRAPEZOIDE
10.PARALOGRAM
11.ROTATION
12.TOP-CORNER
13.BOTTOM-CORN
ER
14.H-MOIRE
15.V-MOIRE
16.LANGUAIGE
17.COLOR-TEMP
18.DEGAUSSING
19.RECALL
20.ZOOM

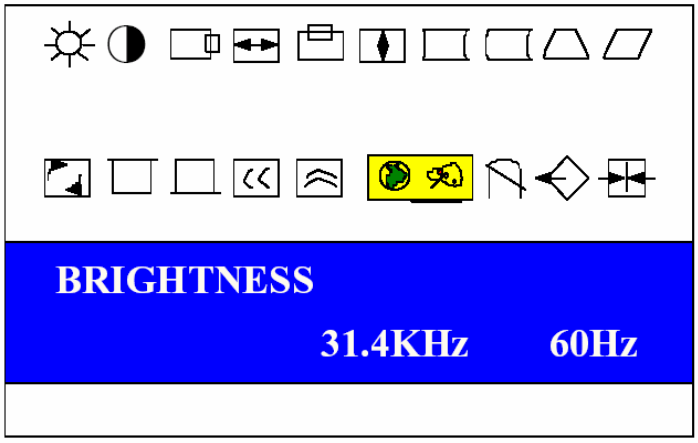

The brightness, contrast, color, alignment, sharpness, and degaussing settings for the cabin graphics monitor can be adjusted by using the monitor setting panel located in the upper left had side of the front monitor panel. To access the panel, first remove the two screws on the panel cover. Instructions for adjustment will display on the monitor during the adjustment process.

6.5 USING THE LCD PANEL TO SET CONFIGURATIONS

The LCD display and the 4 buttons below it inside the Operator Panel can be used to set different configurations. Operation method and functions of the LCD buttons are as described in the table below.

BUTTON	FUNCTION
ESC	Returns the menu to the upper level
MENU/SET	When pressed for 1 seconds the first time, it puts the display in the setting mode and brings up the configuration main menu. Once inside the setting mode, it will set the highlighted menu item.
UP	Highlights the upper menu item.
DOWN	Highlights the lower menu item.

```
[MAINTENANCE MODE ]
=>1. DIOTEST
   2. MOTION TEST
   3. SETUP TCP/IP
   4. SENSOR USAGE
   5. STATISTICS
   6. MOTION LEVEL
   7. FALLING DETECT
   8. EXIT
```

Configuration of LCD Main Menu

All settings through the LCD panel can be made only when the system is powered up in the "**maintenance mode**". This mode is entered by first putting the **Maintenance Switch in the operation panel** in the "Maintenance" position and powering up the system. After the maintenance mode is entered, configuration and settings can be made as described in the following sub-sections.

6.5.1 SETTING THE SAFETY SENSOR PARAMETERS

1) Bring up the configuration main menu by pressing the MENU/SET button for 2 seconds.
2) Highlight the "4. Sensor Usage" item by using the UP and DOWN buttons. The highlighted item is indicated by the "=>" sign.
3) Press MENU/SET button to bring up the Sensor Usage sub-menu.

```
=>  1. Safety sensor
    2. Seat belt
    3. Motion stop
    4. Exit
```

Sensor Usage Sub-Menu

Each of the items in the above list can be enabled or disabled. For example, to disable the floor and photo sensors, highlight item 1, press the MENU/SET button, and use the UP and DOWN switches to toggle to the "OFF" setting.

4) After setting the sensor, press the ESC button to go to the previous upper level menu until the main menu is displayed.
5) Highlight "4. Exit" and press MENU/ESC for three seconds to fix the settings and exit the menu.

STOP
IMPORTANT

The safety sensors, motion stop switch and seat belt sensor should always be enabled (in the "ON" setting) during all normal situations. The feature to disable the safety settings should be used only in special situations, for example when an attendant is present near the machine, solely under the discretion and responsibility of the operator. *Simuline Inc. will not be liable for any accidents or damages resulting from operation of Cycraft with any of the safety features disabled.*

6.5.2 SETTING TCP/IP CONFIGURATION

This function allows the TCP/IP setting of the motion board to be set. The motion computer and the game computer are connected via TCP/IP. All settings are preset in the factory but for future upgrades and maintenance, it may be necessary to adjust settings.

1) Bring up the configuration main menu by pressing the MENU/SET button for 2 seconds.
2) Highlight the "3. SETUP TCP/IP" item by using the UP and DOWN buttons. The highlighted item is indicated by the "=>" sign.
3) Press MENU/SET button to bring up the TCP/IP setting sub-menu.

```
[SET TCP/IP]
=>   1. IP ADDRESS
     2. SUBNET MASK
     3. GATEWAY ADDR
     4. EXIT
```

4) Highlight and select the desired parameter and use the UP and DOWN buttons to change the values.

The following are the factory pre-set values for the Club Kart game.

IP ADDRESS : 192.168.1.1
SUBNET MASK : 255.255.255.0
GATEWAY ADDR: 192.168.1.1

6.5.3 VIEWING THE TOTAL GAME MOTIONS COUNT (STATISTICS)

The total number of games with motions accepted by Cycraft after production can be viewed by selecting the “5. Statistics” item from the configuration main menu.

6.5.4 TESTING THE DIGITAL INPUT/OUTPUT CHANNELS

The digital input/output (DIO) channels in Cycraft can be tested for functionality by using the LCD panel on the Operator Panel. To carry out DIO test,

1) Bring up the configuration main menu by pressing the MENU/SET button for 2 seconds.
2) Highlight the “1. DIO TEST” item by using the UP and DOWN buttons. The highlighted item is indicated by the “=>” sign.
3) Press MENU/SET button. This will display the first DIO channel. Pressing the UP and DOWN buttons will navigate through the different DIO items.
4) Press the MENU/SET button when the desired channel appears. If it is an input channel, the state of the channel (either ON or OFF) will appear on the screen. Proper operation can be checked by physically activating the channel and verifying that the state shown changes accordingly. If it is an output channel, the current output command will be indicated. Use the UP and DOWN arrows to change the command state and verify that the output is physically activated (i.e. lamp turns on and off).
5) When finished, press the ESC switch repeatedly until main screen appears.
6) There are 17 DIO Test items.
    - Seatbelt Sensor
    - Game Stop SW
    - Safety Sensor
    - Motion Stop SW
    - Shutdown SW
    - Keypad 1
    - Keypad 2
    - Keypad 3
    - Keypad 4
    - Maintenance SW

- LED Normal
- LED Driving
- LED Error
- LED Safety
- LED Seatbelt
- Buzzer

6.5.5 MOTION TEST

This menu item runs the motion system of Cycraft through a series of pre-recorded slow speed motion. It can be used to verify that the actuators are operating properly. **After finishing the test, you should press the shutdown SW to finalizing the test.**

6.5.6 MOTION LEVEL

This is only use for Simuline. Default factory set is 1. Do not change the value without request from Simuline.

6.5.7 FALLING DETECT

This is only use for Simuline. Default factory set is 2. Do not change the value without request from Simuline.

6.6 SETTING THE COIN AND CREDIT CONFIGURATION

The coin and credit configuration (i.e. cost per game) must be set directly on the game computer (NAOMI2) by using the “Service” and “Test” buttons on the Operator Panel. Refer to the NAOMI2 service manual for instruction on how to change the coin and credit configuration.

6.7 GAME PLAY OPERATION

STOP
IMPORTANT

The operator must make sure that all the safety features are functioning correctly before accepting passengers. ***Manufacturer shall not be held liable for damages and claims due to operation of Cycraft without all safety features operating properly.***

Make sure that all safety sensor functions are operating properly. To start the game, player must first insert the correct amount of coins, enter the cabin and put on the seat belt. The screen will then show the “Press Start Button” sign. Pressing the Start button will raise the cabin to the neutral position and the game will start, beginning from the car and course selection process.

During play, the GAME STOP button can be pressed to stop the game at any time. Players who feel nauseous from the motion or need to terminate the game for any other reason can use this button to discontinue the game and exit the simulator.

The View button is used to toggle the graphics viewpoint between the driver’s seat view and tail following view. It is recommended that players use the driver’s seat view for best virtual reality effects.

After the game is finished, the cabin will come down to the initial position and the player may exit.

7. MAINTENANCE AND REPLACEMENT

7.1 ROUTINE MAINTENANCE

STOP
IMPORTANT

Maintenance and repair shall be performed only by qualified mechanical and electrical maintenance personnel in accordance with instructions provided in the manuals.

Routine maintenance and inspection of Cycraft should be carried out to ensure safe operation and longevity of the machine. Contact your distributor or the manufacturer for any instructions beyond those given in the manuals and for any questions regarding maintenance and repair procedures.

Routine Maintenance and Frequency:

Frequency	Maintenance Activity
Daily	Verify that all the safety sensors (floor sensor, photo sensor, motion stop switch) are working properly. If any malfunction is found, repair it before accepting players.
Daily	Check the system for abnormal noise and vibrations. There should not be screeching, grinding, or rattling noises which can indicate loose bolts or abnormally rubbing of parts. If such suspected noises are heard, verify the source and repair or replace as necessary. Inspect bolts and connections and the integrity of the mechanical system as described below.
Weekly	Verify that all the bolts connecting the outer frame, actuators and cabin are not loose according to the procedure described in the next section. Tighten if necessary.
Weekly	Verify that the snap rings in each of the universal joints are lodged in their grooves correctly according to the procedure described in the next section. The snap ring must be set securely in place.
Monthly	Check all weld areas of the frame and actuator described in the next section for cracks or other damage. None is acceptable.
Monthly	Check the actuator drive belt for indication of tears, cracks, or other damage. Exchange immediately if any damage is found.
Monthly	Clean the MSCU air filters and fan.
Every 6 Months	Lubricate the actuators with grease provided by manufacturer or equivalent.
Every 18 Months	Lubricate the joints with grease provided by manufacturer or equivalent

WARNING

All inspections described below must be performed with all electrical POWER OFF. Attempting to carry out the processes with the power ON can cause serious injury to personnel due to abrupt motion and electrical shock.

7.2 INSPECTION OF CRITICAL BOLTS AND CONNECTIONS

The above figures indicate the location of critical bolts on Cycraft. These bolts hold up the cabin and can cause the cabin to drop if they come loose. They are marked with a white line after assembly so that misaligned marking lines can identify loose bolts easily.

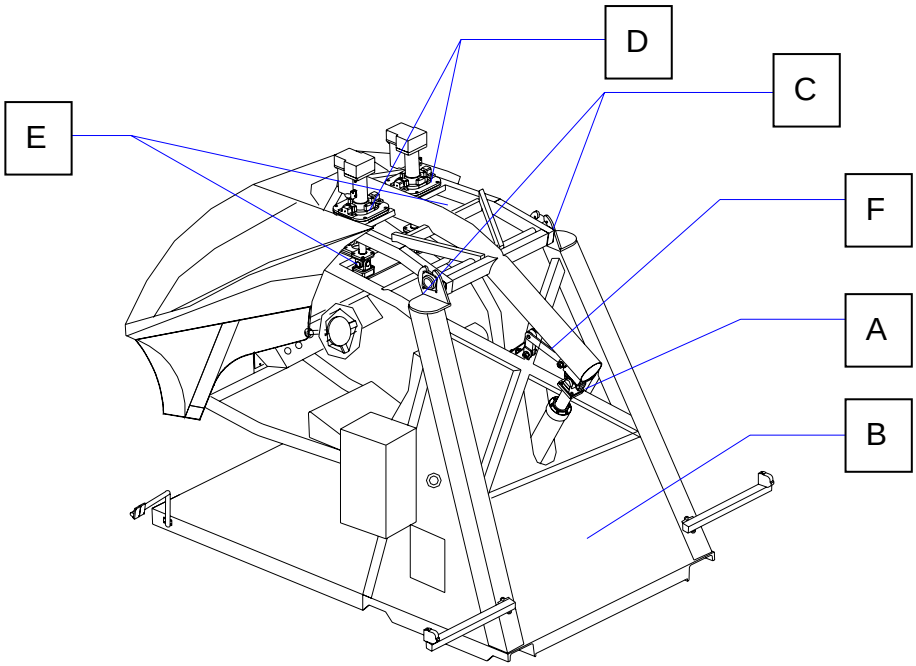

Inspection Point	Part Picture	How to check
A		Hexahead bolt M12 x 8 points
B	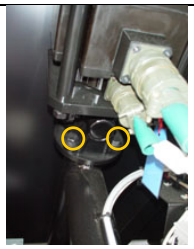	Lower joint of heave actuator is inside of MSCU so in order to inspect the bolts, the MSCU cover must be removed. Hexahead bolt M12 x 8 points
C	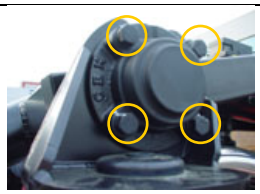	Hexahead bolt M12 x 4 points
D	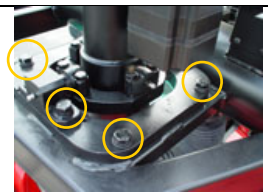	Hexahead bolt M10 x 8 points
E		Hexahead bolt M10 x 4 points (Lower) Hexahead nut M10 x 4 points (Upper)
F		

7.3 VERIFICATION OF SNAP RINGS

The universal bearings have two snap rings each which prevent the actual bearing

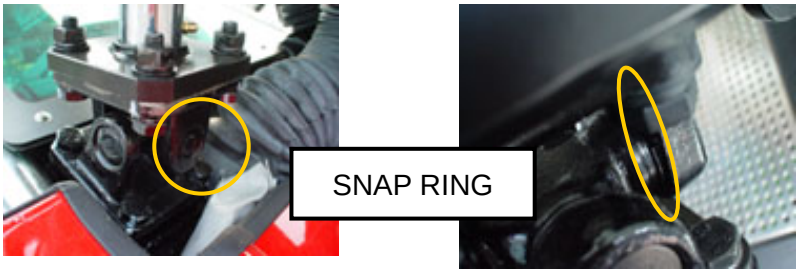

from popping out of its cage. Verify that the snap rings are lodged securely in their respective grooves. If any appear to be loose, push them back in place using a screw driver or other sharp object and check daily to make sure the problem does not repeat. If the problem persists, contact your distributor or manufacturer for a replacement part.

7.4 CHECKING WELD CONDITION

Visually check all the weld areas of the outer frame for signs of cracks or failure. None is acceptable. If any problems are found, contact your distributor or the manufacturer.

7.5 CHECKING THE ACTUATOR DRIVE BELT

The actuator drive belt can be accessed by removing the belt cover as shown in the figure below.

Visually inspect both of the belts for wear or tear. If any damage to the belt is discovered, the belt must be replaced. Check the tension of the belt. If the belt is loose, it must be tightened. The procedure to replace and tighten the belt is described in the Installation and Service manual.

7.6 CLEANING THE MSCU AIR FILTERS AND FAN

The MSCU air filters and fans are located as shown in the above figure. They should be cleaned regularly to ensure proper ventilation and prevent excessive rise in electric component temperatures. Pull out the filter cover to access the filter. Take the filter out and clean with water. Ensure the filter is dry before replacing. Clean the ventilation fan with a damp cloth.

WARNING

Make sure water does not drip into the open circuitry in the MSCU during cleaning. Permanent electrical damage can occur.

7.7 LUBRICATING THE ACTUATORS

This maintenance work should be performed every 6 months.

1) Prepare grease gun with grease specified as below or equivalent:

   KLUBER HIMONAX WS433

2) Take off the actuator bellows and bearing covers and identify the grease nipples as shown in the figure below:

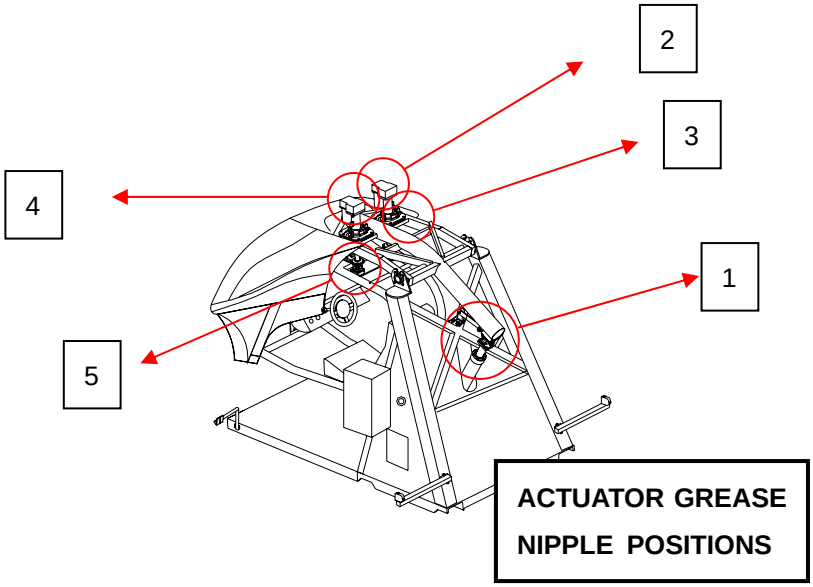

3) Inject grease in the amounts given in the table below for each of the components:

No.	Part	Picture	Amount of Grease
1	Heave Actuator Cylinder		60 grams
2,4	Top Actuators Cylinder		30 grams
3,5	Top Actuators Bearing		10 grams

4) Wipe away any excessive grease.
5) Play the game for at least three games and wipe away all excessive grease.
6) Replace all covers and bellows.

7.8 LUBRICATING THE JOINTS

This maintenance work should be performed every 18 months.

1) Prepare grease gun with grease specified as below or equivalent:
   KLUBER HIMONAX WS433
2) Identify the grease nipples as shown in the figure below.

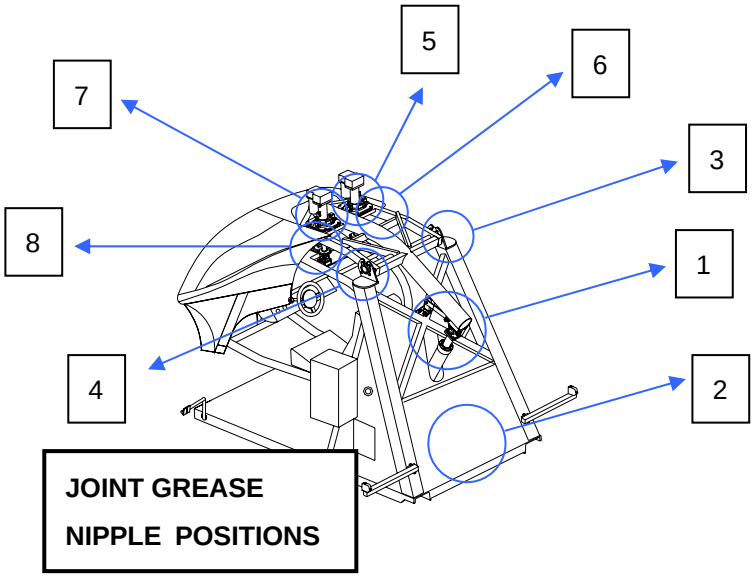

3) Inject grease in the amounts given in the table below for each of the components :

No.	Part	Picture	Amount of Grease
1	Heave Actuator Universal joint (Upper)		5 grams
2	Heave Actuator Universal Joint (Lower)	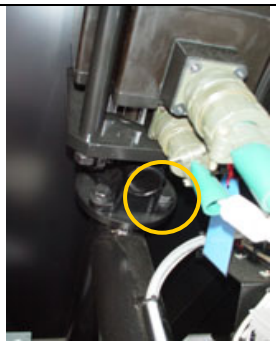	5 grams
3,4	Rocker Arm Joint		5 grams

5,6	Top Actuator Gimbal Joint		5 grams
7,8	Top Actuator Universal Joint		5 grams
9	Central Universal Joint		5 grams

4) Wipe away any excessive grease.
5) Play the game for at least three games and wipe away all excessive grease.
6) Replace all covers and bellows.

8. REPLACEMENT OF SERVICE PARTS.

STOP
IMPORTANT

Only Qualified Service Personnel must carry out maintenance. Ensure that the main power is switched OFF and disconnected before attempting any work.

8.1 EXCHANGING THE COMPACT FLASH CARD

Cycraft's motion board inside the MSCU is programmed to log any occurrence of errors with relevant system status data onto a compact flash card. In case of unidentifiable problems, it can be recommended that the compact flash card be replaced by a duplicate (provided by the distributor) and the original one be returned to the manufacturer for analysis. Or, if the operator is capable, the error log file can be accessed from the compact flash card and sent to the manufacturer by the operator. Also, future program upgrades may require exchanging the compact flash card.

To remove the compact flash card,

1) Make sure all electrical power is OFF.
2) Locate the motion control computer in the MSCU and disassemble it from the floor plate by loosening the 4 screws in the corner of the computer board as shown in the figure.

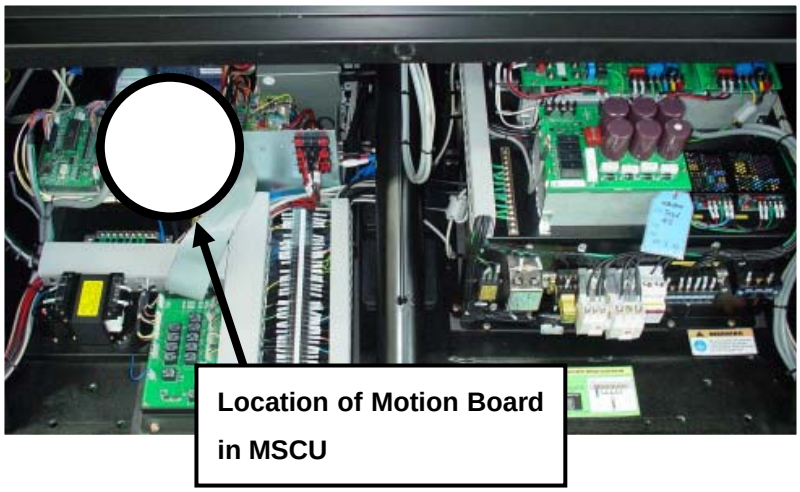

3) Expose the underside of the computer board where the compact flash card is locat ed and pull the compact flash card out.

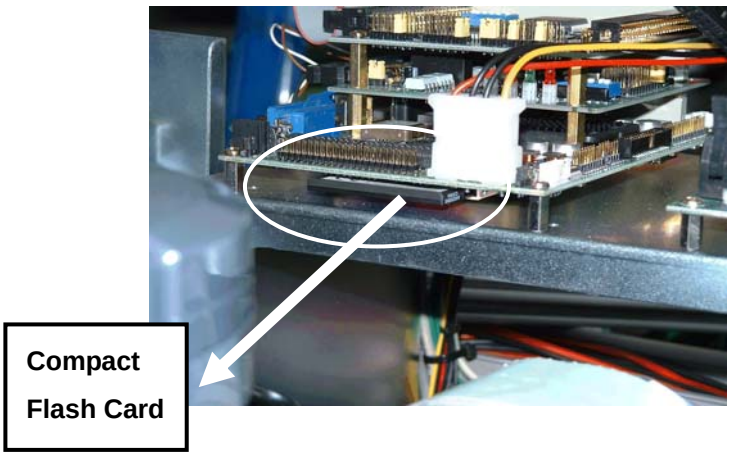

To re-install the compact flash card, follow the above process in reverse.

Once the compact flash card is removed, it can be sent to the manufacturer for analysis. Another way is to plug the compact flash card into a compact flash card reader connected to a PC and copy the file named **MCUErr.log**. This file can then be sent to the manufacturer for analysis.

Do not attempt to take out or access the compact flash card unless instructed to do so by the distributor or manufacturer.

8.2 REPLACEMENT MSCU COMPONENTS AND BOARDS

STOP
IMPORTANT

Turn off the power and disconnect the supply power before servicing. This unit is to be serviced by trained personnel only.

1) The following pictures show the location of major modules, components and boards in the MSCU. Main power must be disconnected before any part is accessed or replaced. Only qualified maintenance personnel or serviceman should carry out replacement work. Replacement procedures of components and parts are mostly straight forward. However, if any questions arise or additional information is required, contact your distributor or Simuline Inc.

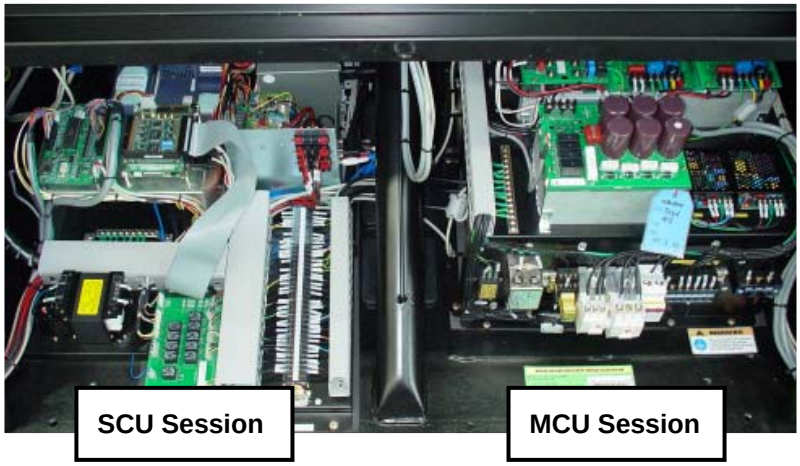
SCU Session
MCU Session

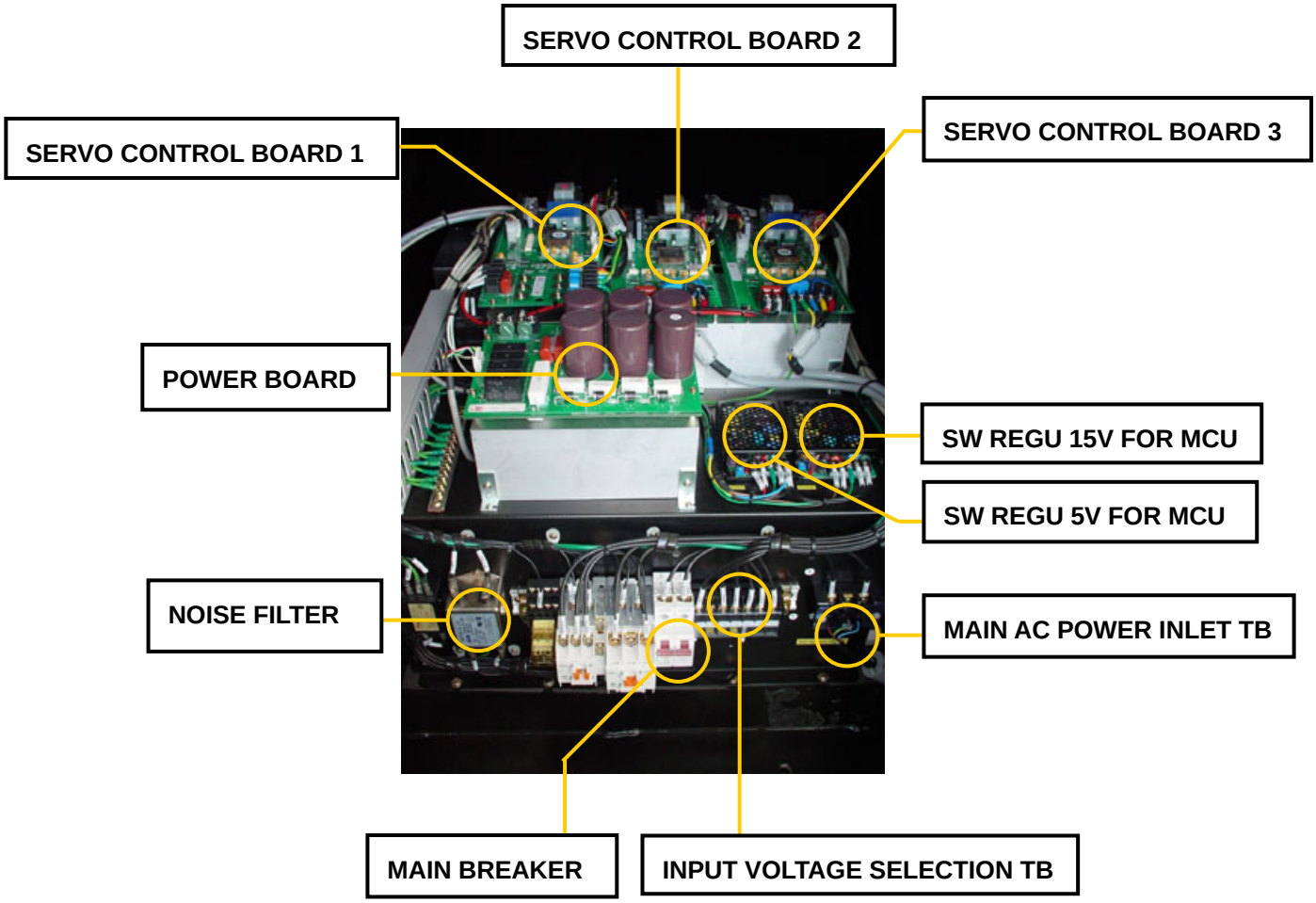
SERVO CONTROL BOARD 2
SERVO CONTROL BOARD 1
SERVO CONTROL BOARD 3
POWER BOARD
SW REGU 15V FOR MCU
SW REGU 5V FOR MCU
NOISE FILTER
MAIN AC POWER INLET TB
MAIN BREAKER
INPUT VOLTAGE SELECTION TB

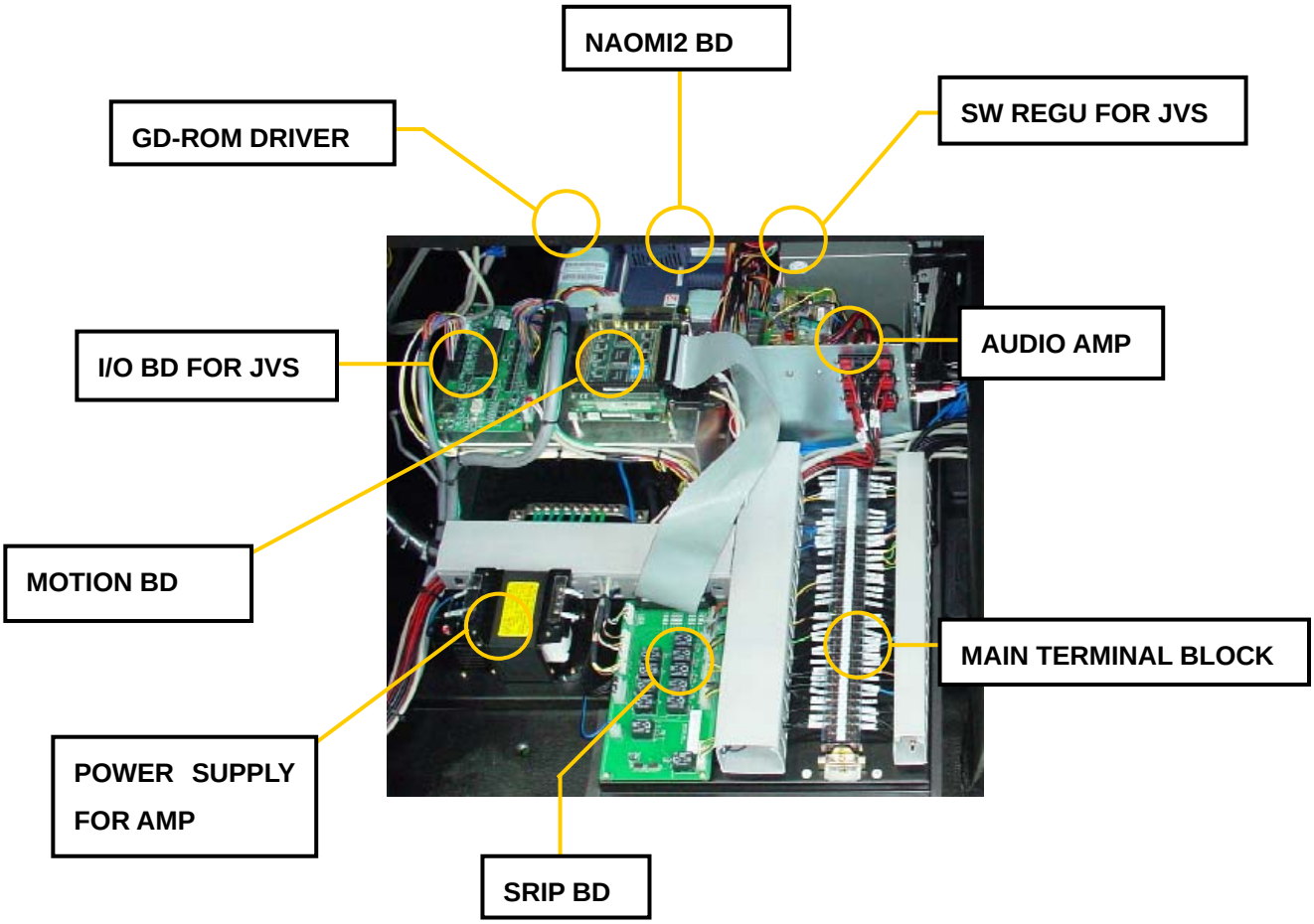
NAOMI2 BD
GD-ROM DRIVER
SW REGU FOR JVS
I/O BD FOR JVS
AUDIO AMP
MOTION BD
MAIN TERMINAL BLOCK
POWER SUPPLY FOR AMP
SRIP BD

9. TROUBLESHOOTING

9.1 TROUBLESHOOTING TABLE

No	Symptom	Probable Cause	Remedy
1	*The simulator does not move properly and the LCD screen on the MSCU front panel does not show "CAN" and it shows an error message as* **Try Can Comm ..** **Waiting host(TCP)..**	The CAN communication line from the motion board to the MCU is not working properly.	Make sure that the CAN line is plugged in correctly on both the motion board and MCU sides
2	*The simulator does not initialize or move properly and the LCD screen shows an error message as following. Also, the "Power" LED on the SCU front panel does not light up.* **ERR** **Controller Error** **(1) NOP (2)NOP(3)NOP**	Main power is not supplied because either the line is not live or because the emergency button is in the pressed position. Another probable cause may have controller error.	Check the lamp labeled "Power" on the MCU and the SCU. If the lamp on the MCU is off, check if the main power line live. If the MCU lamp is on and the SCU lamp is off, check E-Stop button is released by rotating it counterclockwise. Open the MCU box and check the circuit board was visibly damaged.
3	*During initialization, the simulator continuously jerks slightly and makes a ticking sound without initializing.*	The actuators are encountering a load too large for initialization. Either there is someone or something heavy inside the cabin or something is obstructing the motion.	Press the E-Stop button and remove whoever, or whatever is in the cabin. Power down the system and start again. If there is an obstruction, remove it.
4	*There is no sound.*	Speaker lines are disconnected or switched off or the volume is not set	Check that there are no loose connections or switched off behind the speaker.

		properly.	Rotate the volume knob on the rear of the right speaker.
5	*The LCD screen on the SCU does not show any message after power up.* *Motion base does not initialize(when initializing, cabin moves slightly with jerks).*	Motion Board boot-up failure.	Open the door on the rear of the SCU. Hook up the extra monitor, Keyboard, mouse to the connectors labeled “Motion Board”. Check if the Motion Board boots up normally. If Motion Board has problem , contact technical support center for replacement.
6	*The simulator does not initialize.*	Controller module may have malfunction	Check the error message appeared on the LCD of the SCU. Refer to the controller error message list
7	*Some area on the cabin monitor has strange color* *The display is out of position or distorted.*	The monitor may be magnetized. The monitor may not be adjusted properly.	Press the degaussing switch on the **monitor adjustment control pad** inside the cabin front beside monitor. Adjust the monitor as the screen instructions with the control panel.
8	*Sound is too loud or low* *Vibration level on the seat is too high or low*	The sound level is not adjusted properly.	Change the volume setting on the back side of the operator panel.
9	*Steering wheel turns either to the left or to the right and then locks*	The Steering potentiometer may malfunction	Contact technical support center and ask for replacement.
10	*Coins is rejected*	Coins may be jammed	Reset the machine by powering down and up.

9.2 CONTROLLER ERROR MESSAGE TABLE

MCU Error Message	Meaning	Remedy
NOP	No motor power	• Verify that the 'Emergency Power Shutoff Switch' button on the SCU is released. • Verify that circuit breaker inside the MSCU is switched off caused by an error • Check the main power source in the building.
ECD	No Encoder Signal	Check the encoder line connections to the actuators and servo controllers
FLT	Fault	• Motor controller module may have a fatal damage if this happens repeatedly. • Replace the controller module, if necessary.
OVC	Over Current	• This error occurs when excessive current flows through the controller and motor. It can occur due to the following reasons: a. the actuators are overloaded because of excessive movement. b. The actuator has a mechanical problem causing excessive friction and/or abnormal vibration. c. too much grease is put in. • Replace the controller module or actuator as deemed necessary.
OVT	Over Temperature	• This error appears when the temperature of the power module on the controller is too high. • Replace the controller module, if necessary.
OVV	Over Voltage	• This error appears when output voltage from the Rectifier on the controller exceeds the standard voltage. • Check the input voltage value. • Replace the controller module, if necessary.
BLS	Bottom Sensor Error	• The actuator is extending or retracting beyond it's normal range of motion and is tripping the Limit Sensors on the upper and bottom stroke limits of each actuator. • Verify that the sensors are functioning properly.
TLS	Top Sensor Error	

10. ELECTRIC SCHEMATICS

The following pages contain the electrical schematic for this machine.

10.1 SCU SCHEMATIC

SCHEMATIC 1 HERE

10.2 Cabin Schematic

SCHEMATIC 2 HERE

10.3 MCU Schematic

SCHEMATIC 3 HERE

[DOCUMENT END]