BLOCK DIAGRAM: Refer to schematic for parts that make up this diagram.

1. 7B
2. 1E, 1D, 3C
3. Crystal, 18.432 MHZ
4. A0 through A15 on Z80 CPU; buffered by 7D, 7E, 8D
5. D0 through D7 on Z80 CPU; buffered by 8H, 8F
6. 2114: 3H, 3F, 7N, 7P
   2101: 4F, 5F
   93425: 1N, 1P, 1R, 1S, 1T
7. All Eprom
8. 6H, 6J, 4E, 5E, 2E, 3E, 2F
9. 8D
10. 8P
11. 8N, 8M, 9N, 5R, 4R, 5S, 4S, 5P
12. 9D, 9E, 9F, 9C
13. 9R, 8R, 8S, 8T, 9J, 9M, 6T, 7T, 7S, 9L
14. 1A, 1B, 2A, 2B, 2D, 6N, 6H, 6B, 6F, 3S, 3R, 5B
15. All Eprom
16. 2H, 2J, 2K, 2L, 1U, 3L
17. 6M, 6L
18. CRT (monitor)
19. Control Panel

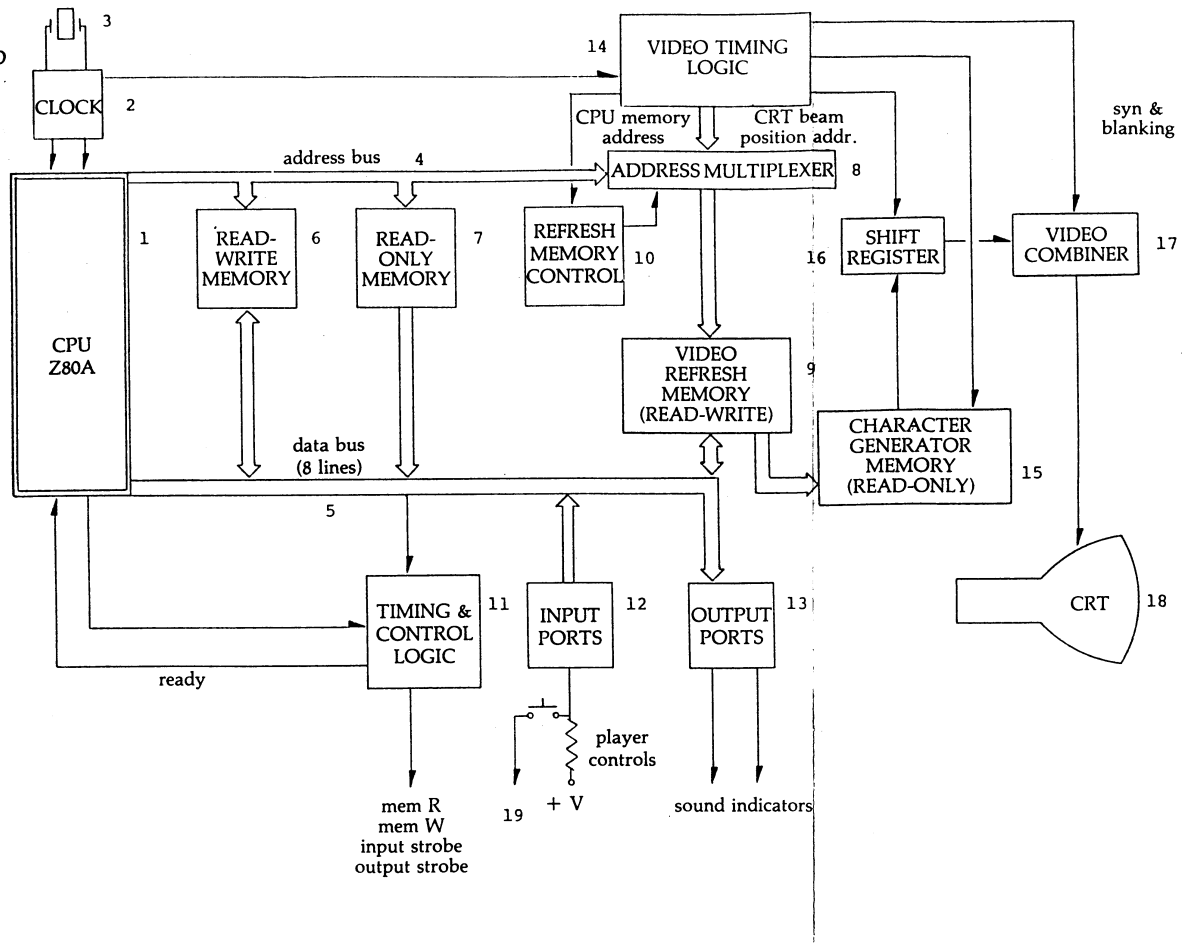

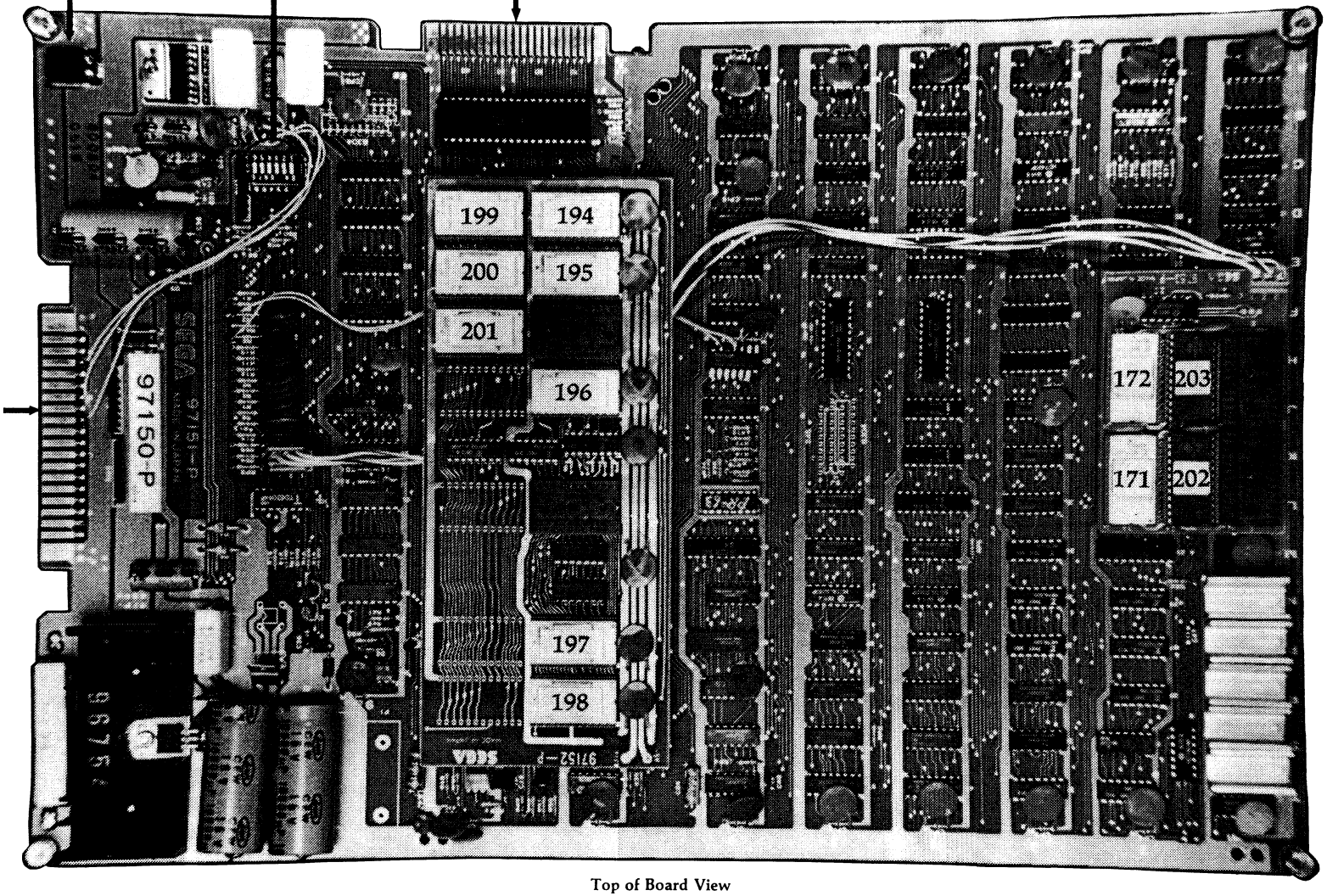

Top of Board View

REVISIONS				
ZONE	LTR	DESCRIPTION	DATE	APPROVED
	A	RELEASED SD	7-18-80	
	B	INC ECN 449	8-15-80	JEE/LASK

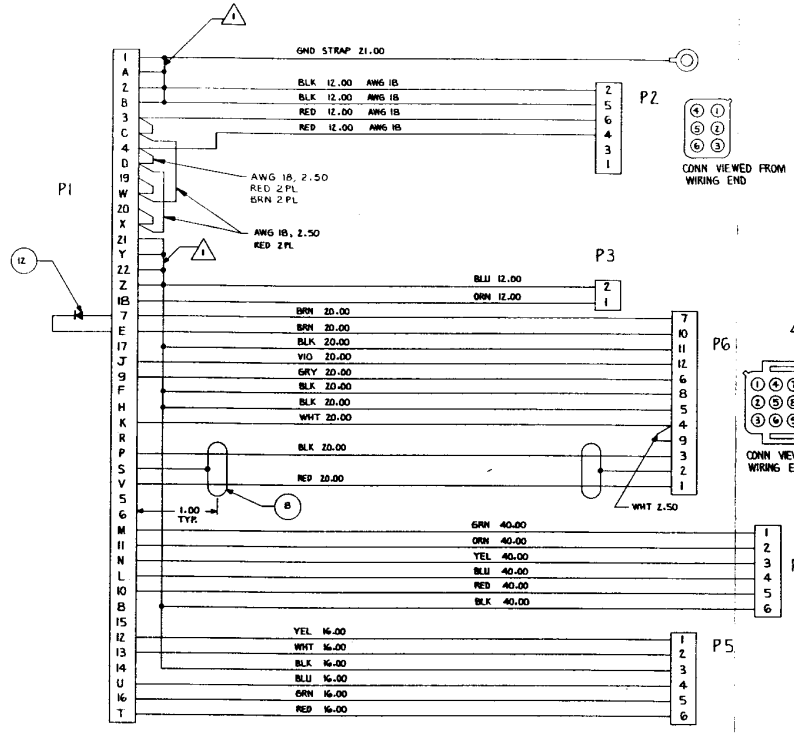

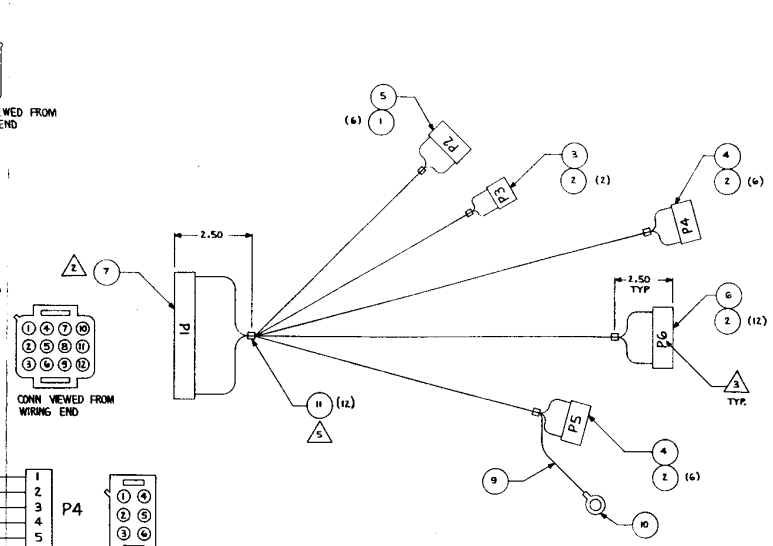

ITEM NO.	QTY REQD	CODE IDENT	PART OR IDENTIFYING NO.	NOMENCLATURE OR DESCRIPTION
12	1		481 - 0001	DIODE IN 4002
11	12		280 - 0005	CABLE TIE
10	1		211 - 0027	CONN RING LUG # 10
9	2FT		600 - 0038	WIRE BRAID FLAT 8654
8	2FT		600 - 0029	CABLE 2 COND SHIELD
7	1		211 - 0050	CONN 44 PIN CARD EDGE
6	1		211 - 0025	CONN PLUG AMP 12 PIN
5	1		211 - 0046	CONN CAP AMP 6 PIN
4	2		211 - 0045	CONN PLUG AMP 6 PIN
3	1		211 - 0043	CONN PLUG AMP 2 PIN
2	26		211 - 0042	CONN SOCKET AMP
1	4		211 - 0041	CONN PIN AMP

PARTS LIST

5. INSTALL CABLE TIES, ITEM 11, EVERY 6-8 INCHES AS REQUIRED BETWEEN LOCATIONS SHOWN.
4. ALL WIRE TO BE AWG 22 UNLESS OTHERWISE SPECIFIED.
3. MARK REF DES. ON SIDE OF CONN. HOUSING USING BLK INK, .12 HIGH CHARACTERS.
2. COVER ALL EXPOSED WIRE CONNECTIONS WHERE POSSIBLE USING 1/8 SHRINK TUBING.
1. USE SOLID BARE COPPER WIRE, AWG 18, TO BUSS CONTACTS TOGETHER.

NOTES:

UNLESS OTHERWISE SPECIFIED DIMENSIONS ARE IN INCHES TOLERANCES ARE:
FRACTIONS ± DECIMALS .XX ±.25 .XXX ± ANGLES ±

MATERIAL

FINISH

700 - 0030
NEXT ASSY | USED ON
APPLICATION

DO NOT SCALE DRAWING

CONTRACT NO.

APPROVALS	DATE
DRAWN SON DUONG	7-15-80
CHECKED	

Gremlin Industries, Inc.
San Diego, California 92123

ASSY HARNESS
MASTER M/C

SIZE D | CODE IDENT NO. | DRAWING NO. 800 - 3104 | REV. B

SCALE NONE | SHEET 1 OF 1

800 - 3104

WIRING DIAGRAM

REVISIONS				
ZONE	LTR	DESCRIPTION	DATE	APPROVED
	A	RELEASED J.M.	8-19-80	

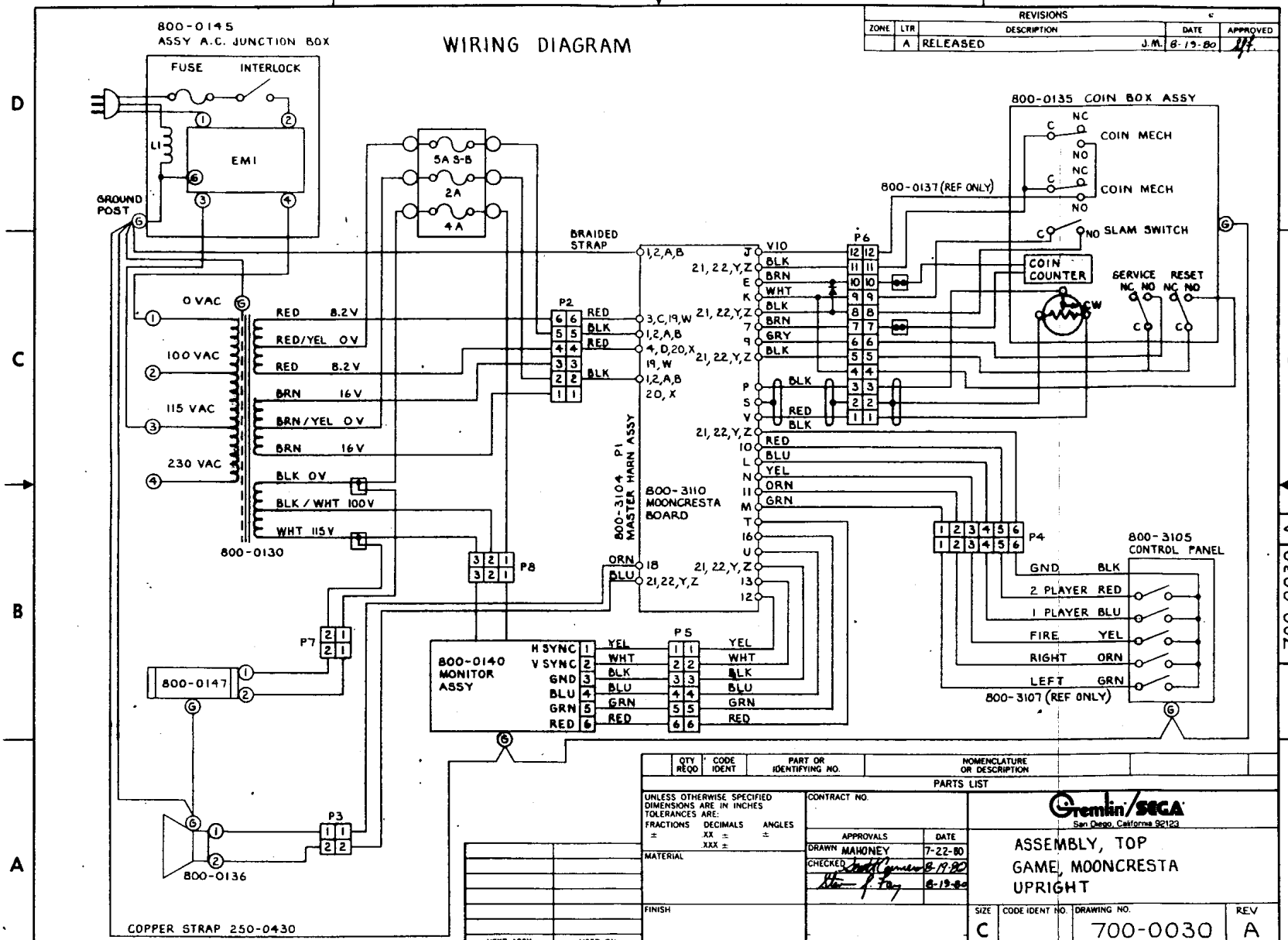

QTY REQD	CODE IDENT	PART OR IDENTIFYING NO.	NOMENCLATURE OR DESCRIPTION

PARTS LIST

UNLESS OTHERWISE SPECIFIED DIMENSIONS ARE IN INCHES
TOLERANCES ARE:
FRACTIONS ± DECIMALS .XX ± .XXX ± ANGLES ±

MATERIAL

FINISH

DO NOT SCALE DRAWING

CONTRACT NO.

APPROVALS	DATE
DRAWN MAHONEY	7-22-80
CHECKED	8-19-80
	8-19-80

Gremlin/SEGA
San Diego, California 92123

ASSEMBLY, TOP
GAME, MOONCRESTA
UPRIGHT

SIZE	CODE IDENT NO.	DRAWING NO.	REV
C		700-0030	A

SCALE NONE SHEET 7 OF 7

NEXT ASSY	USED ON
APPLICATION	

700-0030 A

REVISIONS				
ZONE	LTR	DESCRIPTION	DATE	APPROVED
	A	RELEASED SD	7-17-80	

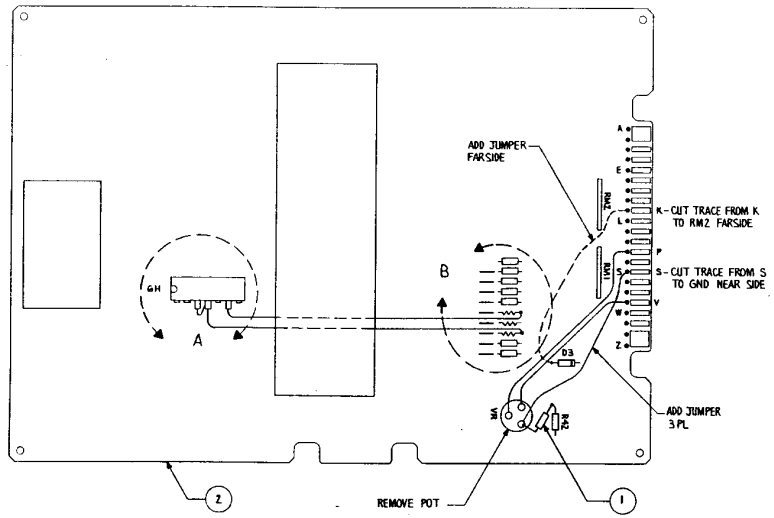

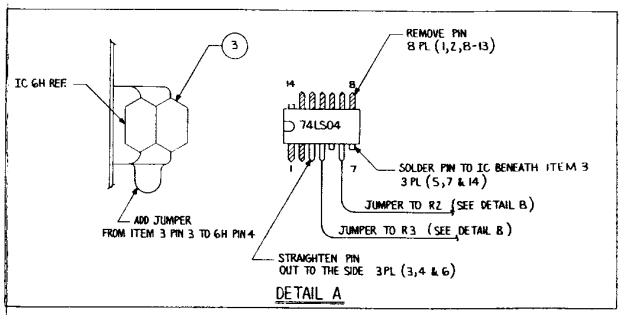

DETAIL A

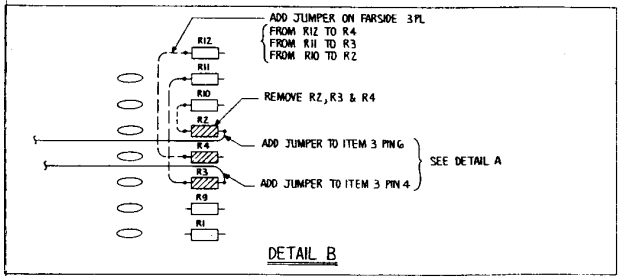

DETAIL B

ITEM NO.	QTY REQD	CODE IDENT	PART OR IDENTIFYING NO.	NOMENCLATURE OR DESCRIPTION
3	1		314 - 0019	IC 74LS04
2	1		834 - 0026	ASSY GAME ELEC. M/C
1	1		470 - 0102	RESISTOR 1K, 1/4 W, 5%

PARTS LIST

NOTES:

1. ALL JUMPER WIRE TO BE AWG 26.

NEXT ASSY	USED ON
700-0030	

APPLICATION

UNLESS OTHERWISE SPECIFIED DIMENSIONS ARE IN INCHES TOLERANCES ARE:
FRACTIONS ± DECIMALS .XX ± .XXX ± ANGLES ±

MATERIAL

FINISH

DO NOT SCALE DRAWING

CONTRACT NO.

APPROVALS		DATE
DRAWN	SON DUONG	7-17-80
CHECKED	A. AMBROSE	7-17-80

Gremlin Industries, Inc.
San Diego, California 92123

ASSY GAME ELECTRONICS
M/C MODIFIED

SIZE	CODE IDENT NO.	DRAWING NO.	REV.
D		800 - 3110	A

SCALE NONE SHEET 1 OF 1

800-3110 A

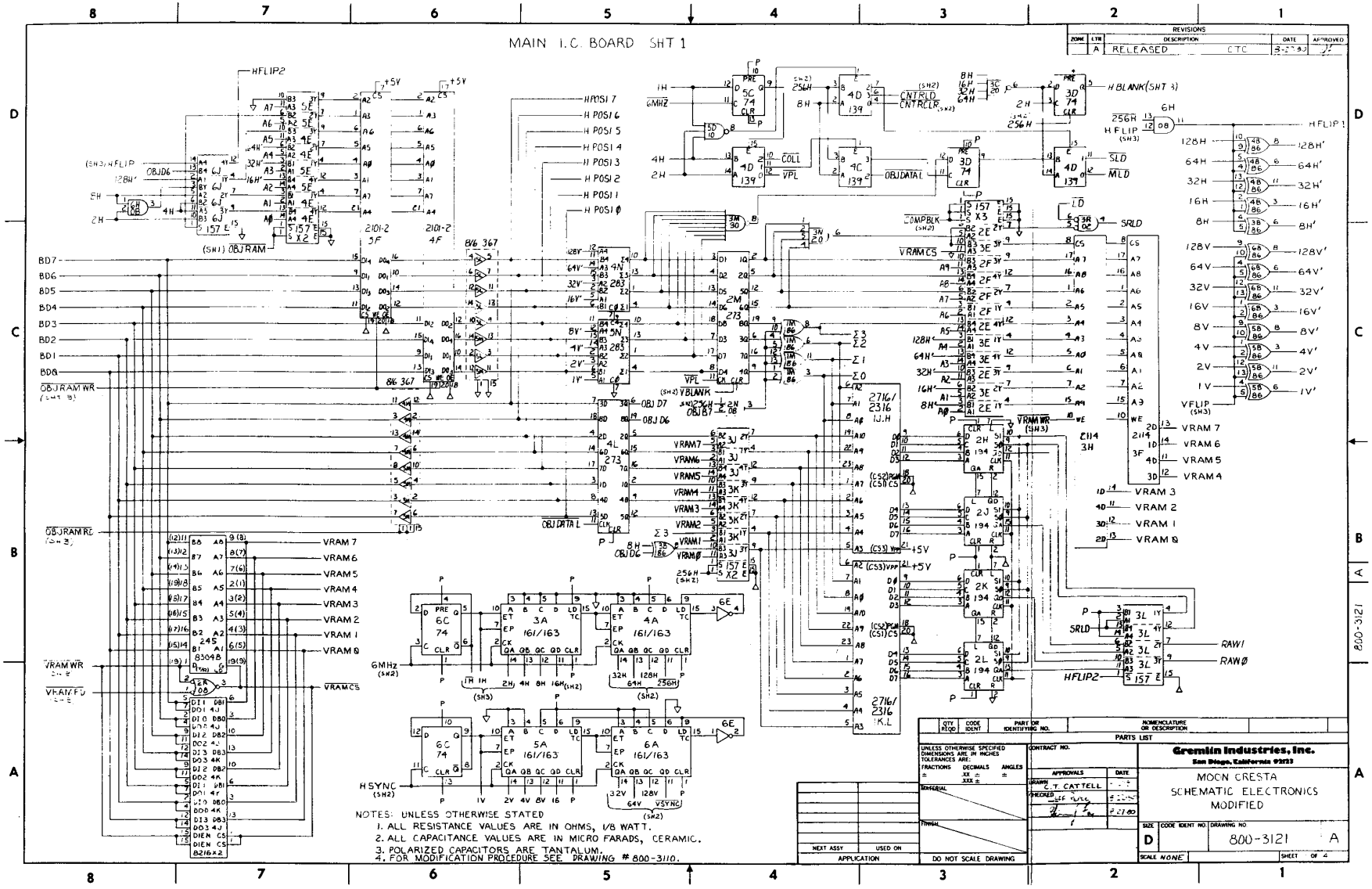
MAIN I.C. BOARD SHT 1
REVISIONS
ZONE LTR DESCRIPTION DATE APPROVED
A RELEASED CTC
NOTES: UNLESS OTHERWISE STATED
1. ALL RESISTANCE VALUES ARE IN OHMS, 1/8 WATT.
2. ALL CAPACITANCE VALUES ARE IN MICRO FARADS, CERAMIC.
3. POLARIZED CAPACITORS ARE TANTALUM.
4. FOR MODIFICATION PROCEDURE SEE DRAWING # 800-3110.
PARTS LIST
QTY REQD CODE IDENT PART OR IDENTIFYING NO. NOMENCLATURE OR DESCRIPTION
UNLESS OTHERWISE SPECIFIED DIMENSIONS ARE IN INCHES
TOLERANCES ARE:
FRACTIONS ± DECIMALS ± ANGLES ±
.XX ±
.XXX ±
MATERIAL
FINISH
NEXT ASSY USED ON
APPLICATION
DO NOT SCALE DRAWING
CONTRACT NO.
APPROVALS DATE
DRAWN C. T. CATTELL
CHECKED
Gremlin Industries, Inc.
San Diego, California 92123
MOON CRESTA
SCHEMATIC ELECTRONICS
MODIFIED
SIZE D
CODE IDENT NO.
DRAWING NO 800-3121 A
SCALE NONE
SHEET OF 4
800-3121

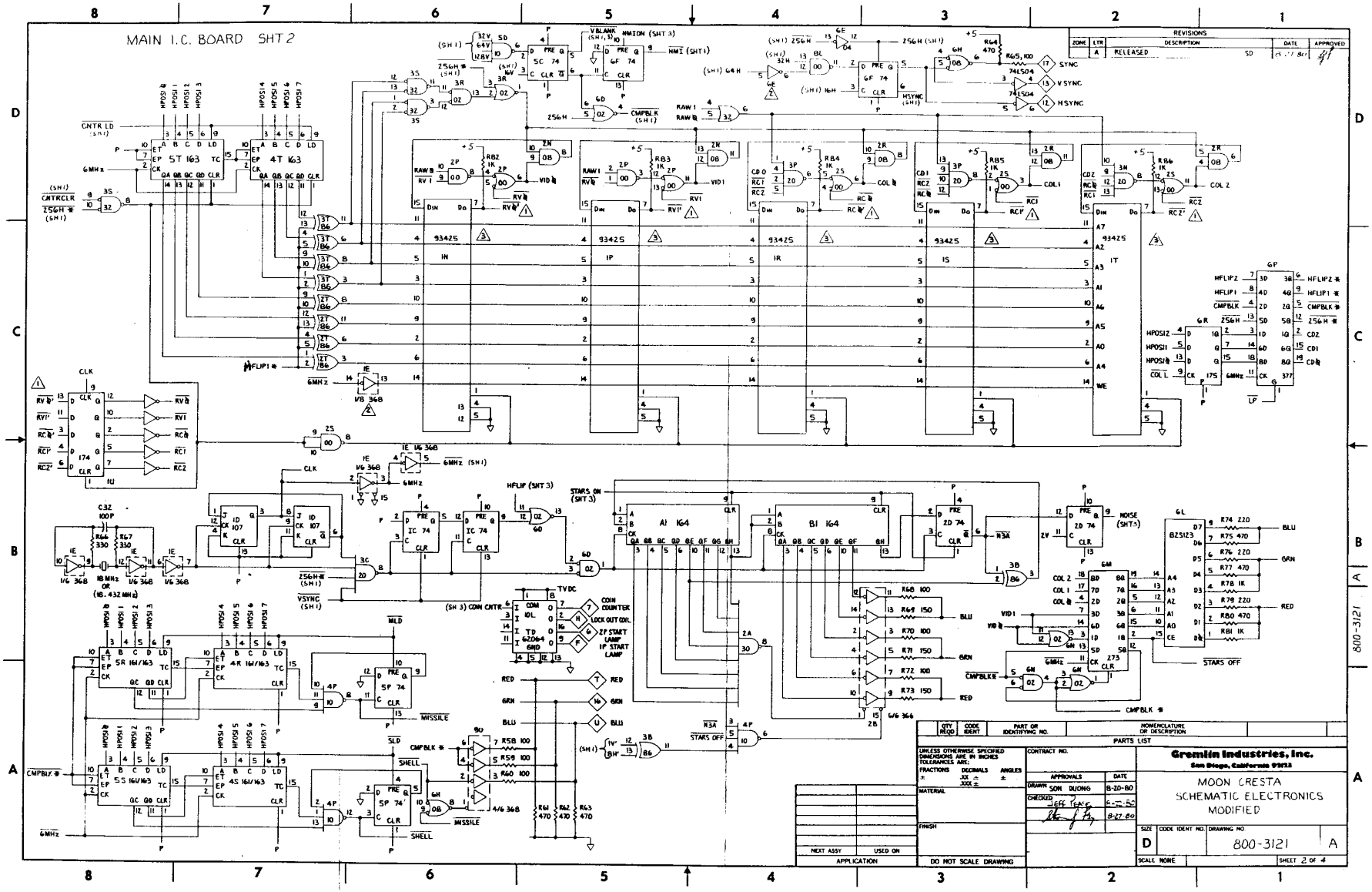
MAIN I.C. BOARD SHT 2
REVISIONS
ZONE LTR DESCRIPTION DATE APPROVED
A RELEASED SD
PARTS LIST
QTY REQD CODE IDENT. PART OR IDENTIFYING NO. NOMENCLATURE OR DESCRIPTION
UNLESS OTHERWISE SPECIFIED DIMENSIONS ARE IN INCHES TOLERANCES ARE:
FRACTIONS DECIMALS ANGLES
± .XX ± ±
.XXX ±
MATERIAL
FINISH
DO NOT SCALE DRAWING
NEXT ASSY USED ON
APPLICATION
CONTRACT NO.
APPROVALS DATE
DRAWN SON DUONG 8-20-80
CHECKED JEFF TERRY 8-27-80
Gremlin Industries, Inc.
San Diego, California 92123
MOON CRESTA
SCHEMATIC ELECTRONICS
MODIFIED
SIZE CODE IDENT NO. DRAWING NO
D 800-3121 A
SCALE NONE SHEET 2 OF 4
800-3121

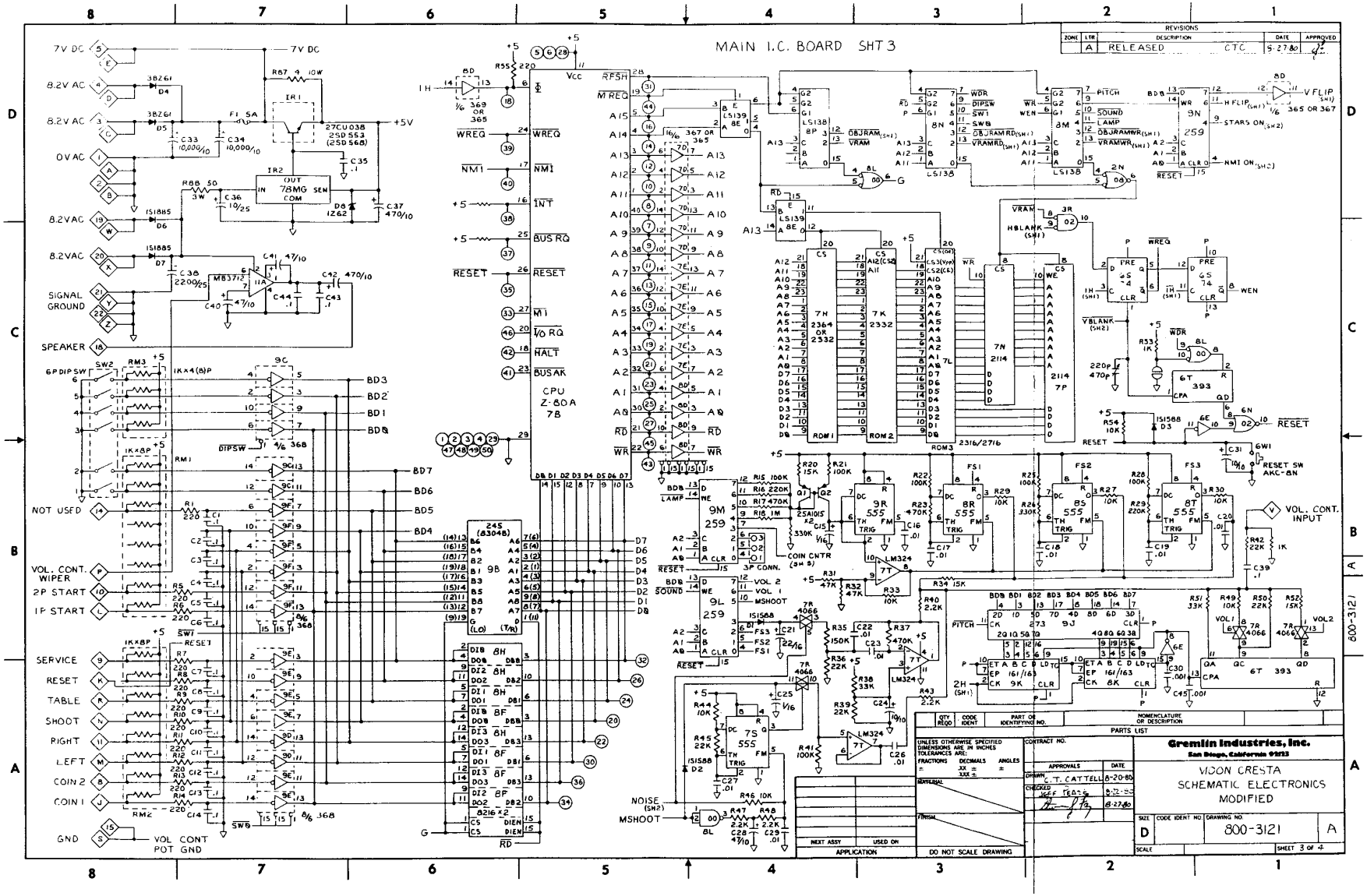
MAIN I.C. BOARD SHT 3
REVISIONS
ZONE LTR DESCRIPTION DATE APPROVED
A RELEASED CTC 5-27-80
7V DC
8.2V AC
0V AC
SIGNAL GROUND
SPEAKER
NOT USED
VOL. CONT. WIPER
2P START
1P START
SERVICE
RESET
TABLE
SHOOT
RIGHT
LEFT
COIN 2
COIN 1
GND
VOL CONT POT GND
CPU Z-80A 7B
VOL. CONT. INPUT
RESET SW AKC-8N
NOISE
MSHOOT
Gremlin Industries, Inc.
San Diego, California 92123
VIDEO CRESTA
SCHEMATIC ELECTRONICS
MODIFIED
800-3121
SHEET 3 OF 4
DO NOT SCALE DRAWING

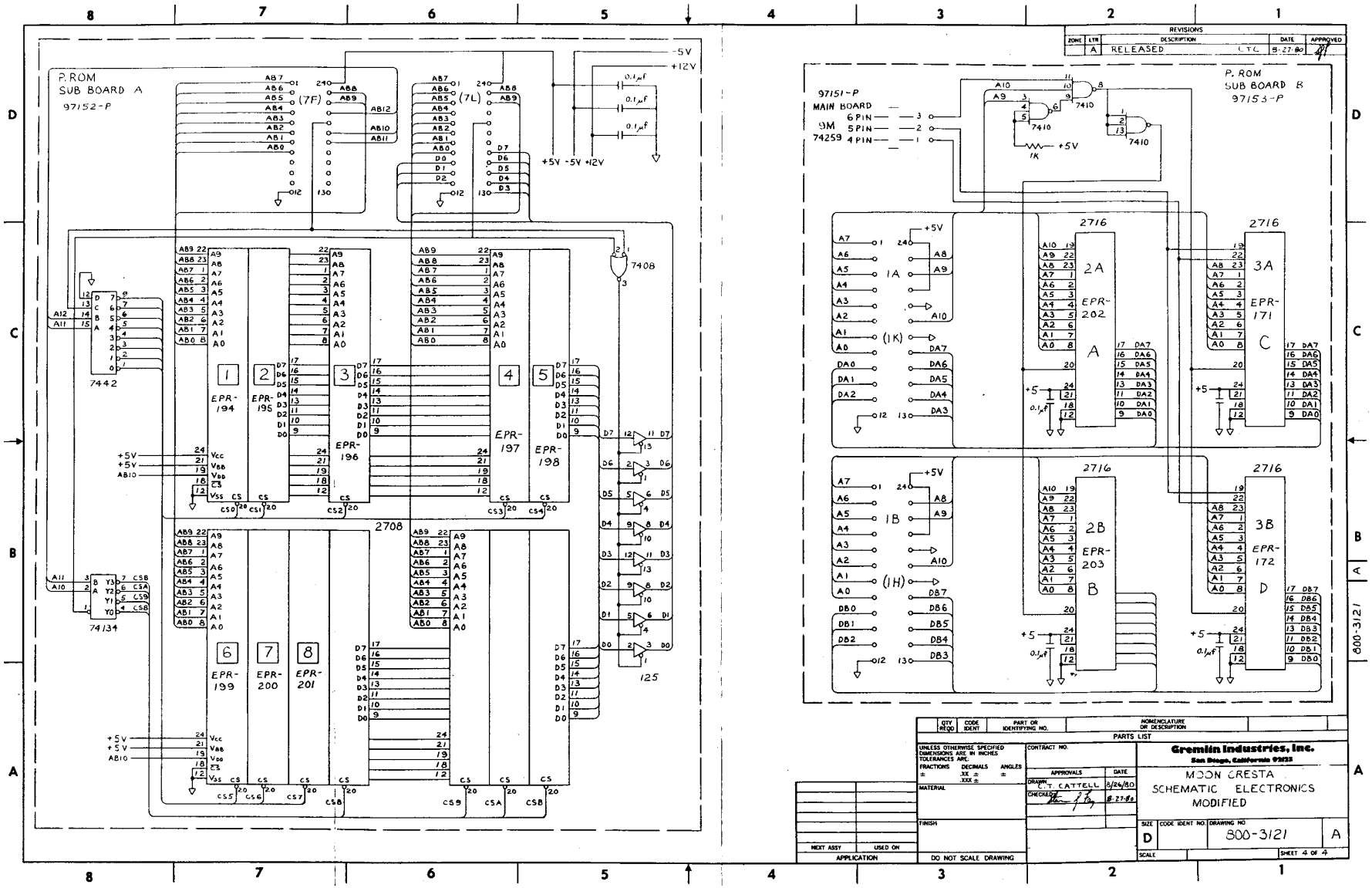
P. ROM
SUB BOARD A
97152-P
(7F)
(7L)
EPR-194
EPR-195
EPR-196
EPR-197
EPR-198
EPR-199
EPR-200
EPR-201
2708
7442
74134
7408
125
-5V
+12V
+5V -5V +12V
0.1μF
97151-P
MAIN BOARD
9M
74259
6 PIN
5 PIN
4 PIN
7410
1K
P. ROM
SUB BOARD B
97153-P
2716
2A
EPR-202
A
3A
EPR-171
C
1A
(1K)
2716
2B
EPR-203
B
3B
EPR-172
D
1B
(1H)
REVISIONS
ZONE LTR DESCRIPTION DATE APPROVED
A RELEASED CTC 8-27-80
PARTS LIST
QTY REQD CODE IDENT PART OR IDENTIFYING NO. NOMENCLATURE OR DESCRIPTION
UNLESS OTHERWISE SPECIFIED DIMENSIONS ARE IN INCHES
TOLERANCES ARE:
FRACTIONS ± DECIMALS .XX ± .XXX ± ANGLES ±
MATERIAL
FINISH
CONTRACT NO.
APPROVALS DATE
DRAWN CT CATTELL 8/26/80
CHECKED 8-27-80
NEXT ASSY USED ON
APPLICATION
DO NOT SCALE DRAWING
Gremlin Industries, Inc.
San Diego, California 92122
MOON CRESTA
SCHEMATIC ELECTRONICS
MODIFIED
SIZE D
CODE IDENT NO.
DRAWING NO. 800-3121 A
SCALE
SHEET 4 OF 4
800-3121