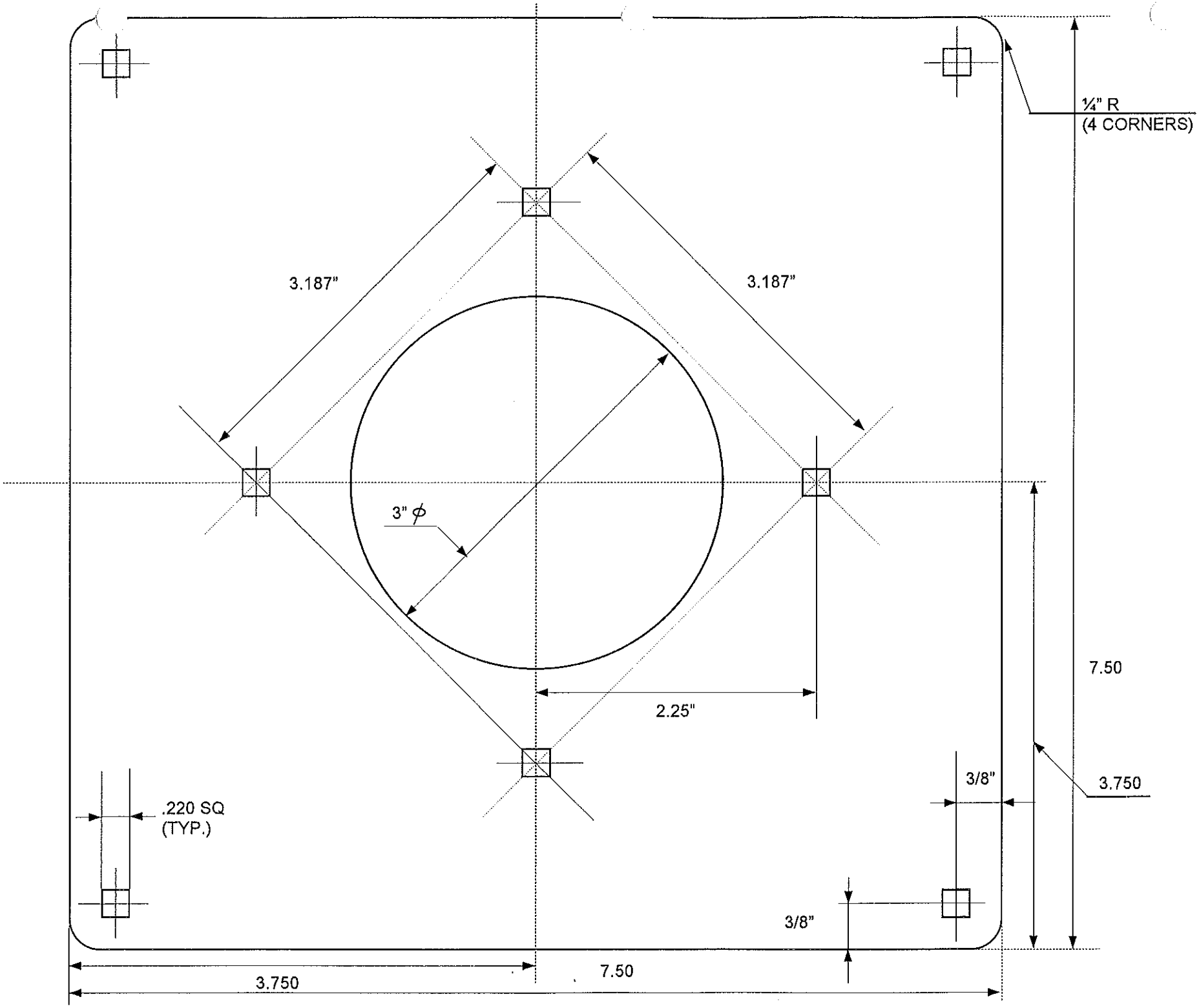
¼" R
(4 CORNERS)
3.187"
3.187"
3" ϕ
2.25"
7.50
3.750
3/8"
3/8"
.220 SQ
(TYP.)
3.750
7.50