Title: WCCF 2P

sega work instructions

Name	Richard Ford
Date	08/05/2006
Rev.	1

Apply 111 into 1 and feed as shown and secure using 258.

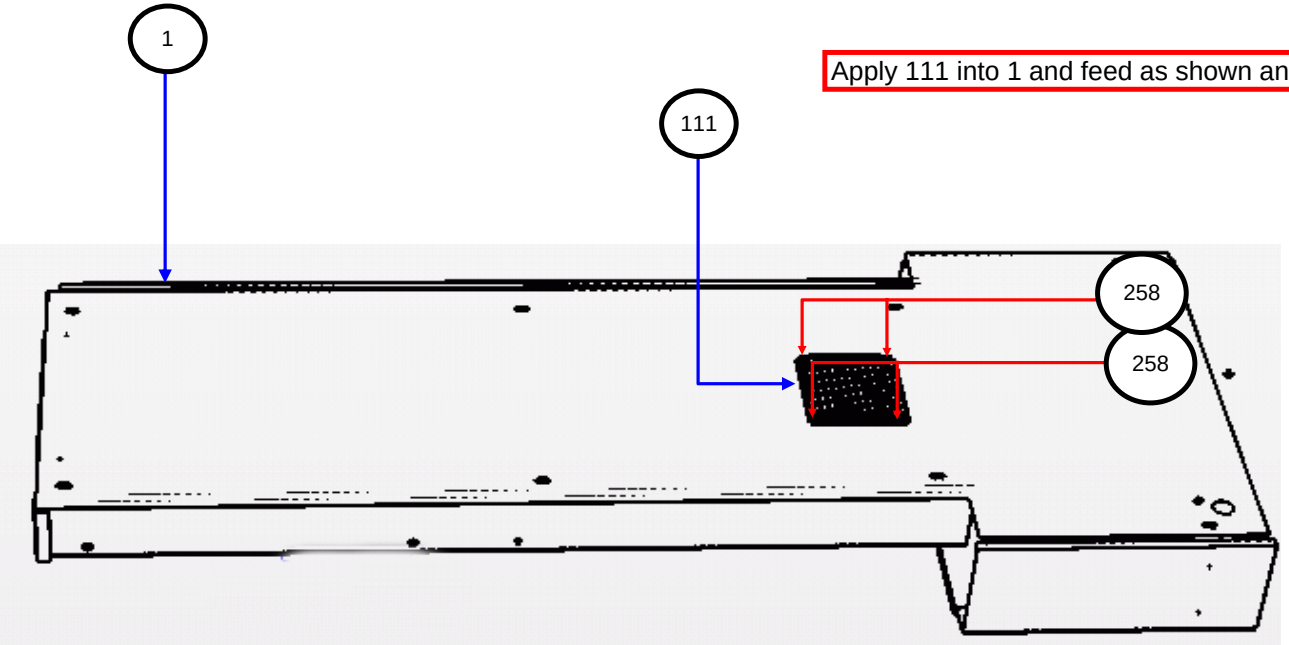

Tool List			
	PHILLIPS NO2		

Top level No	0	Level	2
Part number	0		
Description	0		
		Page	(1 / 4)

Seq.	Part number.	Description	Qty	Sub Assy	Ord	Tool	S.T
****3	FD-3020UK	ASSY BASE BOX	1				
***111	253-5460-01	AIR VENT BLACK	1				
***258	000-T00420-0B	M4X20 MSCR TH BLK	4				

Title: WCCF 2P

sega work instructions

Name	Richard Ford
Date	08/05/2006
Rev.	1

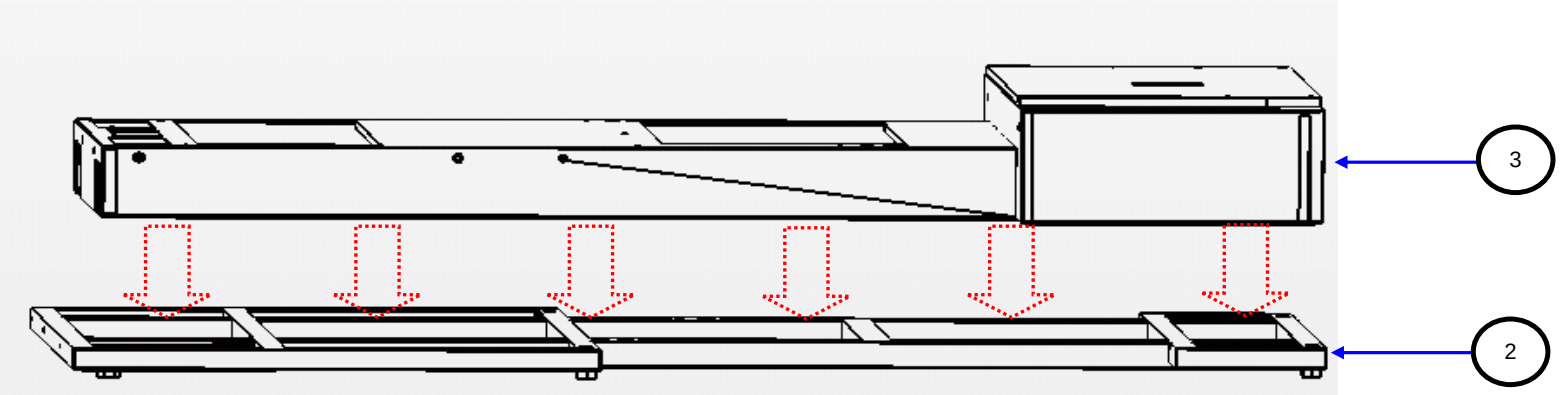

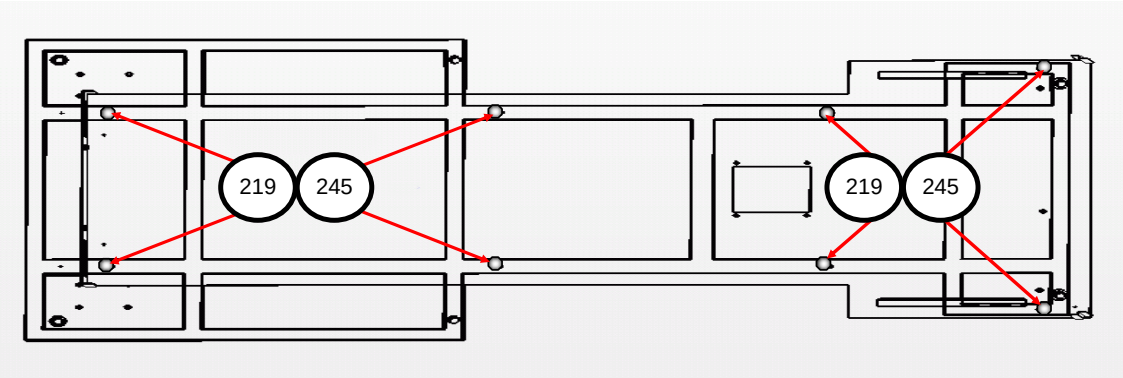

Apply 3 to 2 as shown and secure using 219&245.

Note the diagram on the left is the top view without the lid.

Tool List			
	13mm SOCKET		

Top level No	0	Level	2
Part number	0		
Description	0		
		Page	(2 / 4)

Seq.	Part number.	Description	Qty	Sub Assy	Ord	Tool	S.T
***2	ORP-3000UK	ASSY FRAME BASE	1				
***3	FD-3020UK	ASSY BASE BOX	1				
***219	060-F00800	M8 WSHR FORM A FLT	8				
***245	030-000820-S	M8X20 BLT W/S PAS	8				

Title: WCCF 2P

sega work instructions

Name	Richard Ford
Date	08/05/2006
Rev.	1

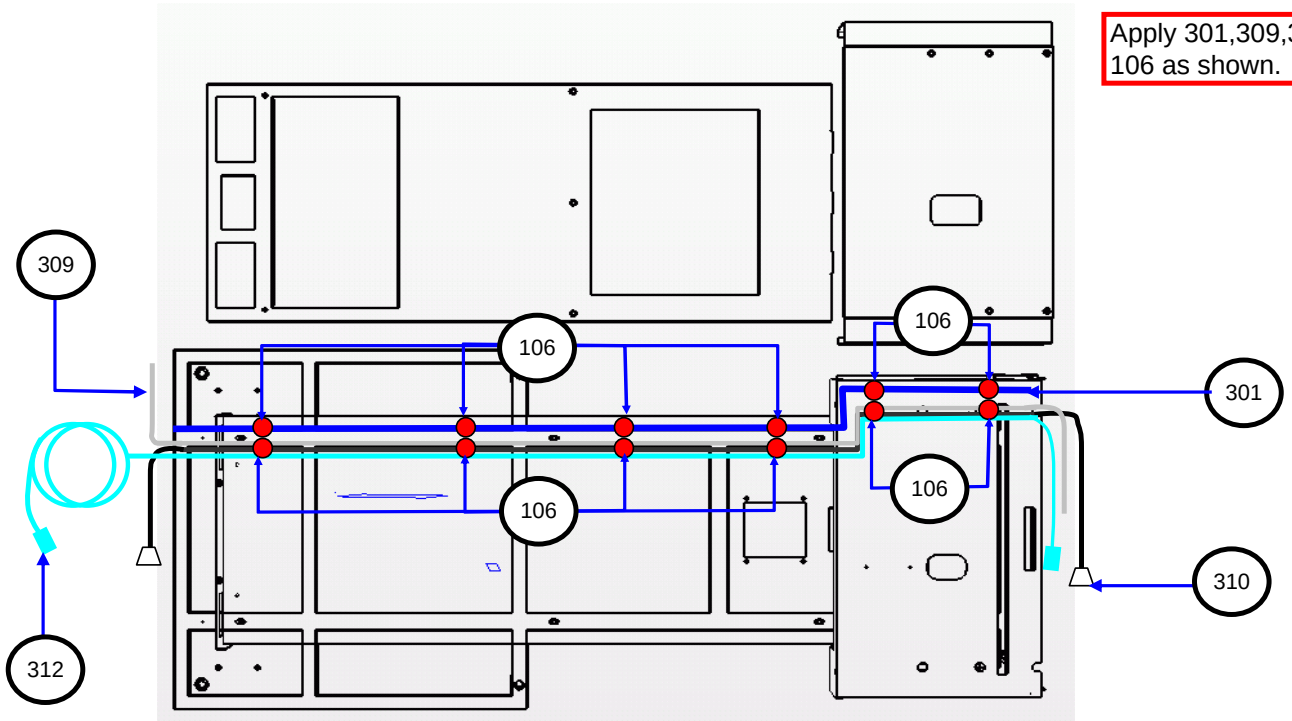

Apply 301,309,310&312 into 1 and feed through 106 as shown.

Tool List			

Top level No	0	Level	2
Part number	0		
Description	0		
		Page	(3 / 4)

Seq.	Part number.	Description	Qty	Sub Assy	Ord	Tool	S.T
***106	280-A02000-A	ROUTER TWIST D20 ADH	12				
***301	FD-6601UK	WH ASSY CABLE RUN	1				
***309	600-7141-250UK	CABLE JVS TYPE A-B 2	1				
***310	600-7009-3000Uk	ASSY RGB CA D SUB 15	1				
***312	600-7269-0500UK	CA LAN CAT5 500CM	1				

Title: WCCF 2P

sega work instructions

Name	Richard Ford
Date	08/05/2006
Rev.	1

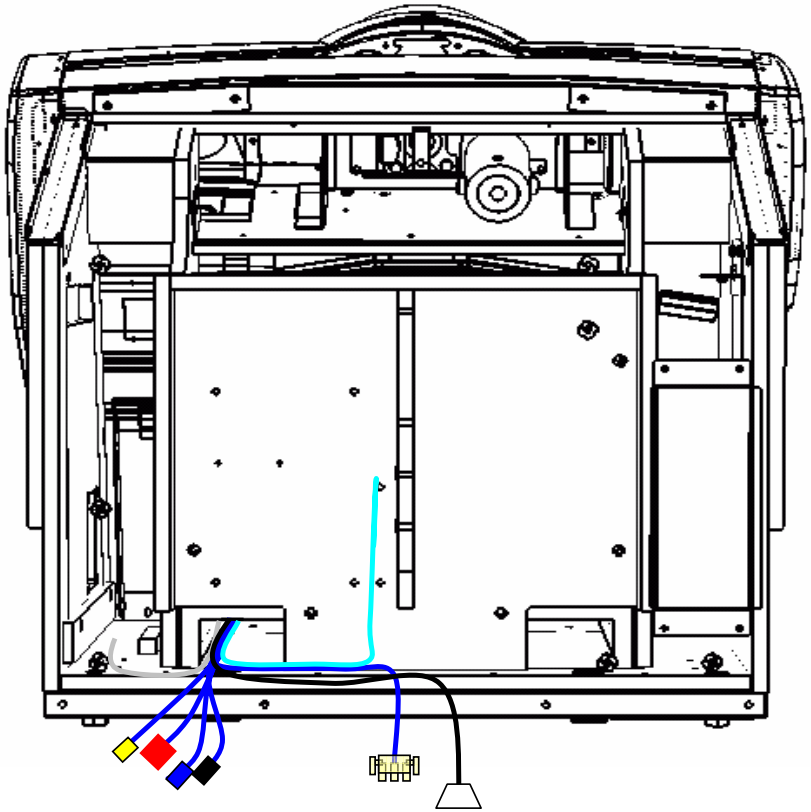

Split 301 as shown and feed to the Amp bd assy (left). Also feeding 309 to the amp bd.

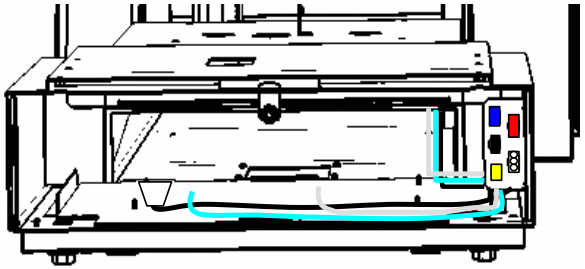

Feed the mains plug to the right along with 310&312 as shown.

Tool List			

Top level No	0	Level	2
Part number	0		
Description	0		
		Page	(4 / 4)

Seq.	Part number.	Description	Qty	Sub Assy	Ord	Tool	S.T

Title: WCCF 2P

sega work instructions

Name	Richard Ford
Date	08/05/2006
Rev.	1

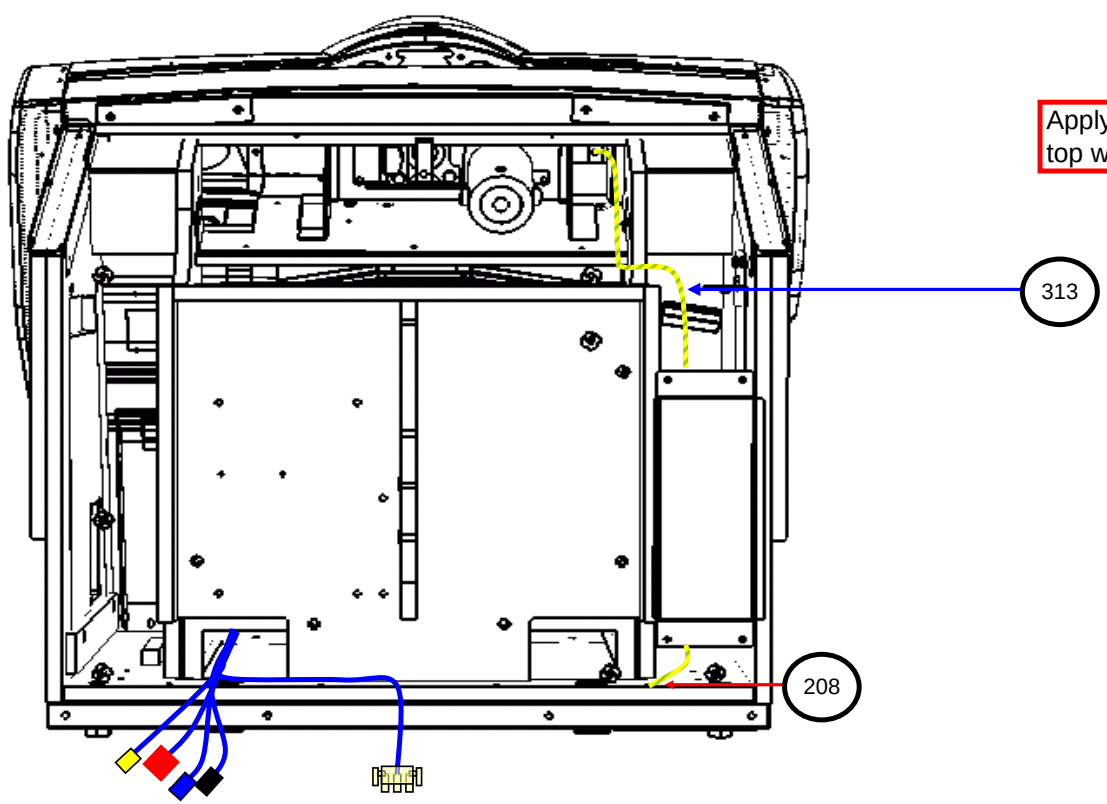

Apply 313 to locations shown secure at the top with 10mm and at the bottom with 203.

Tool List			
	10MM SOCKET	PHILLIPS NO2	

Top level No	0	Level	2
Part number	0		
Description	0		
		Page	(5 / 4)

Seq.	Part number.	Description	Qty	Sub Assy	Ord	Tool	S.T
***208	000-P00412-W	M4X12 MSCR PAN W/FS PAS	1				
***313	FD-66013UK	WH MULTI EARTH	1				

Title: WCCF 2P

sega work instructions

Name	Richard Ford
Date	08/05/2006
Rev.	1

Tool List			

Top level No	0	Level	2
Part number	0		
Description	0		
		Page	(6 / 4)

Seq.	Part number.	Description	Qty	Sub Assy	Ord	Tool	S.T

Title: FORD DX

sega work instructions

Name	Richard Ford
Date	08/05/2006
Rev.	1

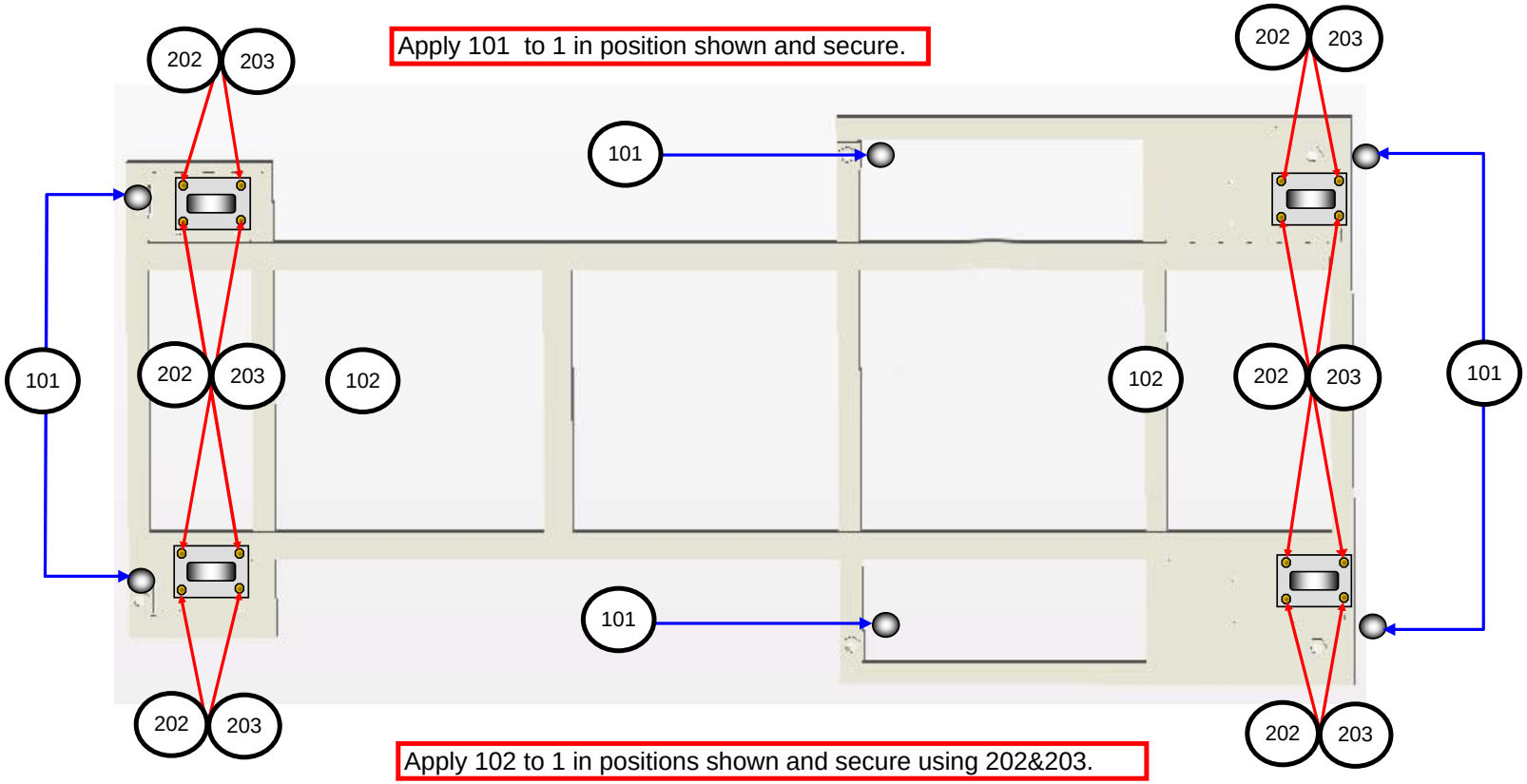

Tool List			
	10MM SOCKET	ADJ SPANNER	

Top level No	4FD-0000UK	Level	2
Part number	ORP-3000UK		
Description	ASSY FRAME BASE		
		Page	(1 / 1)

Seq.	Part number.	Description	Qty	Sub Assy	Ord	Tool	S.T
****1	ORP-3001UK	FRAME BASE	1				
****101	601-5699UK13-01	LEG ADJ M16X130 1L/NUT	6				
****102	MA1019	CASTER 75	6				
****202	030-000620-S	M6X20 BLT W/S PAS	16				
****203	060-F00600	M6 WSHR FORM A FLT PAS	16				

Title: WCCF 2P

sega work instructions

Name	Richard Ford
Date	08/05/2006
Rev.	1

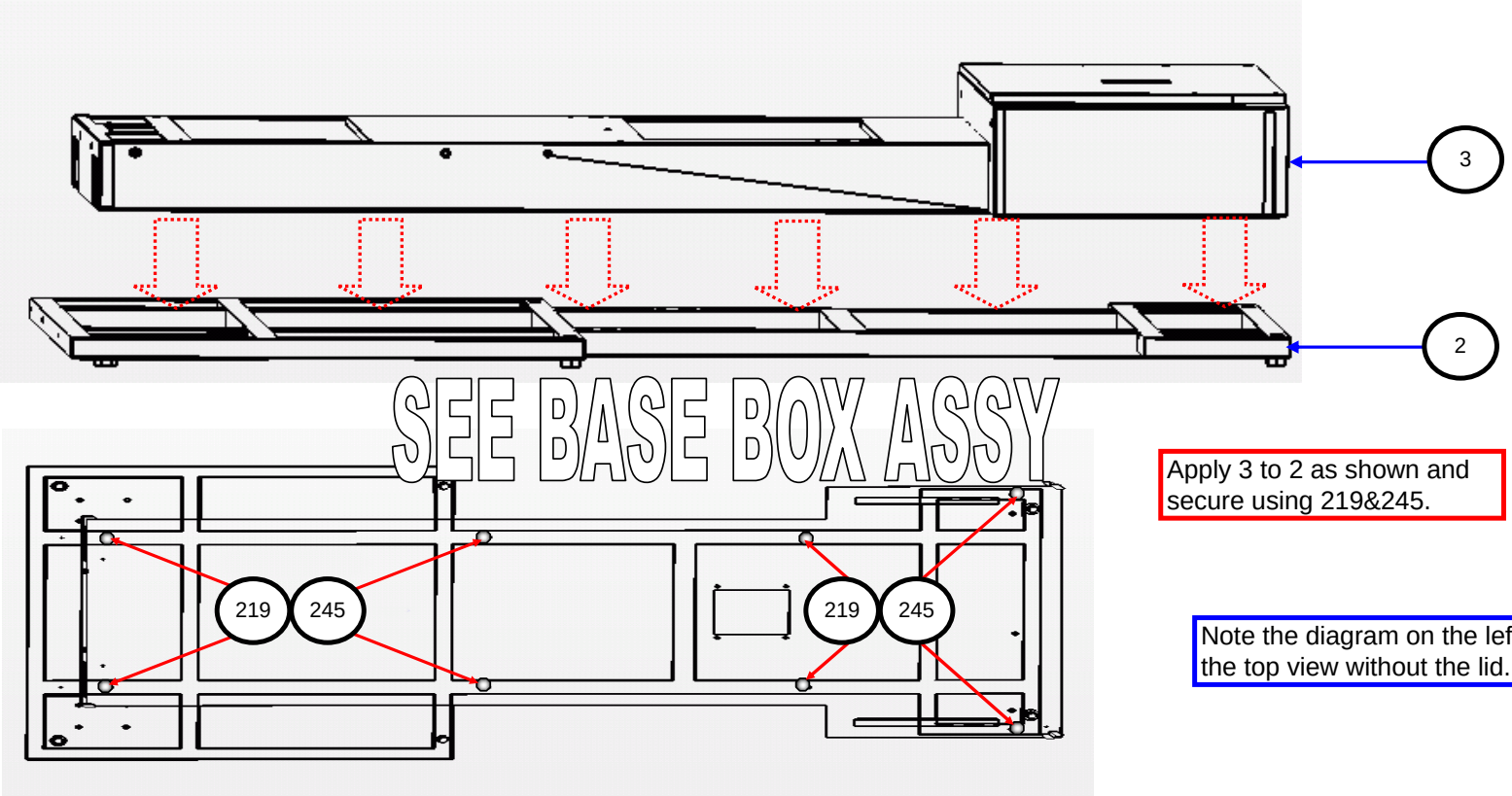

Apply 3 to 2 as shown and secure using 219&245.

Note the diagram on the left is the top view without the lid.

Tool List			
	13MM SOCKET		

Top level No	0	Level	2
Part number	0		
Description	0		
		Page	(1 / 10)

Seq.	Part number.	Description	Qty	Sub Assy	Ord	Tool	S.T
***2	ORP-3000UK	ASSY FRAME BASE	1				
***3	FD-3020UK	ASSY BASE BOX	1				
***219	060-F00800	M8 WSHR FORM A FLT	8				
***245	030-000820-S	M8X20 BLT W/S PAS	8				

Title: WCCF 2P

sega work instructions

Name	Richard Ford
Date	08/05/2006
Rev.	1

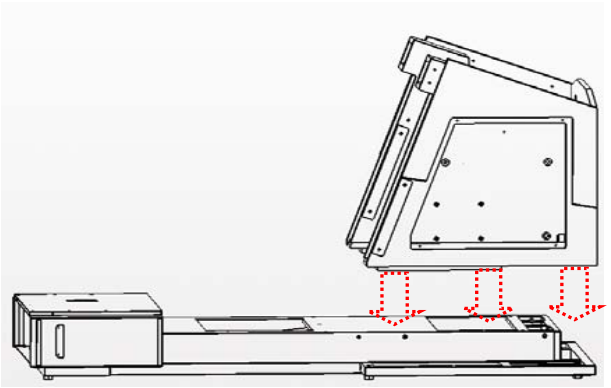

Apply 1 to 3 in position shown and secure using 219&260.

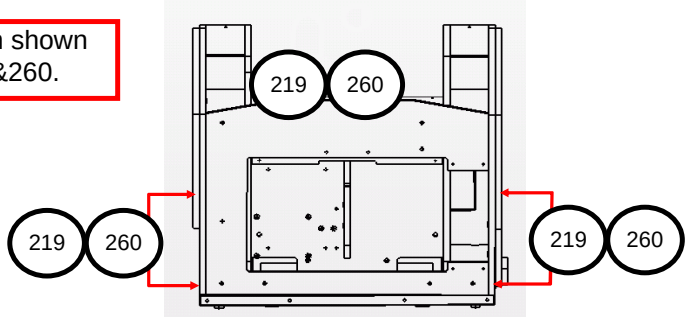

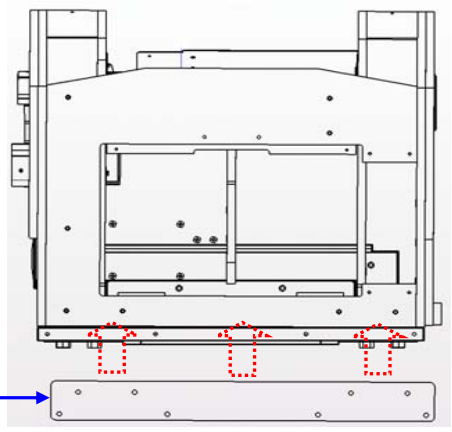

CAUTION
Two person handling required

Apply 42 to 1 in position shown and secure using 247&248.

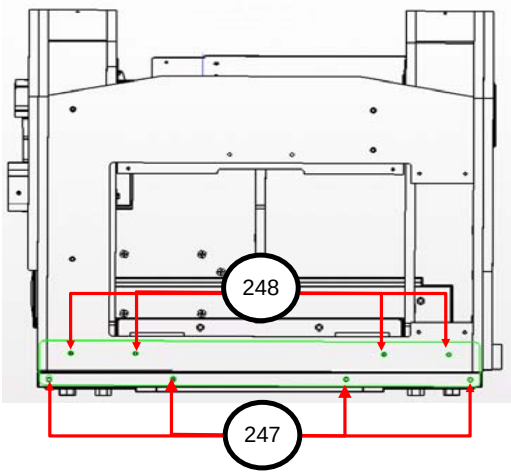

Tool List			
	13MM SOCKET	RACHET EXT B	

Top level No	0	Level	2
Part number	0		
Description	0		
		Page	(2 / 10)

Seq.	Part number.	Description	Qty	Sub Assy	Ord	Tool	S.T
***1	ORP-2051UK	COCKPIT CABI	1				
***42	ORP-2055UK	JOINT PLATE REAR	1				
***219	060-F00800	M8 WSHR FORM A FLT	6				
***247	030-000820-SB	M8X20 BLT W/S BLK	4				
***248	030-000830-SB	M8X30 BLT W/S BLK	4				
***260	030-000830-S	M8 BLT SPR PAS	6				

Title: WCCF 2P

sega work instructions

Name	Richard Ford
Date	08/05/2006
Rev.	1

Apply 29 to 1 in position shown and secure using 210&212.

Apply 55 to 1 in position shown and secure using 212,244&254.

Apply 54 to 1 in position shown and secure using 226.

Apply 53 to 1 in position shown and secure using 226.

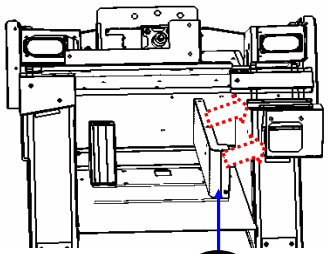

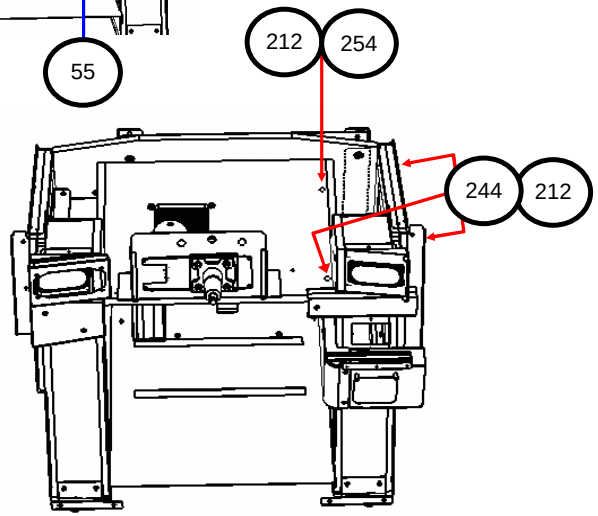

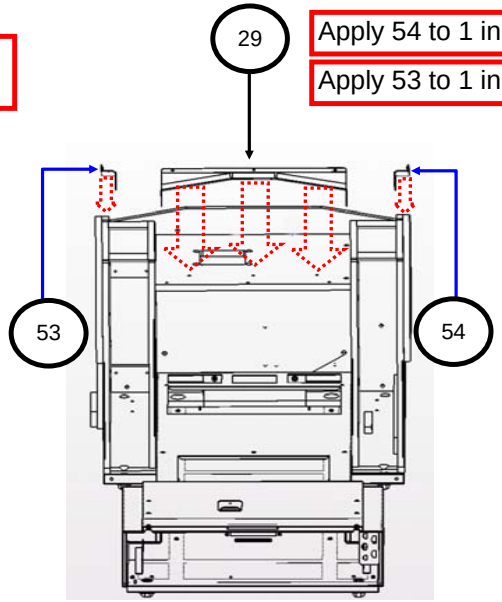

TOP VIEW

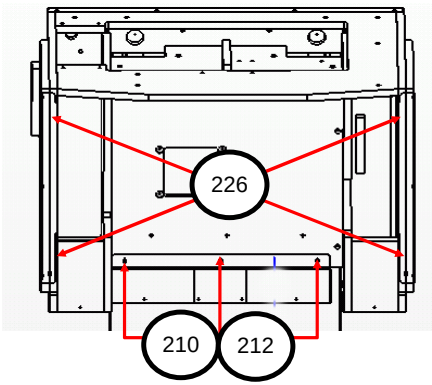

Tool List			
	PHILLIPS NO2	10MM SOCKET	

Top level No	0	Level	2
Part number	0		
Description	0		
		Page	(3 / 10)

Seq.	Part number.	Description	Qty	Sub Assy	Ord	Tool	S.T
***29	ORP-2019UK	COVER KNEE	1				
***53	ORP-2060UK	BONNET BRKT L	1				
***54	ORP-2061UK	BONNET BRKT R	1				
***55	ORP-2062UK	FOOTWELL BRACKET R	1				
***210	030-000620-S	M6X20 BLT SPR PAS	3				
***212	060-F00600	M6 WSHR FORM A FLT	7				
***226	000-P00512-W	M5X12 MSCR PAN W/FS PAS	4				
***244	030-000630-S	M6X30 BLT SPR PAS	3				
***254	030-000650	M6X50 BLT PAS	1				

Title: WCCF 2P

sega work instructions

Name	Richard Ford
Date	08/05/2006
Rev.	1

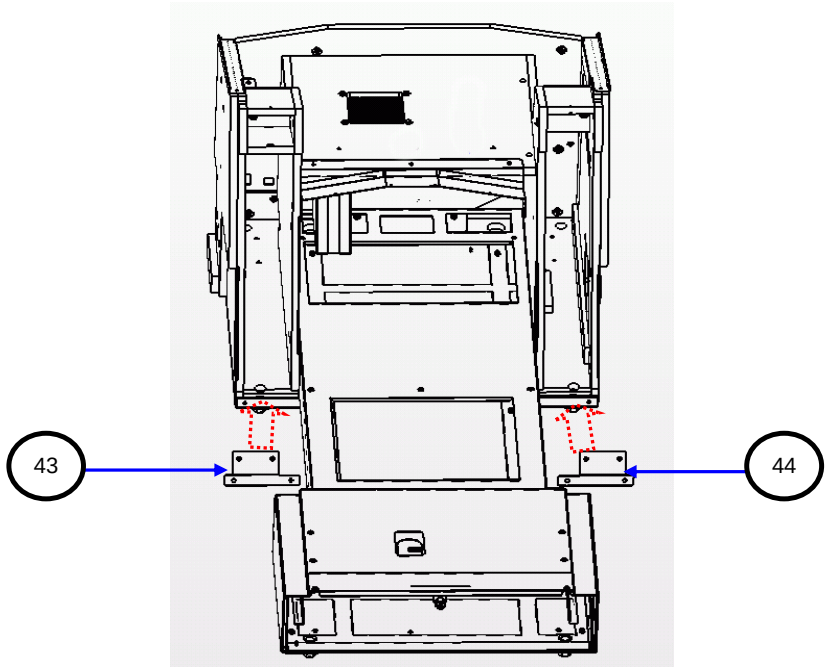

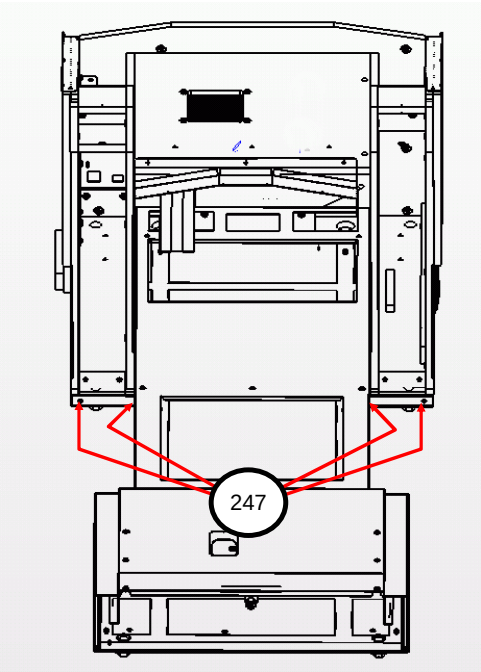

Apply 43 to 1 in position shown and secure using 247.

Apply 44 to 1 in position shown and secure using 247.

Tool List			
	13MM SOCKET		

Top level No	0	Level	2
Part number	0		
Description	0		
		Page	(4 / 10)

Seq.	Part number.	Description	Qty	Sub Assy	Ord	Tool	S.T
***43	ORP-2056UK	JOINT PLATE FRONT L	1				
***44	ORP-2057UK	JOINT PLATE FRONT R	1				
***247	030-000820-SB	M8X20 BLT W/S BLK	4				

Title: WCCF 2P

sega work instructions

Name	Richard Ford
Date	08/05/2006
Rev.	1

Apply 51 to 1 in position shown and secure using 246,255&259.

Apply 52 to 1 in position shown and secure using 246,255&259.

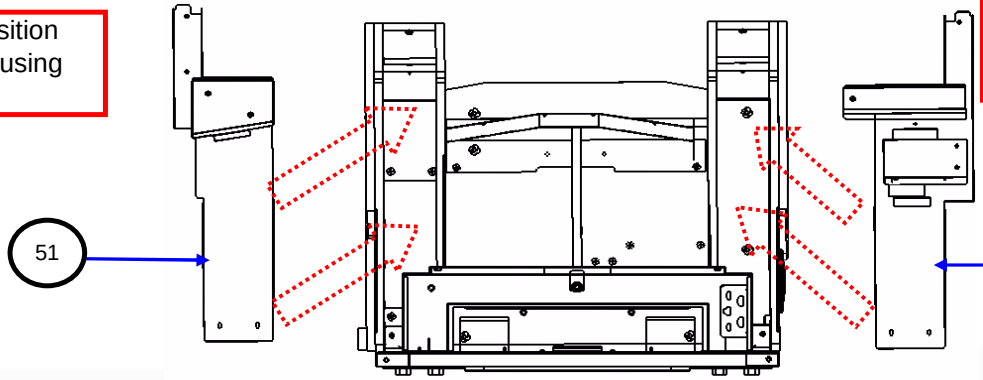

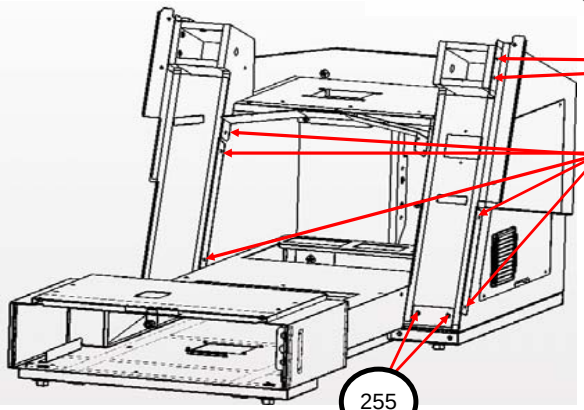

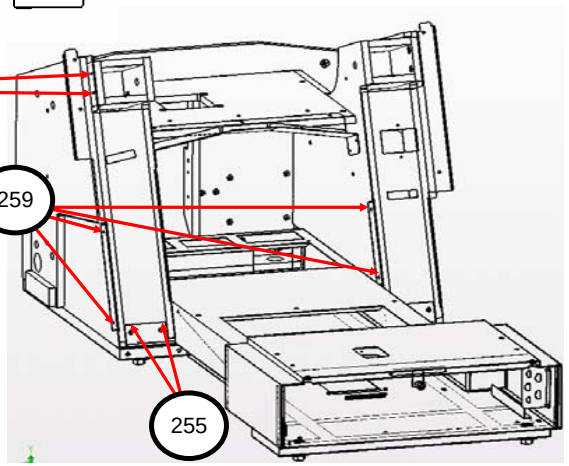

Tool List			
	PHILLIPS NO2		

Top level No	0	Level	2
Part number	0		
Description	0		
		Page	(5 / 10)

Seq.	Part number.	Description	Qty	Sub Assy	Ord	Tool	S.T
***51	ORP-2058UK	COVER COCKPIT LOWER L	1				
***52	ORP-2059UK	COVER COCKPIT LOWER R	1				
***246	000-T00530-0B	M5X30 MSCR TH BLK	4				
***255	000-T00616-0B	M6X16 MSCR TH BLK	4				
***259	000-T00630-0B	M6X25 MSCR TH BLK	9				

Title: WCCF 2P

sega work instructions

Name	Richard Ford
Date	08/05/2006
Rev.	1

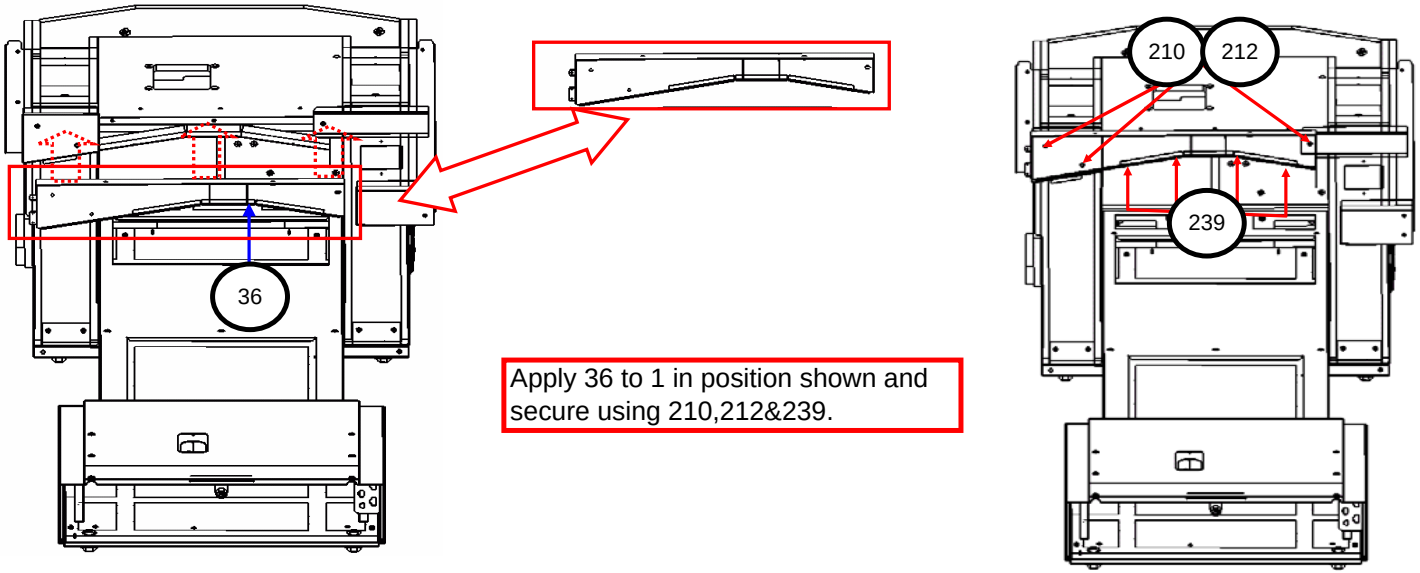

Apply 36 to 1 in position shown and secure using 210,212&239.

Tool List			
	10MM SOCKET		

Top level No	0	Level	2
Part number	0		
Description	0		
		Page	(6 / 10)

Seq.	Part number.	Description	Qty	Sub Assy	Ord	Tool	S.T
***36	ORP-2026UK	BULK BOARD HOLDER	1				
***210	030-000620-S	M6X20 BLT W/S PAS	3				
***212	060-F00600	M6 WSHR FORM A FLT PAS	3				
***239	000-T00408-0B	M4X8 MSCR TH BLK	4				

Title: WCCF 2P

sega work instructions

Name	Richard Ford
Date	08/05/2006
Rev.	1

Apply 5 to 1 in position shown and secure using 210&244.

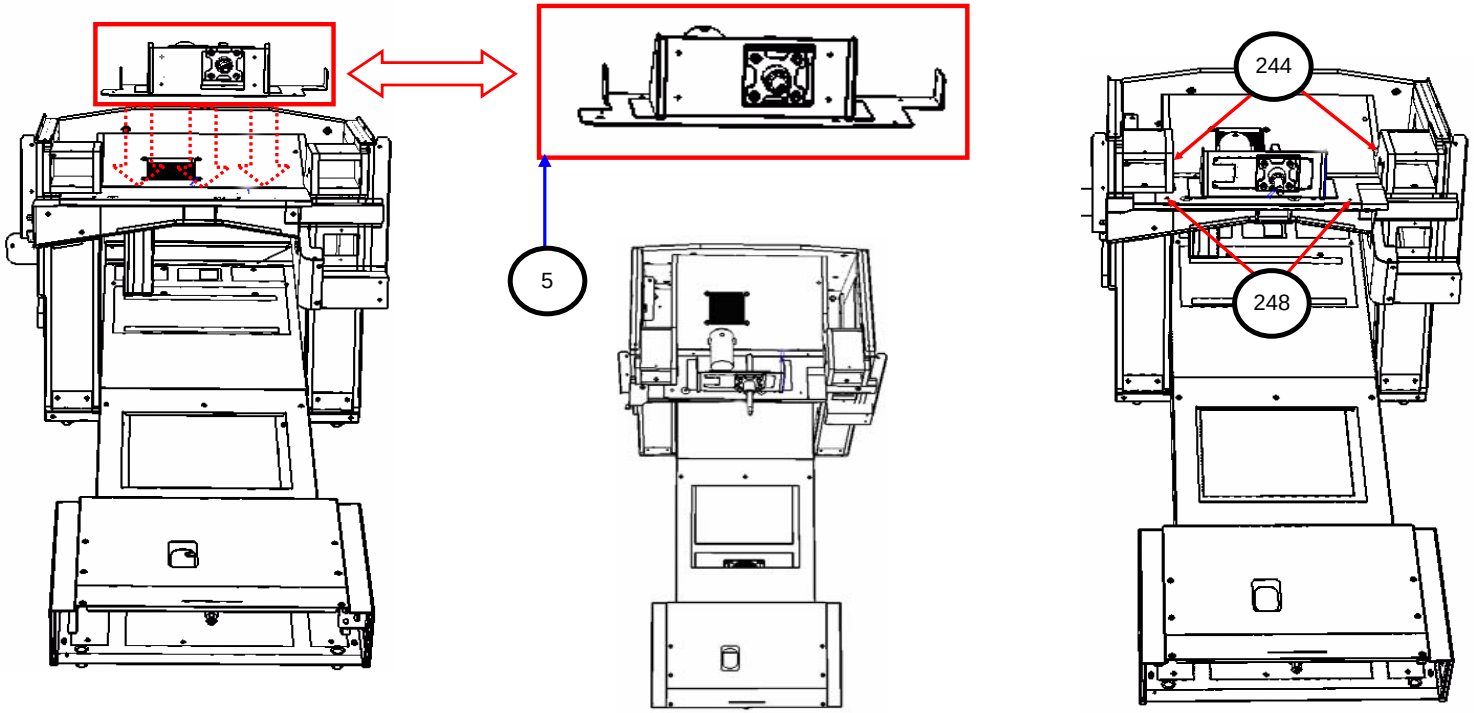

Tool List			
	10MM SOCKET		

Top level No	0	Level	2
Part number	0		
Description	0		
		Page	(7 / 10)

Seq.	Part number.	Description	Qty	Sub Assy	Ord	Tool	S.T
***5	FD-2054UK	CONTROL PANEL BRKT	1				
***244	030-000630-S	M6X30 BLT W/S PAS	2				
***248	030-000830-SB	M8X30 BLT W/S BLK	2				

Title: WCCF 2P

sega work instructions

Name	Richard Ford
Date	08/05/2006
Rev.	1

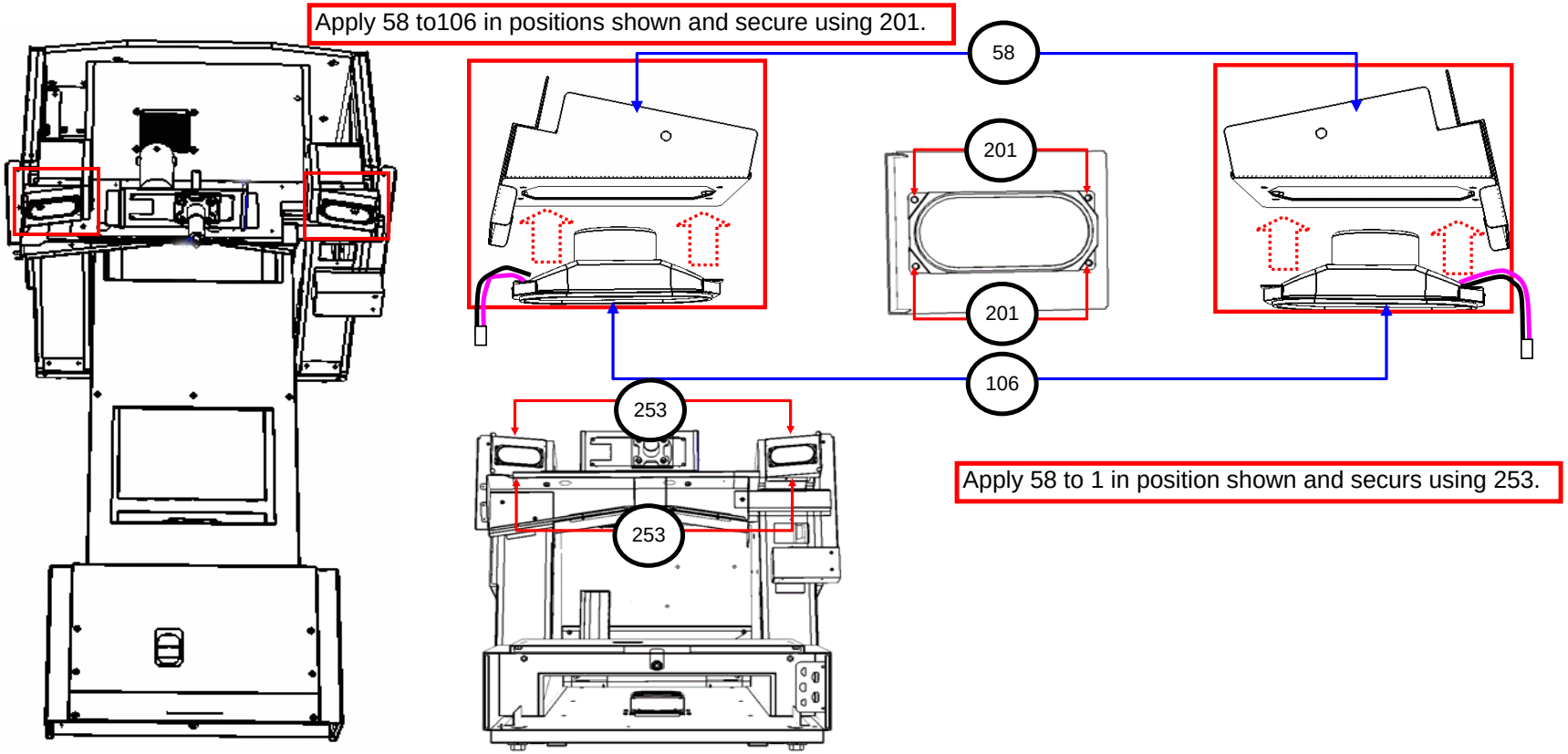

Tool List			
	PHILLIPS NO2		

Top level No	0	Level	2
Part number	0		
Description	0		
		Page	(8 / 10)

Seq.	Part number.	Description	Qty	Sub Assy	Ord	Tool	S.T
***58	FD-2065UK	SPEAKER MTG BRKT	2				
***106	130-365-568UK	SPEAKER-EPILITICAL-8 0HMS 15W	2				
***201	000-P00412-W	M4X12 MSCR PAN W/FS PAS	8				
***253	000-P00420-W	M4X20 MSCR PAN W/FS PAS	4				

Title: WCCF 2P

sega work instructions

Name	Richard Ford
Date	08/05/2006
Rev.	1

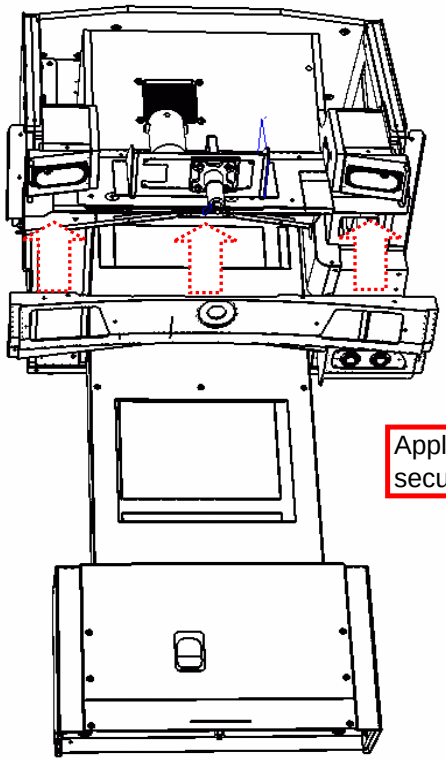

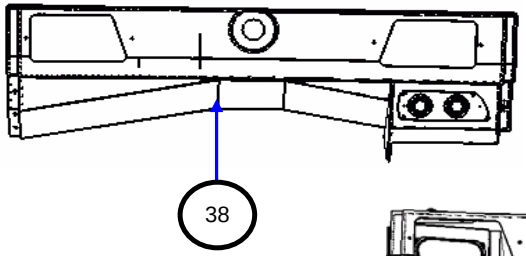

Apply 38 to 1 in position shown and secure from the bottom using 207 .

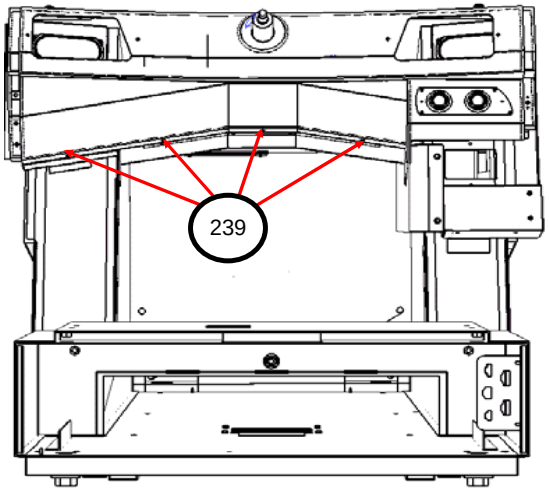

Tool List			
	PHILLIPS NO2		

Top level No	0	Level	2
Part number	0		
Description	0		
		Page	(9 / 10)

Seq.	Part number.	Description	Qty	Sub Assy	Ord	Tool	S.T
***38	ORP-2028UK	ASSY BULK BOARD COVER	1				
***239	000-T00412-0B	M4X8 MSCR TH BLK	4				

Title: WCCF 2P

sega work instructions

Name	Richard Ford
Date	08/05/2006
Rev.	1

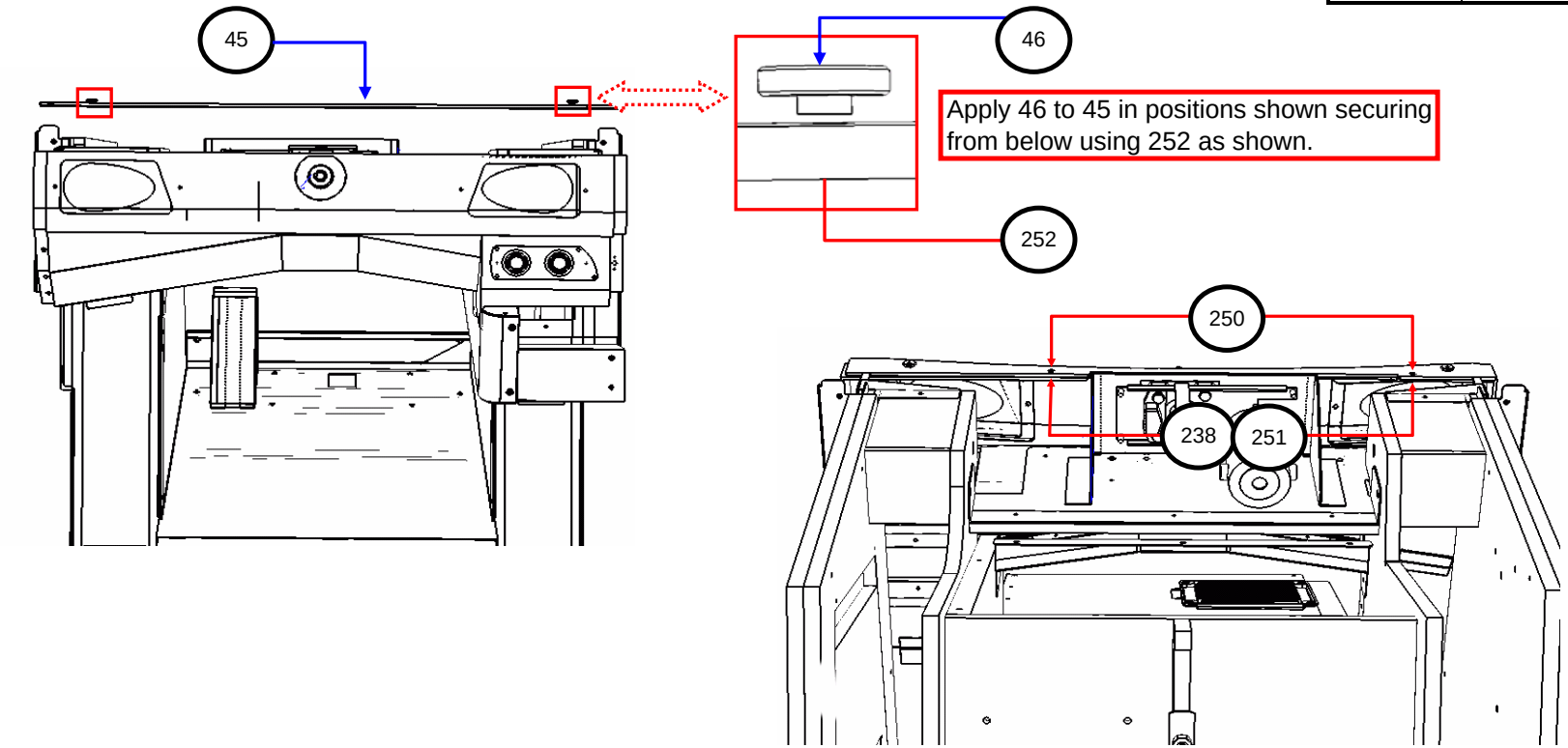

Apply 46 to 45 in positions shown securing from below using 252 as shown.

Apply 45 to 38 in position shown and secure using 250 from above and 238&251 from below.

Tool List			
	7MM SOCKET	PHILLIPS NO2	

Top level No	0	Level	2
Part number	0		
Description	0		
		Page	(10 / 10)

Seq.	Part number.	Description	Qty	Sub Assy	Ord	Tool	S.T
***45	ORP-2035UK	LENS FLASH	1				
***46	ORP-2036UK	HOLDER PIN	2				
***238	050-F00400	M4 FLG NUT SER PAS	2				
***250	000-F00416	M4X16 MSCR CSK	2				
***251	068-441616	M4 WSHR 16OD FLT PAS	2				
***252	000-F00420	M4X20 MSCR CSK	2				

Title: FORD DX

sega work instructions

Name	Richard Ford
Date	08/05/2006
Rev.	1

Apply 101 to 1 in position shown and secure using 201,202&203.

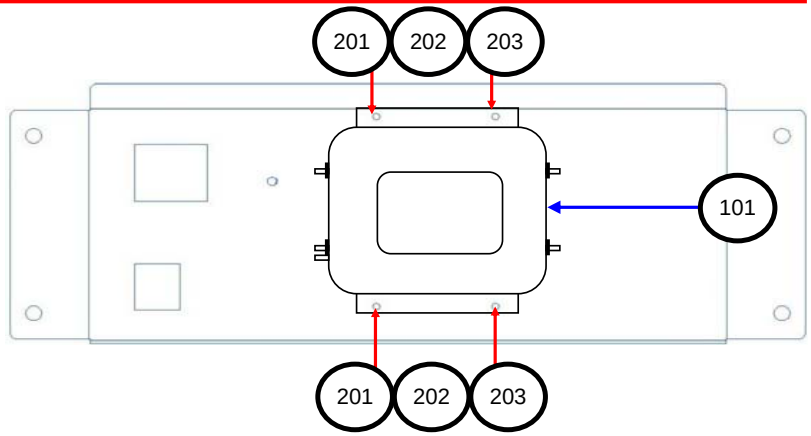

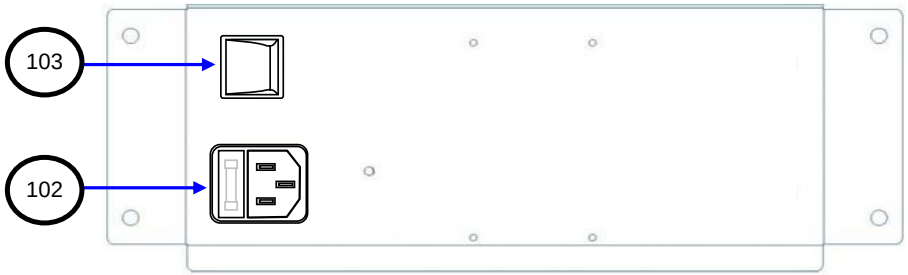

Apply 102&103 to 1 in positions shown.

Tool List			
	PHILLIPS NO1		

Top level No	4FD-0000UK	Level	2
Part number	FD-2070UK		
Description	ASSY AC UNIT		
		Page	(1 / 3)

Seq.	Part number.	Description	Qty	Sub Assy	Ord	Tool	S.T
****1	ORP-2017UK	AC BRKT UK	1				
****101	EP1379	FILTER EMI 10A ARCOTRONICS	1				
****102	EP1302	EUROSOCKET FUSED 10A 250VAC	1				
****103	EP1303	SWITCH ROCKER DPST 10A 250VAC	1				
****201	060-S00300	M3 WSHR SPR PAS	4				
****202	060-F00300	M3 WSHR FORM A FLT PAS	4				
****203	000-P00310	M3X10 MSCR PAN PAS	4				

Title: FORD DX

sega work instructions

Name	Richard Ford
Date	08/05/2006
Rev.	1

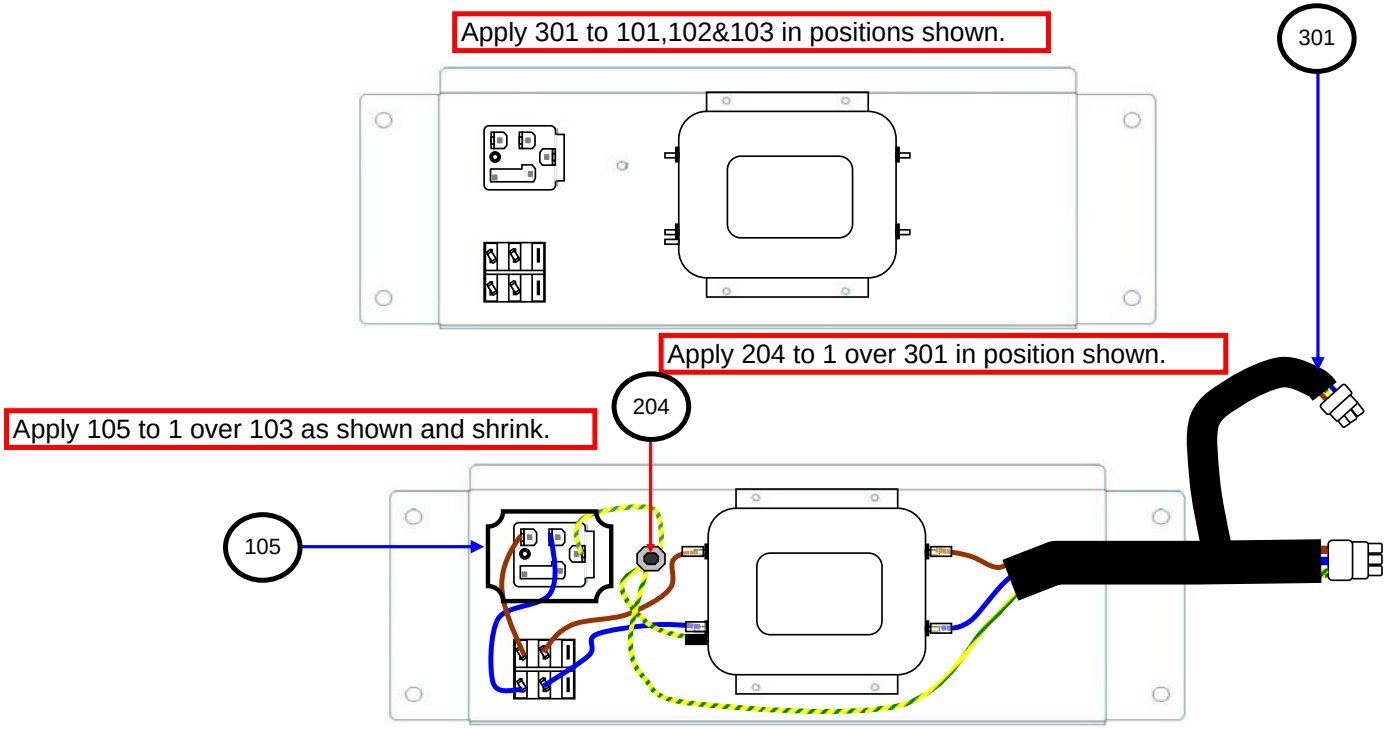

Tool List			
	HEAT GUN	7MM SOCKET	

Top level No	4FD-0000UK	Level	2
Part number	FD-2070UK		
Description	ASSY AC UNIT		
		Page	(2 / 3)

Seq.	Part number.	Description	Qty	Sub Assy	Ord	Tool	S.T
****105	310-5029-D508	HEAT SHRINK SLEEVING 50.8DIA	1				
****204	050-F00400	M4 NUT FLG SER PAS	1				
****301	ORP-60033UK	WH AC OUT PRIMARY	1				

Title: FORD DX

sega work instructions

Name	Richard Ford
Date	08/05/2006
Rev.	1

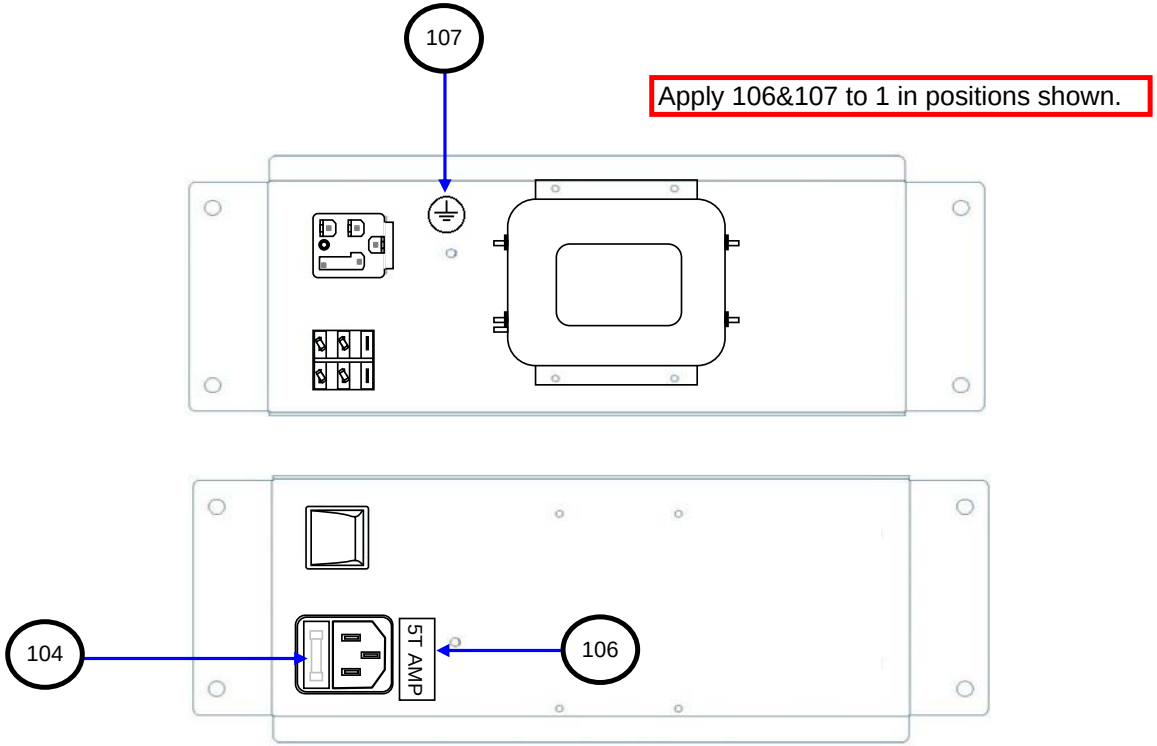

Tool List			

Top level No	4FD-0000UK	Level	2
Part number	FD-2070UK		
Description	ASSY AC UNIT		
		Page	(3 / 3)

Seq.	Part number.	Description	Qty	Sub Assy	Ord	Tool	S.T
****104	514-5078-5000	FUSE 5X20 CERAMIC SB 5000MA	1				
****106	421-6595-5000-T	STICKER FUSE 5000MA	1				
****107	LB1096	STICKER PROTECTIVE EARTH	1				

Title: FORD DX

sega work instructions

Name	Richard Ford
Date	08/05/2006
Rev.	1

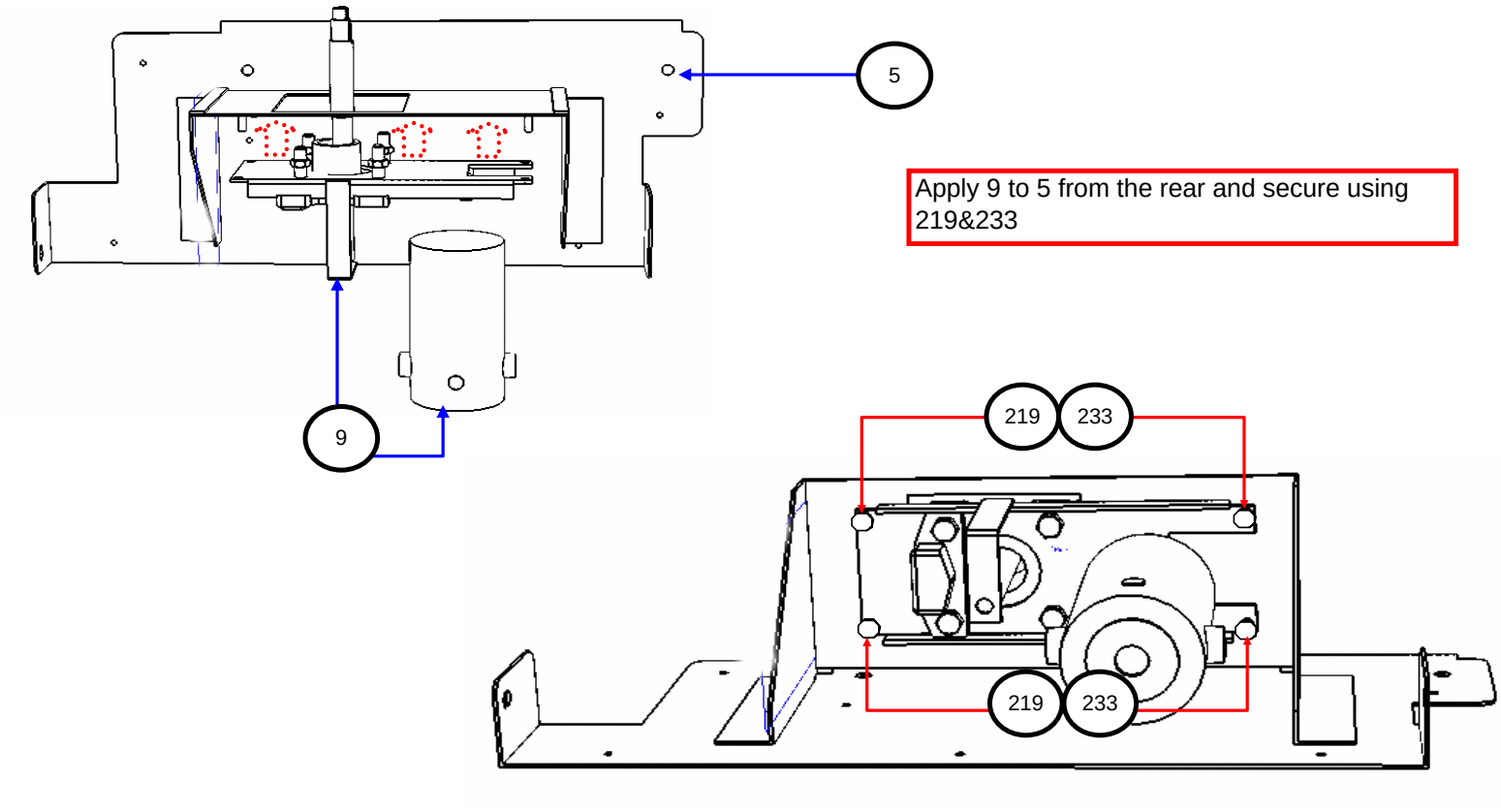

Apply 9 to 5 from the rear and secure using 219&233

Tool List			
	13MM SOCKET		

Top level No	4FD-0000UK	Level	2
Part number	ORP-3000UK		
Description	ASSY FRAME BASE		
		Page	(1 / 2)

Seq.	Part number.	Description	Qty	Sub Assy	Ord	Tool	S.T
***5	ORP-2054UK	CONTROL PANEL BRKT	1				
***9	FR-2500UK	ASSY MECHA HAPP50-0102-08	1				
***219	060-F00800	M8 WSHR FORM A FLT PAS	4				
***233	050-U00800	M8 NUT MYLOK PAS	4				

Title: FORD DX

sega work instructions

Name	Richard Ford
Date	08/05/2006
Rev.	1

Please note that this diagram will be used when the moulding has been applied to the cntrl pnl.

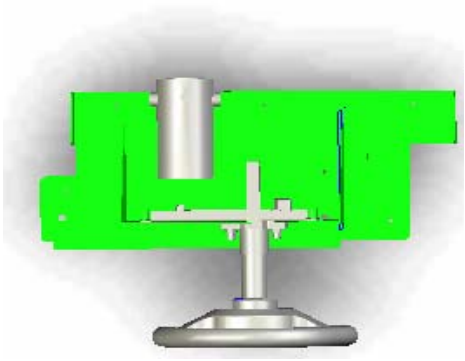

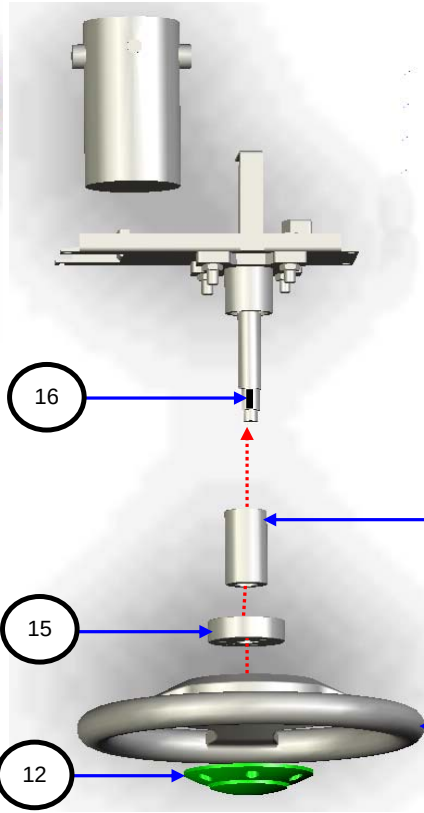

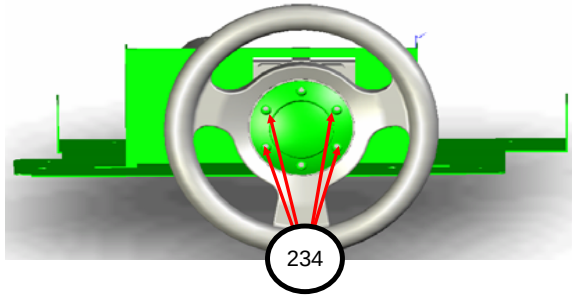

Apply 16 into 9 in positions shown.

Apply 8 over 16 onto 9 as shown.

Apply to 15 covering 16 as shown and secure using fixings supplied with 9.

Apply 11 to 15 securing with fixings supplied with 9 also.

Apply 12 to 11 securing with 234 as shown.

Tool List			
	HEX KEY SET	19MM SOCKET	

Top level No	4FD-0000UK	Level	2
Part number	ORP-3000UK		
Description	ASSY FRAME BASE		
		Page	(2 / 2)

Seq.	Part number.	Description	Qty	Sub Assy	Ord	Tool	S.T
***8	FR-2003UK	HANDLE COLLAR	1				
***11	SPG-2001	STEERING WHEEL	1				
***12	FRI-2002	EMBLEM	1				
***15	FRI-2055	BOSS COVER	1				
***16	DYN-1270	STOPPER KEY	1				
***234	FAS-20013	M4X16 SKT CAP CRM	4				

Title: FORD DX

sega work instructions

Name	Richard Ford
Date	08/05/2006
Rev.	1

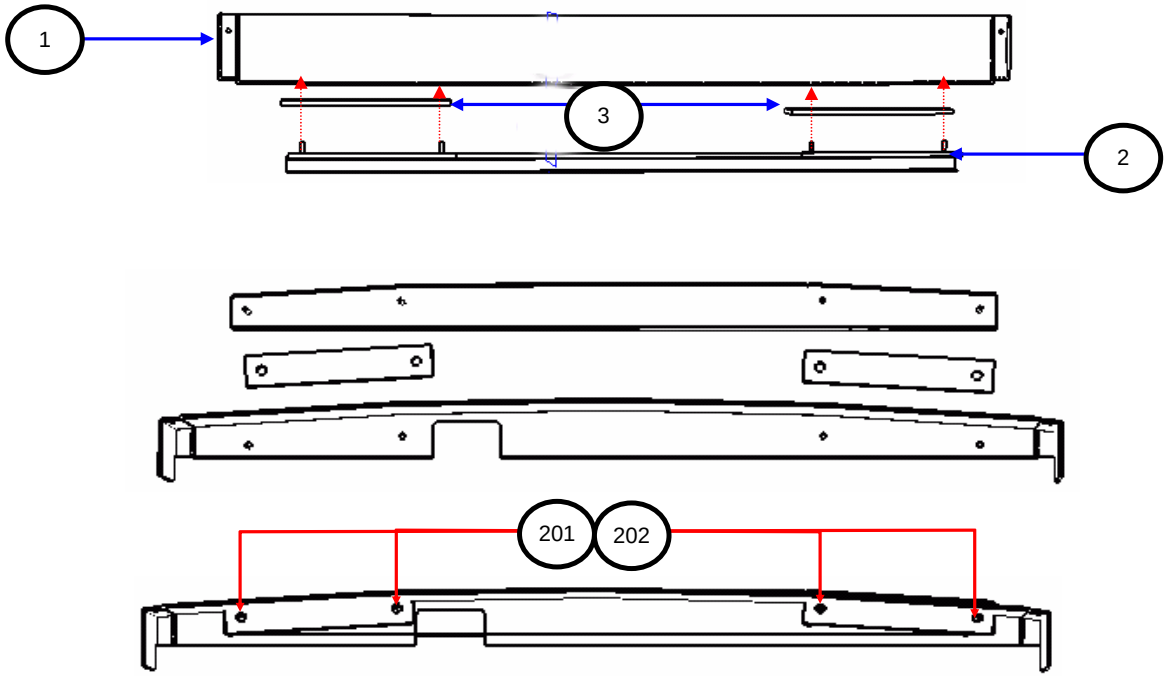

Apply 2 to 1 with 3 in between as shown and secure using 201&202.

Tool List			
	7MM SOCKET		

Top level No	4FD-0000UK	Level	2
Part number	ORP-3000UK		
Description	ASSY FRAME BASE		
		Page	(1 / 1)

Seq.	Part number.	Description	Qty	Sub Assy	Ord	Tool	S.T
****1	SPG-2054-BL	CTRL PANEL COVER BLACK	1				
****2	ORP-2064UK	BOX REAR CRTL PNL COVER	1				
****3	ORP-2081UK	SPACER BOX REAR	2				
****201	050-F00400	M4 NUT FLG SER PAS	4				
****202	068-441616	M4 WSHR 16OD FLT PAS	4				

Title: FORD DX

sega work instructions

Name	Richard Ford
Date	08/05/2006
Rev.	1

Apply 103&104 to 101&102 as shown below.

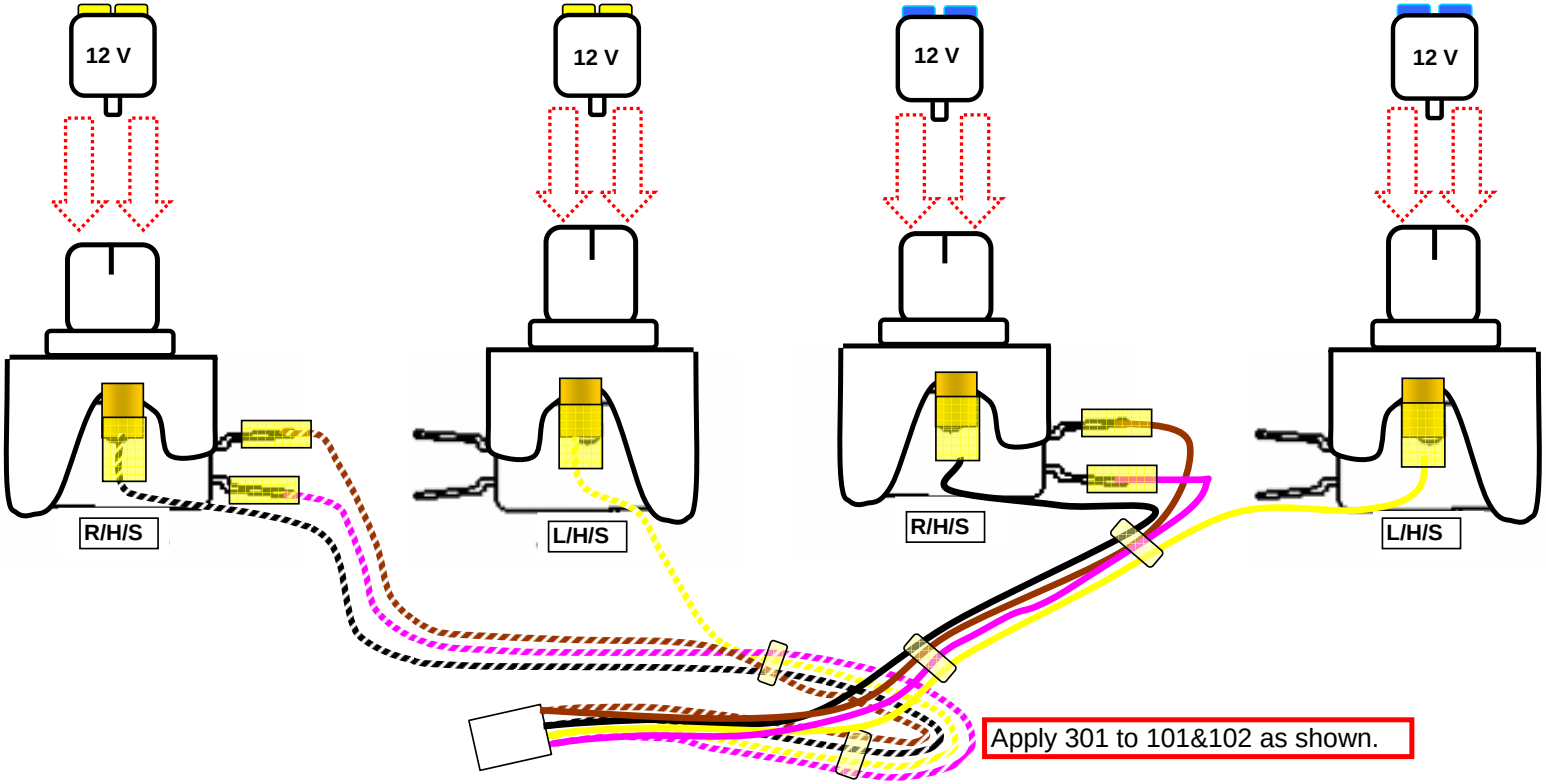

Apply 301 to 101&102 as shown.

Tool List			

Top level No	4FD-0000UK	Level	2
Part number	ORP-3000UK		
Description	ASSY FRAME BASE		
		Page	(1 / 1)

Seq.	Part number.	Description	Qty	Sub Assy	Ord	Tool	S.T
****1	FD-2021UK	SW PLATE	1				
****101	509-6001-B	BTN RND 12V BLUE 22-0665-6	1				
****102	509-6001-Y	BTN RND 12V YELLOW 22-2060-4LP	1				
****103	LT1051	LED CLUSTER YEL 161-12103-4	1				
****104	LT-1053	LED CLUSTER BLU 161-12103-6	1				

Title: FORD DX

sega work instructions

Name	Richard Ford
Date	08/05/2006
Rev.	1

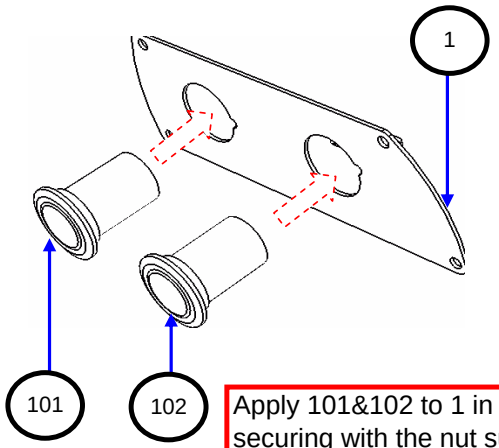

Apply 101&102 to 1 in positions shown securing with the nut supplied.

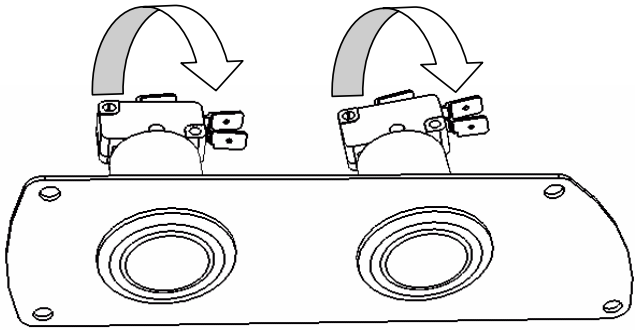

Apply the 2nd part of 101&102 to 101&102 by twisting in as shown.

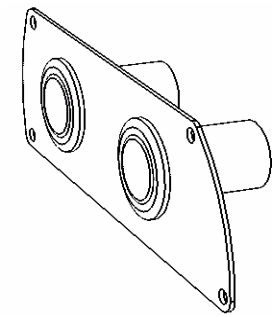

Tool List			

Top level No	4FD-0000UK	Level	2
Part number	ORP-3000UK		
Description	ASSY FRAME BASE		
		Page	(2 / 1)

Seq.	Part number.	Description	Qty	Sub Assy	Ord	Tool	S.T

Title: FORD DX

sega work instructions

Name	Richard Ford
Date	08/05/2006
Rev.	1

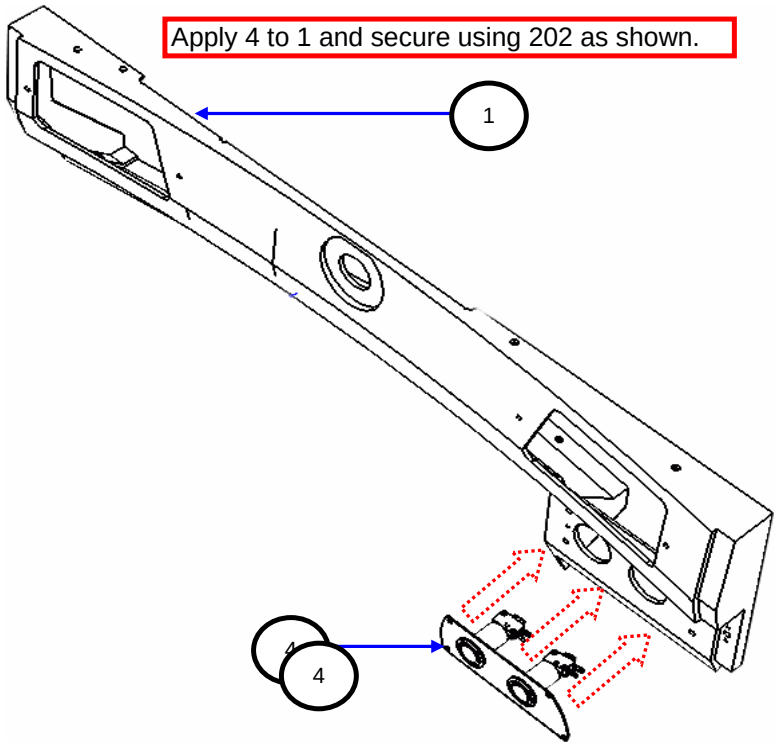

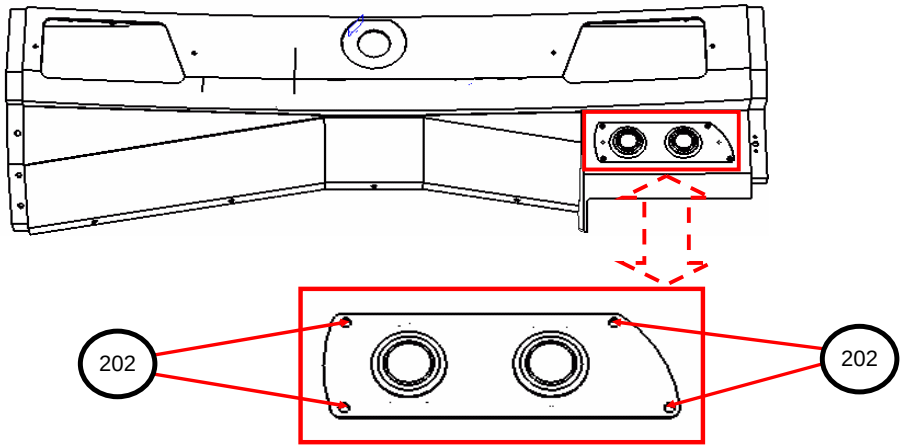

Tool List			
	PHILLIPS NO2		

Top level No	4FD-0000UK	Level	2
Part number	ORP-3000UK		
Description	ASSY FRAME BASE		
		Page	(1 / 2)

Seq.	Part number.	Description	Qty	Sub Assy	Ord	Tool	S.T
****1	SPG-2028	BULK BOARD COVER	1				
****4	ORT-2100	ASSY SW PLATE	1				
****202	000-T00412-0C	M4X12 MSCR TH CRM	4				

Title: FORD DX

sega work instructions

Name	Richard Ford
Date	08/05/2006
Rev.	1

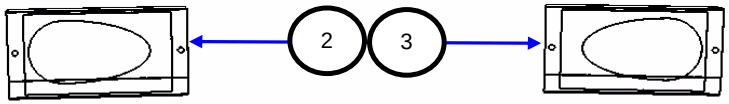

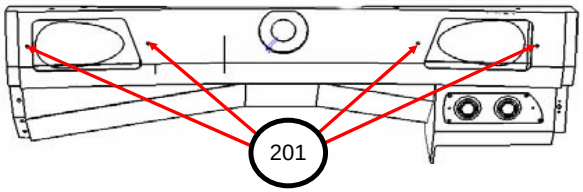

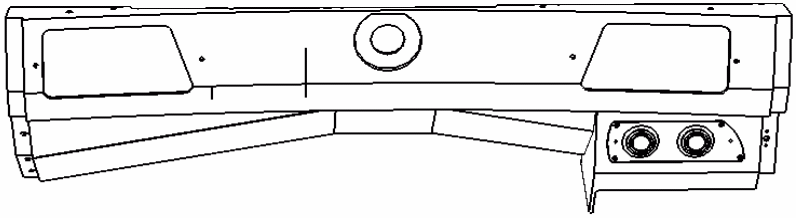

Apply 2&3 to 1 in position shown and secure using 201,203&204 as shown.

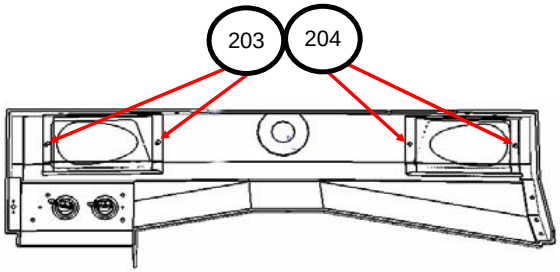

Tool List			
	7MM SOCKET	PHILLIPS NO2	

Top level No	4FD-0000UK	Level	2
Part number	ORP-3000UK		
Description	ASSY FRAME BASE		
		Page	(2 / 2)

Seq.	Part number.	Description	Qty	Sub Assy	Ord	Tool	S.T
****2	ORP-2052UK	SPEAKER NET L	1				
****3	ORP-2053UK	SPEAKER NET R	1				
****201	008-T00412-0B	M4X12 TMP PRF TH BLK	4				
****203	050-F00400	M4 NUT FLG SER PAS	4				
****204	060-F00400	M4 WSHR FORM A FLT PAS	4				

Title: FORD DX

sega work instructions

Name	Richard Ford
Date	08/05/2006
Rev.	1

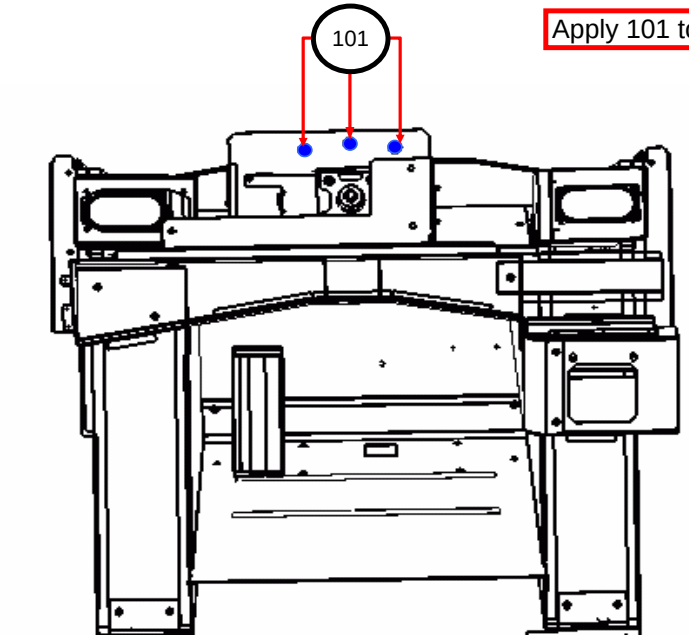

Apply 101 to 5 in positions shown (clip-in).

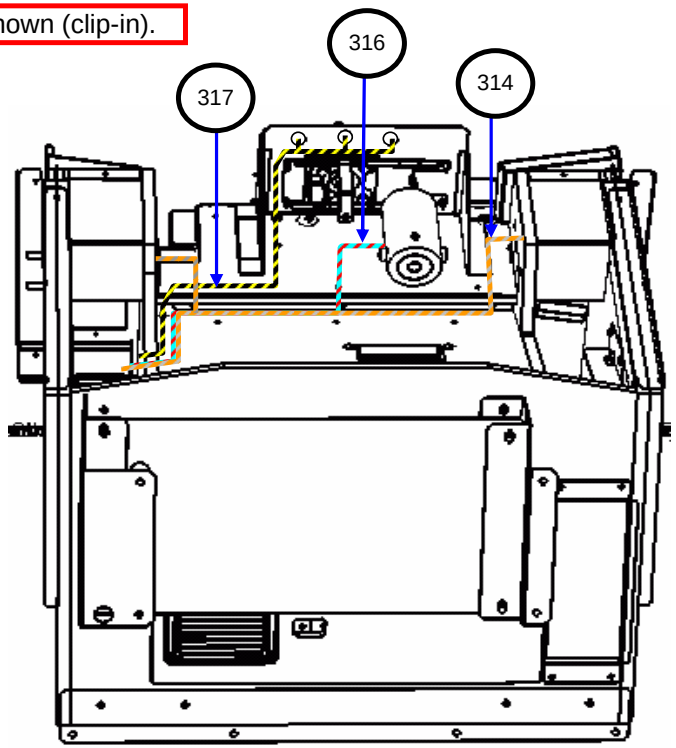

Apply 317 to 101 and feed as shown.

Tool List			

Top level No	4FD-0000UK	Level	2
Part number	ORP-3000UK		
Description	ASSY FRAME BASE		
		Page	(1 / 6)

Seq.	Part number.	Description	Qty	Sub Assy	Ord	Tool	S.T
***37	ORP-2027UK	CONTROL PANEL COVER R	1				
***101	LT1053	LED CLUSTER BLU 161-12103-6	3				
***314	FD-66029UK	WH SPKRS EXT FRONT	1				
***316	FD-66043UK	WH STEERING	1				
***317	FD-66044UK	WH DIALS	1				

Title: FORD DX

sega work instructions

Name	Richard Ford
Date	08/05/2006
Rev.	1

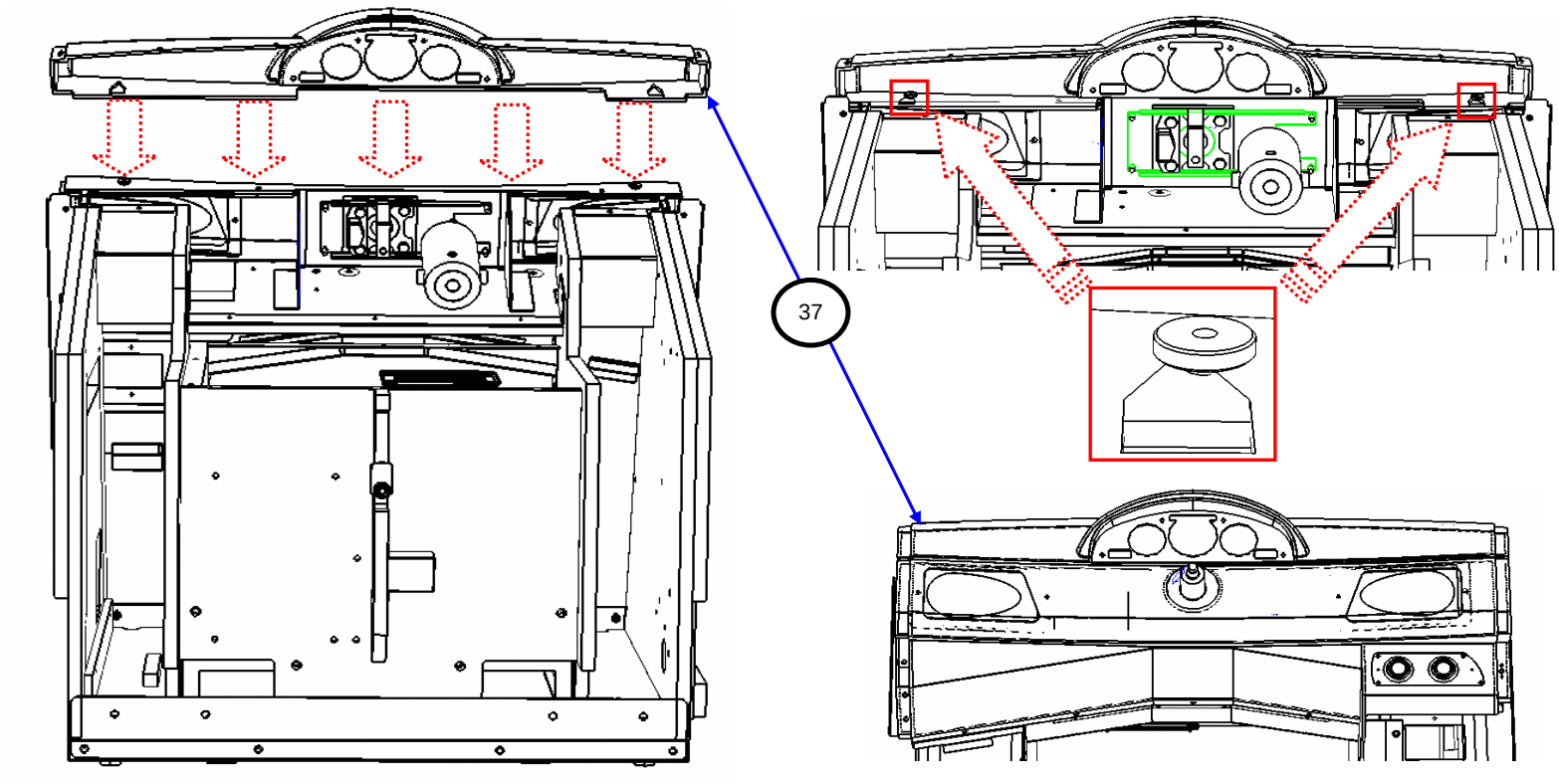

Apply 37 to 45 sliding over 46 as shown above.

Tool List			
	PHILLIPS NO2		

Top level No	4FD-0000UK	Level	2
Part number	ORP-3000UK		
Description	ASSY FRAME BASE		
		Page	(2 / 6)

Seq.	Part number.	Description	Qty	Sub Assy	Ord	Tool	S.T
***37	ORP-2027UK	CONTROL PANEL COVER R	1				

Title: FORD DX

sega work instructions

Name	Richard Ford
Date	08/05/2006
Rev.	1

Apply 69 to 37 in position shown and secure using 207.

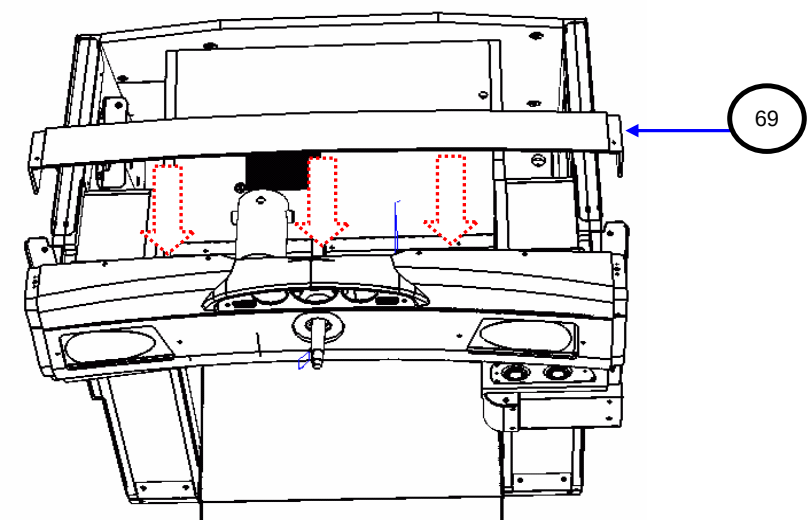

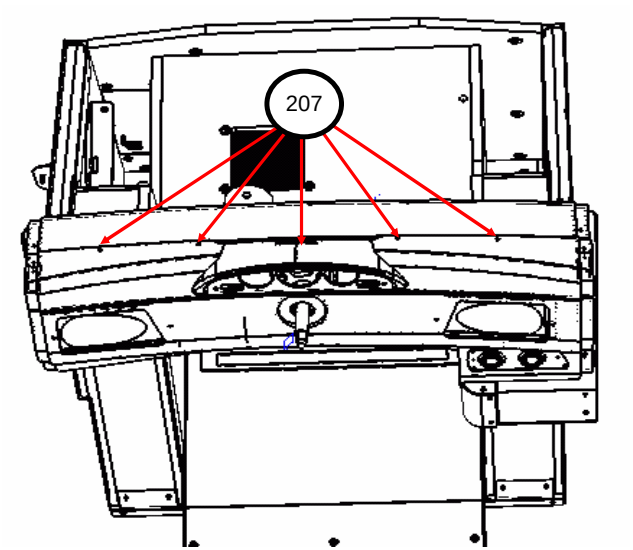

Tool List			
	PHILLIPS NO2		

Top level No	4FD-0000UK	Level	2
Part number	ORP-3000UK		
Description	ASSY FRAME BASE		
		Page	(3 / 6)

Seq.	Part number.	Description	Qty	Sub Assy	Ord	Tool	S.T
***69	ORP-2080UK	ASSY CTRL PANEL COVER F	1				
***207	000-T00412-0B	M4X12 MSCR TH BLK	5				

Title: FORD DX

sega work instructions

Name	Richard Ford
Date	08/05/2006
Rev.	1

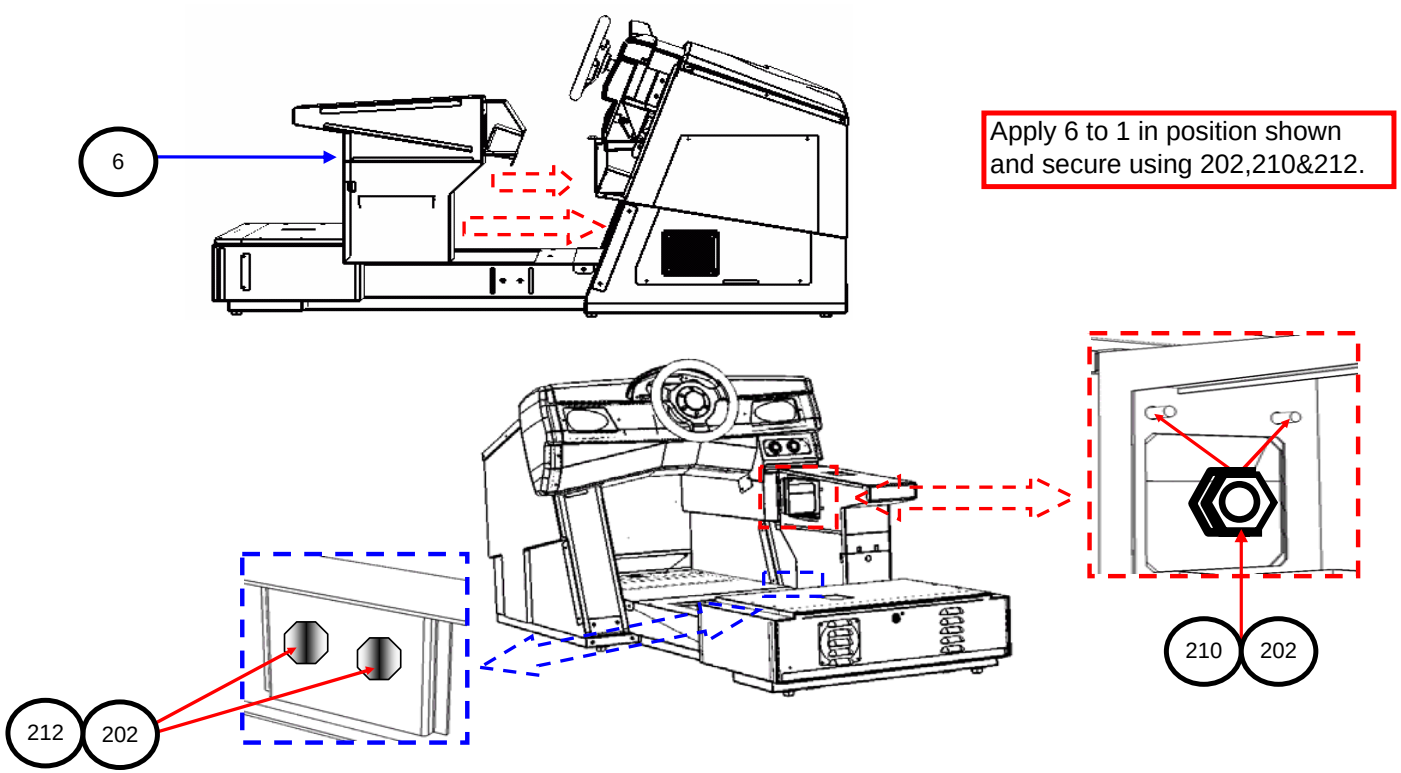

Tool List			
	13MM SOCKET		

Top level No	4FD-0000UK	Level	2
Part number	ORP-3000UK		
Description	ASSY FRAME BASE		
		Page	(4 / 6)

Seq.	Part number.	Description	Qty	Sub Assy	Ord	Tool	S.T
**6	FD-0300UK	COIN TOWER ASSY	1				
**202	068-852216-0B	M8 WSHR 22OD FLT BLK	4				
**210	050-U00800	M8 NUT NYLOK PAS	2				
**212	030-000820-S	M8X20 BLT W/S PAS	2				

Title: FORD DX

sega work instructions

Name	Richard Ford
Date	08/05/2006
Rev.	1

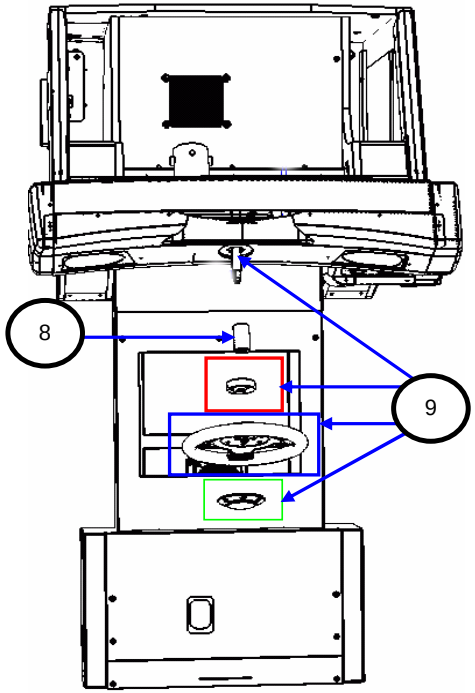

Apply 8 to 9 then apply the rest of 9 to the front of 8 as shown securing with the fixings supplied.

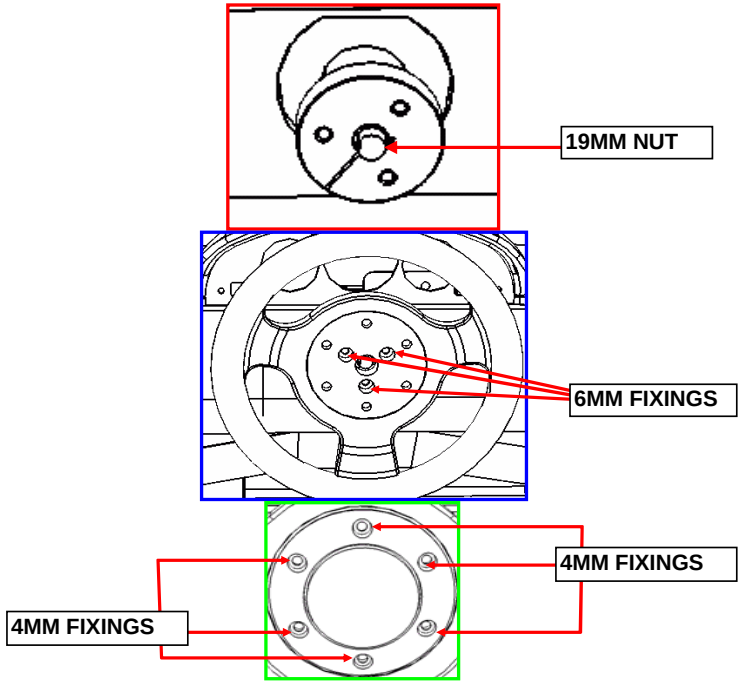

Tool List			
	19MM SOCKET	T15	4MM HEX KEY

Top level No	4FD-0000UK	Level	2
Part number	ORP-3000UK		
Description	ASSY FRAME BASE		
		Page	(5 / 6)

Seq.	Part number.	Description	Qty	Sub Assy	Ord	Tool	S.T
***8	FR-2003UK	HANDLE MECHA	1				
***9	FR-2500UK	ASSY HANDLE MECHA HAPP 50-0102-08	1				

Title: FORD DX

sega work instructions

Name	Richard Ford
Date	08/05/2006
Rev.	1

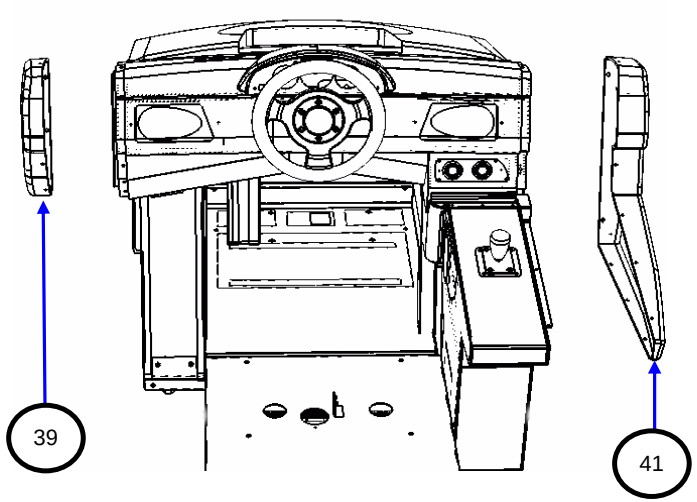

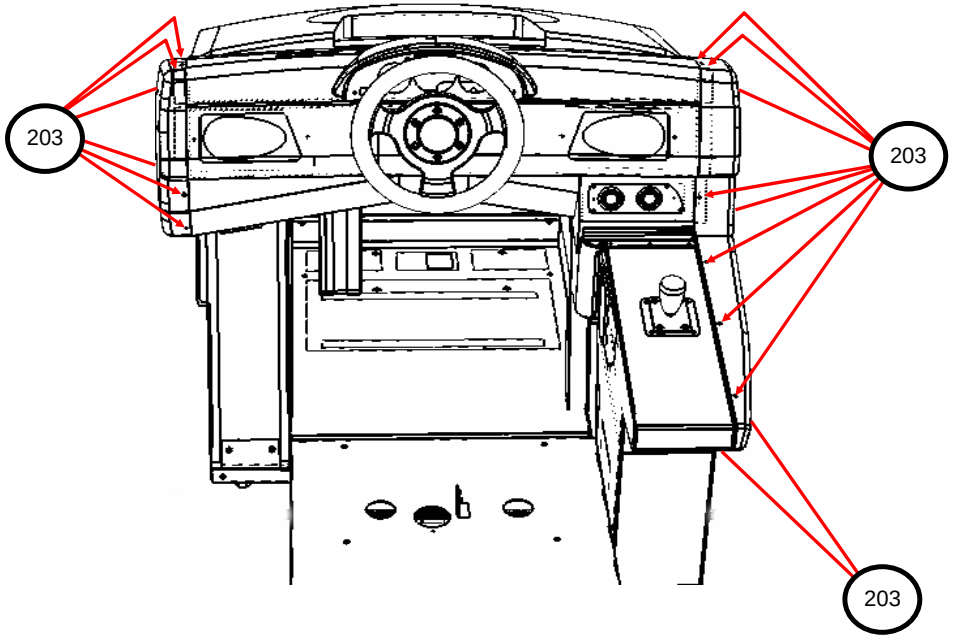

Apply 39&41 to 1 in positions shown and secure using 203.

Tool List			
	PHILLIPS NO2		

Top level No	4FD-0000UK	Level	2
Part number	ORP-3000UK		
Description	ASSY FRAME BASE		
		Page	(6 / 6)

Seq.	Part number.	Description	Qty	Sub Assy	Ord	Tool	S.T
***39	SPG-2029-A-BLU	CONPANE SIDE COVER L BLANK	1				
***41	SPG-2030-A-BLU	CONPANE SIDE COVER R BLANK	1				
***203	000-T00412-0B	M4X12 MSCR TH BLK	16				

Title: FORD DX

sega work instructions

Name	Richard Ford
Date	08/05/2006
Rev.	1

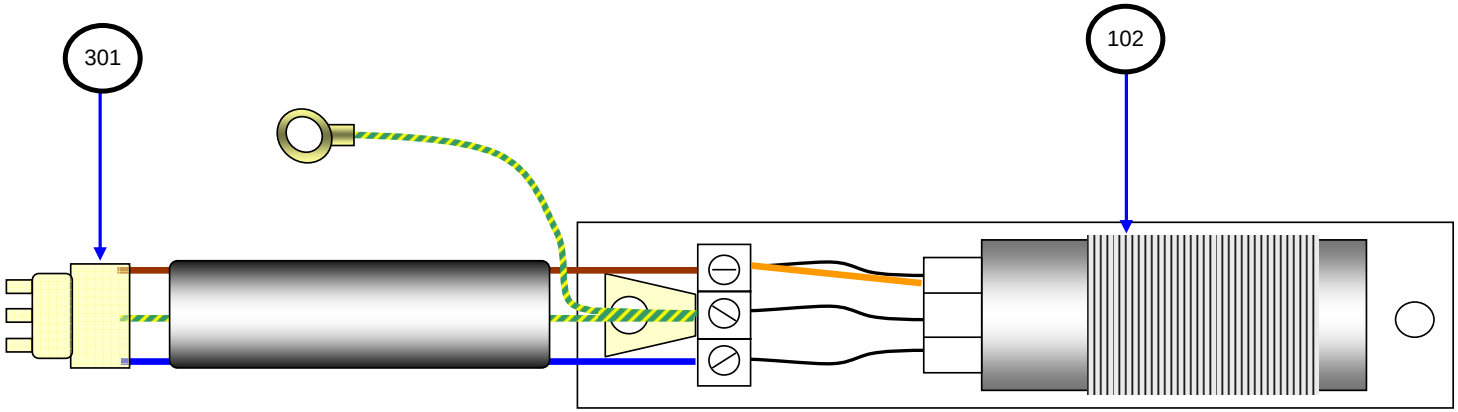

Apply 301 to 102 as shown.

Tool List			
	TERMINAL		

Top level No	4FD-0000UK	Level	2
Part number	ORP-3000UK		
Description	ASSY FRAME BASE		
		Page	(1 / 6)

Seq.	Part number.	Description	Qty	Sub Assy	Ord	Tool	S.T
***102	390-0240-40UK	FL UNIT 240V 40W	1				
***301	FD-66036UK	WH FL UNIT	1				

Title: FORD DX

sega work instructions

Name	Richard Ford
Date	08/05/2006
Rev.	1

Apply 102 to 3 in position shown securing with 203, also securing 301 with 203 as shown.

Apply the clips from 102 in positons shown using 206.

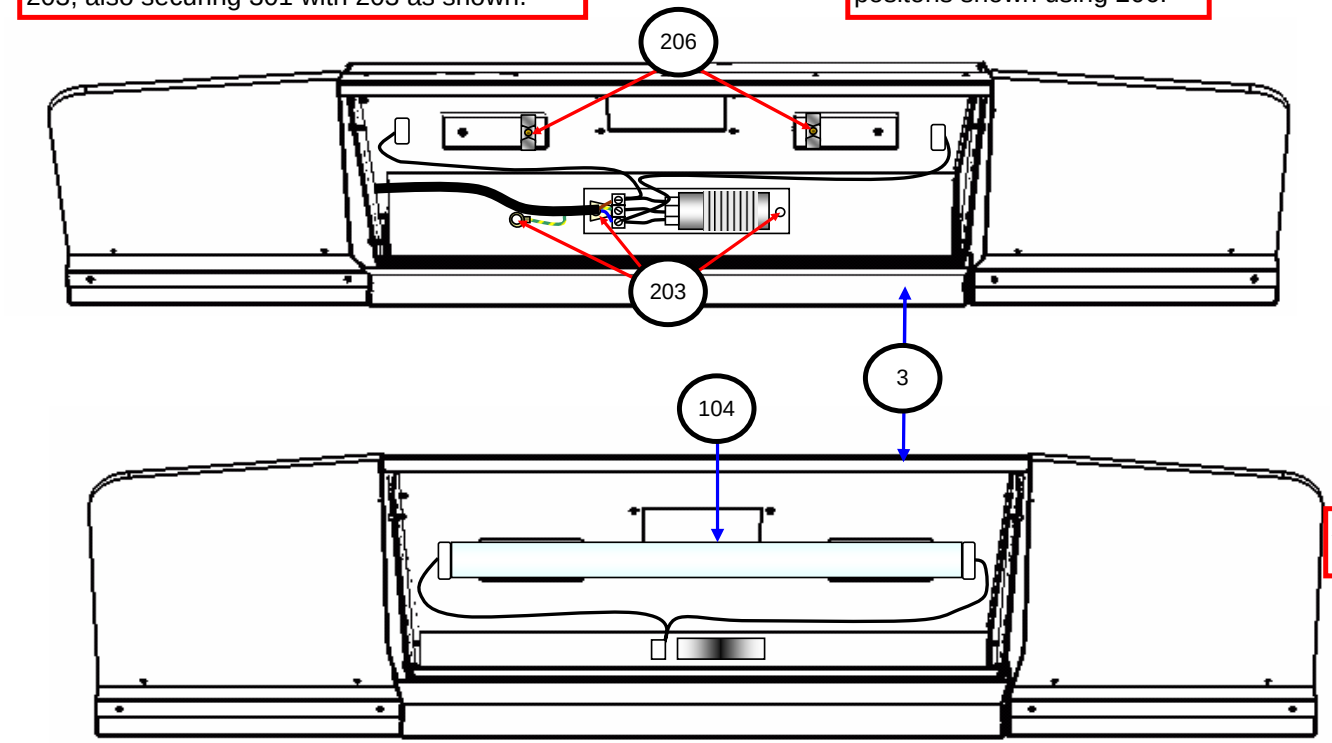

Apply 104 in to the clips from 102 as shown.

Tool List			
	PHILLIPS NO2	7MM SOCKET	

Top level No	4FD-0000UK	Level	2
Part number	ORP-3000UK		
Description	ASSY FRAME BASE		
		Page	(2 / 6)

Seq.	Part number.	Description	Qty	Sub Assy	Ord	Tool	S.T
***3	FD-0503UK	BILLBOARD BOX FD DX	1				
***104	390-5695-40-DUK	FL TUBE 40W 600L 1.5	1				
***203	050-F00400	M4 NUT FLG SER PAS	3				
***206	000-P00412-W	M4X12 MSCR W/S PAN PAS	2				

Title: FORD DX

sega work instructions

Name	Richard Ford
Date	08/05/2006
Rev.	1

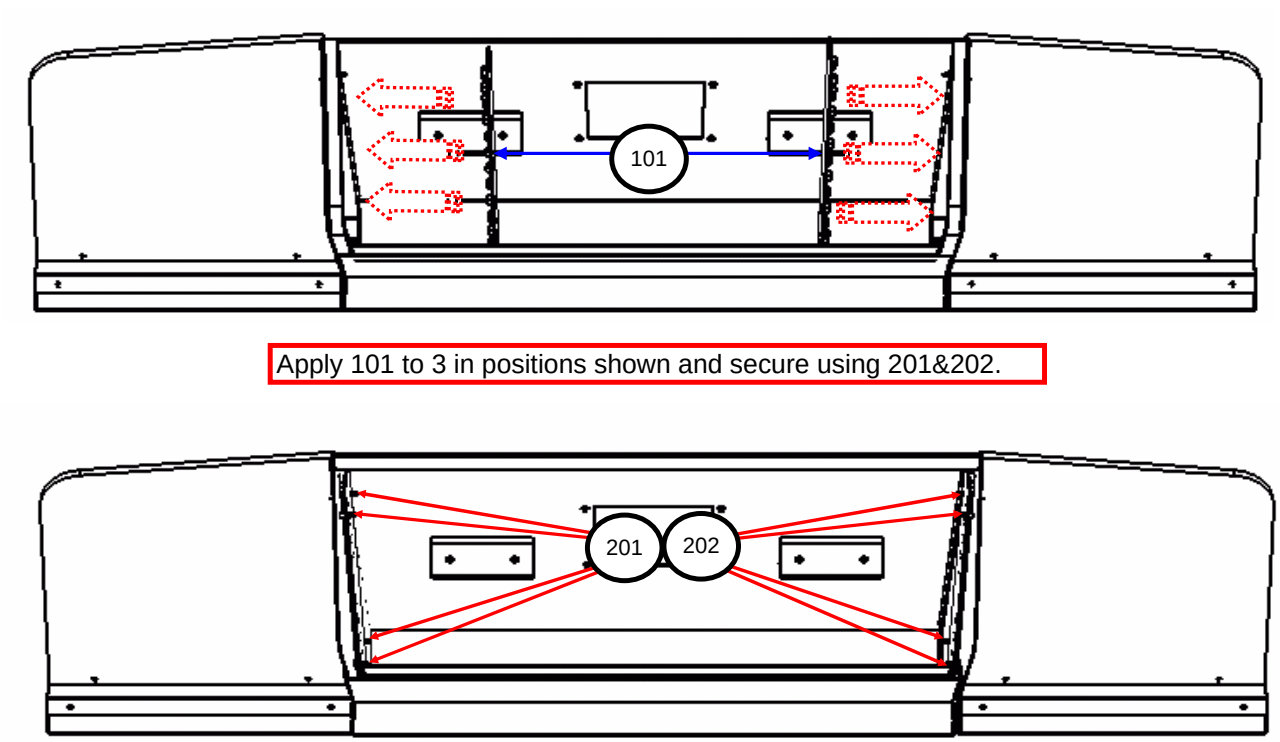

Apply 101 to 3 in positions shown and secure using 201&202.

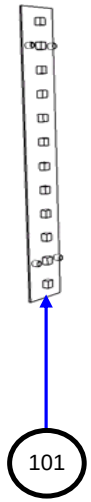

Tool List			
	5.5MM SOCKET		

Top level No	4FD-0000UK	Level	2
Part number	ORP-3000UK		
Description	ASSY FRAME BASE		
		Page	(3 / 6)

Seq.	Part number.	Description	Qty	Sub Assy	Ord	Tool	S.T
***101	FD-838-003UK	LED SEQUENCE DRIVER	2				
***201	050-F00300	M3 NUT FLG SER PAS	8				
***202	068-330808-PN	M3 WSHR 8OD FLT NYLON	8				

Title: FORD DX

sega work instructions

Name	Richard Ford
Date	08/05/2006
Rev.	1

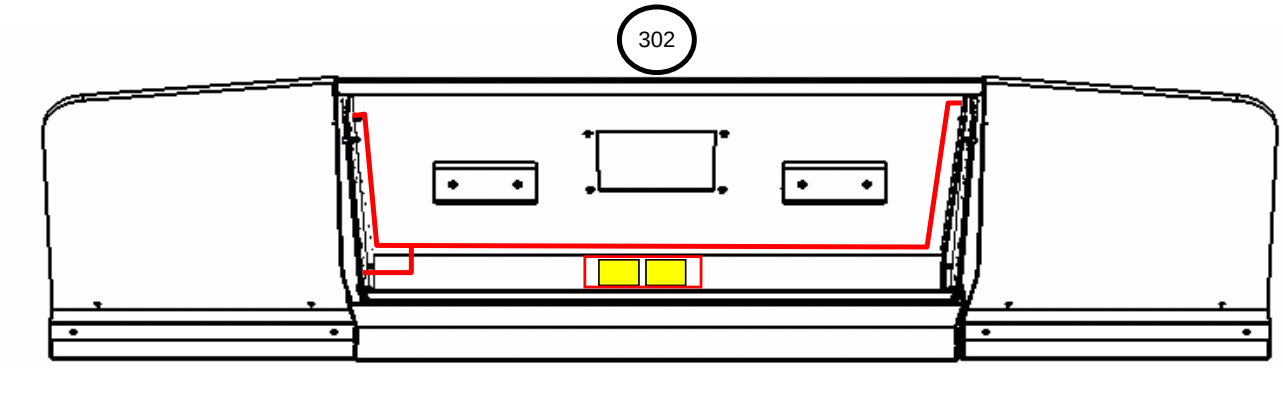

Apply 302 to101 in positions shown.

Apply 106&107 to 3 in positions showns.

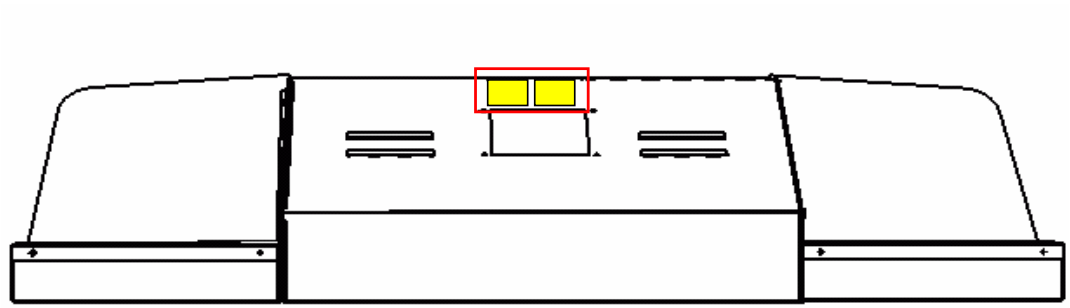

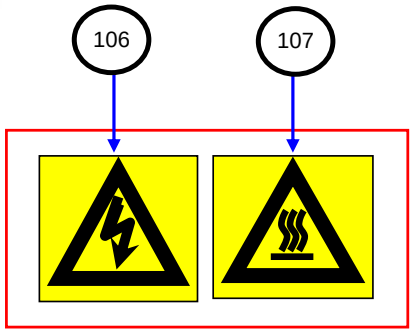

Tool List			

Top level No	4FD-0000UK	Level	2
Part number	ORP-3000UK		
Description	ASSY FRAME BASE		
		Page	(4 / 6)

Seq.	Part number.	Description	Qty	Sub Assy	Ord	Tool	S.T
***106	LB1102	STICKER DANGEROUS VOLTAGE	1				
***107	LB1104	STICKER CAUTION, HOT SURFACE	1				
***302	FD-66037UK	WH LED BILLBOARD	1				

Title: FORD DX

sega work instructions

Name	Richard Ford
Date	08/05/2006
Rev.	1

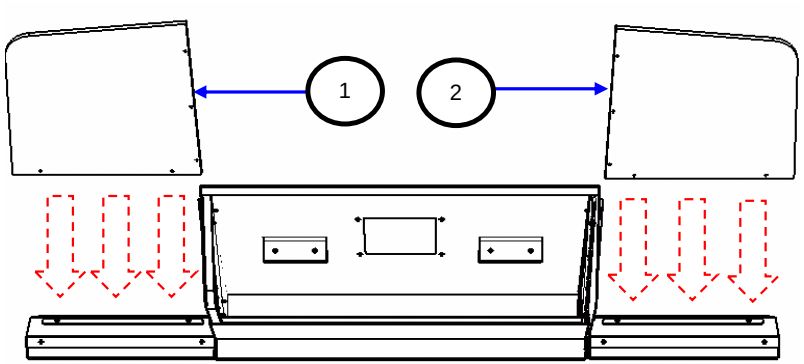

Apply 1&2 to 3 in positions shown and secure using 205.

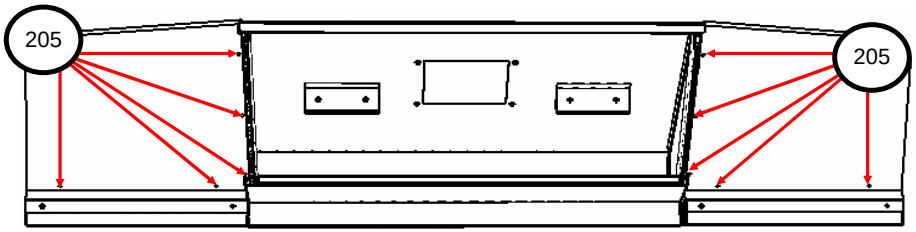

Tool List			
	PHILLIPS NO2		

Top level No	4FD-0000UK	Level	2
Part number	ORP-3000UK		
Description	ASSY FRAME BASE		
		Page	(5 / 6)

Seq.	Part number.	Description	Qty	Sub Assy	Ord	Tool	S.T
***1	FD-0501UK	PLATE L	1				
***2	FD-0502UK	PLATE R	2				
***205	000-T00416-0B	M4X16 MSCR TH BLK	10				

Title: FORD DX

sega work instructions

Name	Richard Ford
Date	08/05/2006
Rev.	1

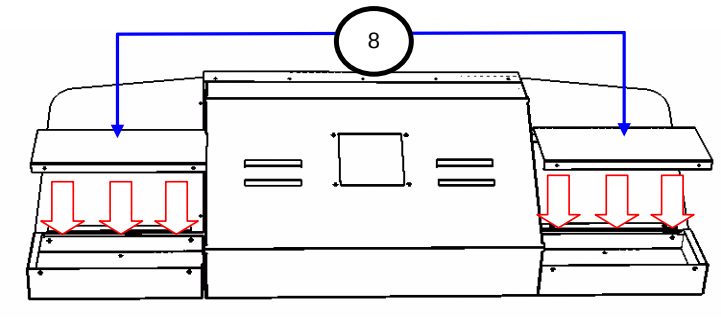

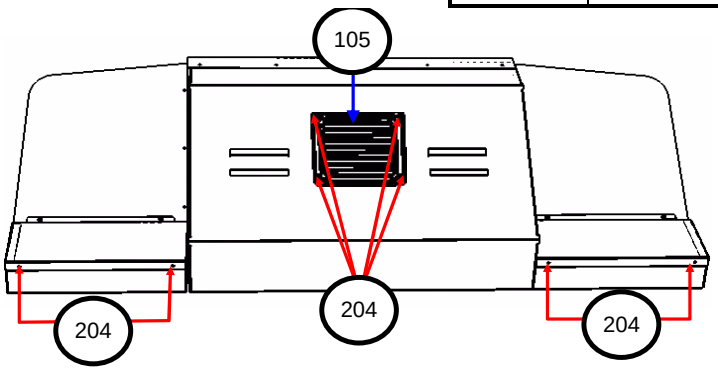

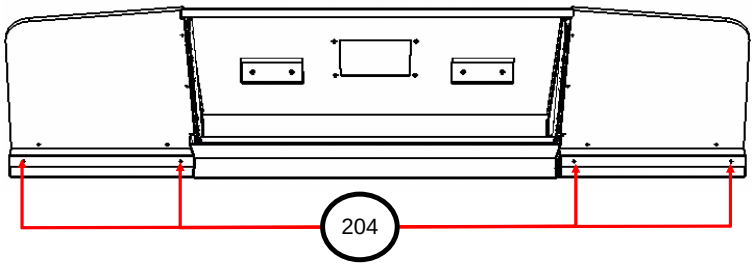

Tool List			
	PHILLIPS NO2		

Top level No	4FD-0000UK	Level	2
Part number	ORP-3000UK		
Description	ASSY FRAME BASE		
		Page	(6 / 6)

Seq.	Part number.	Description	Qty	Sub Assy	Ord	Tool	S.T
***8	FD-0505UK	COVER PLATE	2				
***105	253-5460-01	AIR VENT BLACK	1				
***204	000-T00408-0B	M4X8 MSCR TH BLK	12				

Title: FORD DX

sega work instructions

Name	Richard Ford
Date	08/05/2006
Rev.	1

Apply 5 to 4 using 202 as shown.

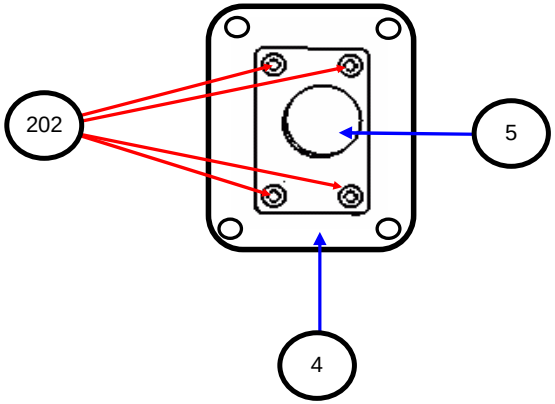

Apply 4 to 1 in position shown and secure using 201.

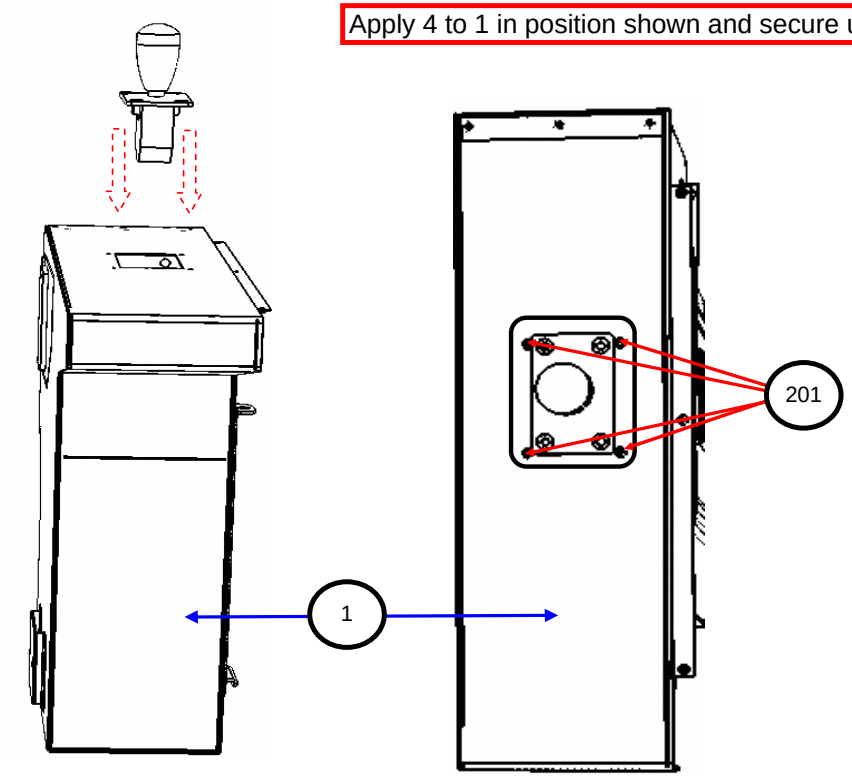

Tool List			
	T20	T25	

Top level No	4FD-0000UK	Level	2
Part number	FD-0300UK		
Description	ASSY CCT		
		Page	(1 / 5)

Seq.	Part number.	Description	Qty	Sub Assy	Ord	Tool	S.T
***1	FD-0301UK	COIN TOWER	1				
***4	RND-0039	PLATE UD SHIFTER MTG	1				
***5	610-0408-91	UP/DOWN SHIFTER AL	1				
***201	008-T00412-0B	M4X12 TMP PRF TH BLK	4				
***202	008-T00516-0B	M5X16 MSCR TH BLK	4				

Title: FORD DX

sega work instructions

Name	Richard Ford
Date	08/05/2006
Rev.	1

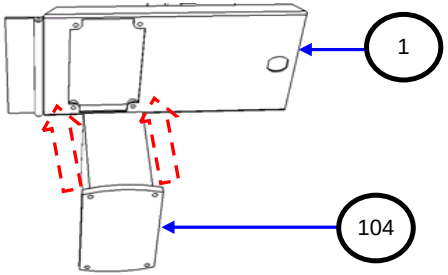

Apply 104 to 1 in position shown and secure using 201 as shown.

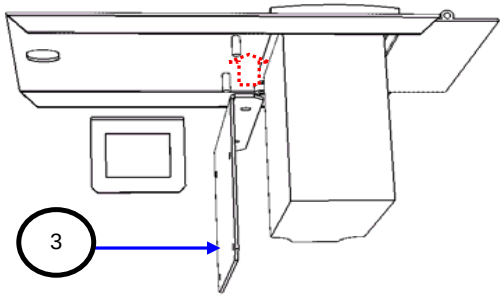

Apply 3 to 1 in position shown and secure using 203 as shown.

Apply 101 to 1 in position shown and secure as shown.

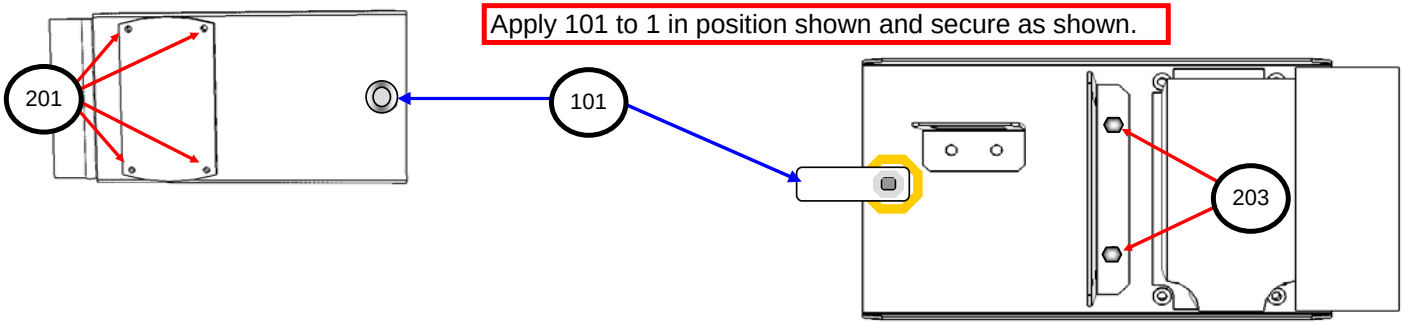

Tool List			
	T20	7MM SOCKET	

Top level No	4FD-0000UK	Level	2
Part number	FD-0300UK		
Description	ASSY CCT		
		Page	(2 / 5)

Seq.	Part number.	Description	Qty	Sub Assy	Ord	Tool	S.T
***3	RND-0086	BRKT EXCEL BD FD	1				
***101	220-5575UK	LOCK (J9117) KEY TO LIKE 22MM	1				
***104	220-5610-FP	SR3 FRONT PLATE	1				
***201	008-T00412-0B	M4X12 TMP PRF TH BLK	8				
***203	050-F00400	M4 NUT FLG SER PAS	2				

Title: FORD DX

sega work instructions

Name	Richard Ford
Date	08/05/2006
Rev.	1

Apply 103 to 1 in position shown (clip-in)

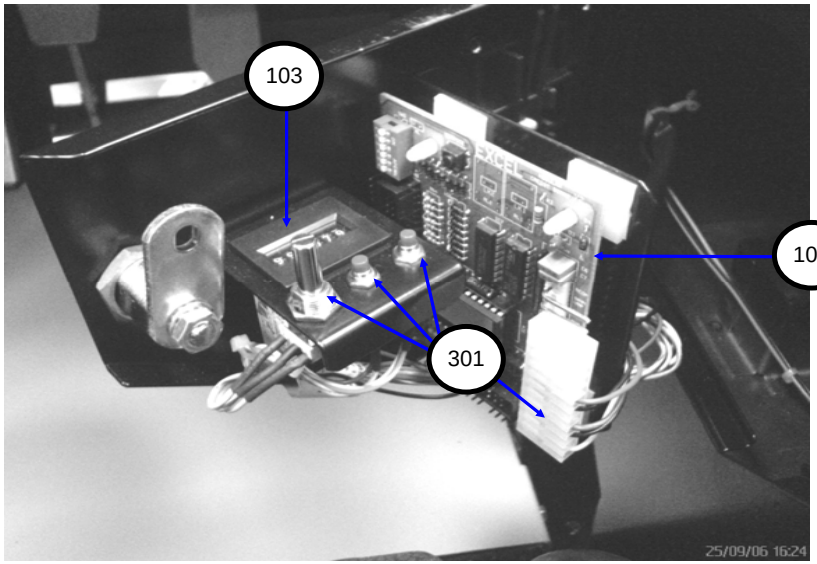

Apply 106 to 102 as shwon then fit to 3 in location shown.(clip-in).

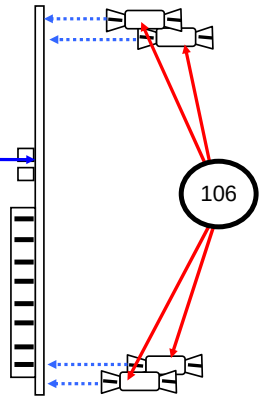

Please note you have the volume on the outside then the test button is next to the volume (purple&white) then service on the inside(orange&white).

Apply 301 to 1 in position shown.

Tool List			
	11MM SOCKET	8MM SOCKET	

Top level No	4FD-0000UK	Level	2
Part number	FD-0300UK		
Description	ASSY CCT		
		Page	(3 / 5)

Seq.	Part number.	Description	Qty	Sub Assy	Ord	Tool	S.T
***102	EP1380-R	CREDIT BD EXCEL	1				
***103	220-5643UK	COIN METER SMALL 12VDC	1				
***106		STANDOFF SMALL	4				
***301	FD-66026UK	WH I/O BD	1				

Title: FORD DX

sega work instructions

Name	Richard Ford
Date	08/05/2006
Rev.	1

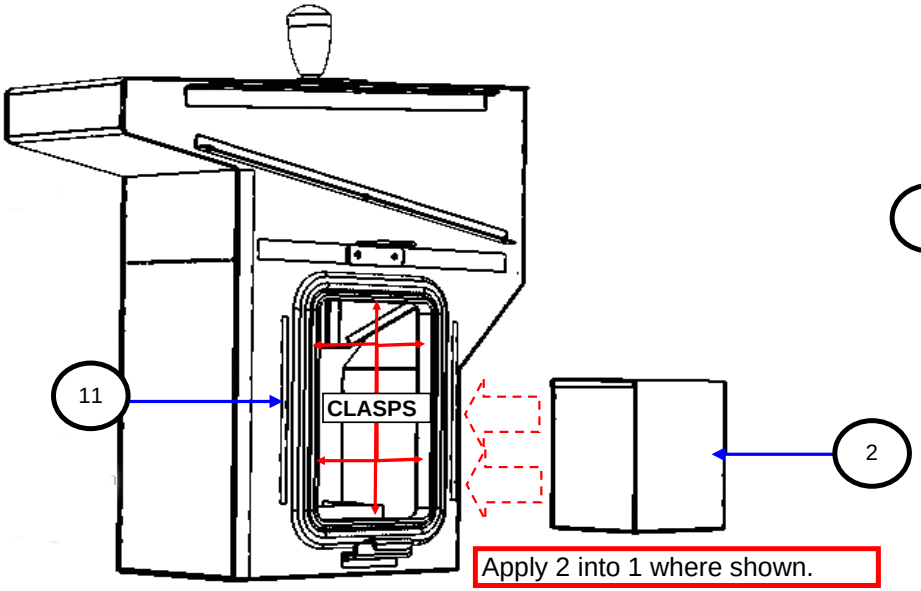

Apply 2 into 1 where shown.

Apply 11 to 1 securing with the clasps provided with the door.

Apply 7 to 1 in position shown securing with 204.

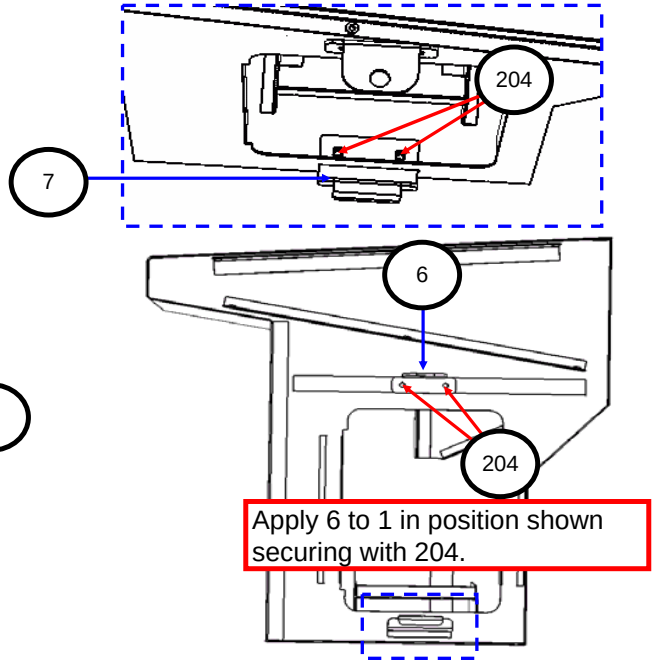

Apply 6 to 1 in position shown securing with 204.

Tool List			
	8MM SOCKET	10MM SOCKET	

Top level No	4FD-0000UK	Level	2
Part number	FD-0300UK		
Description	ASSY CCT		
		Page	(4 / 5)

Seq.	Part number.	Description	Qty	Sub Assy	Ord	Tool	S.T
***2	FD-0303UK	CASH BOX	1				
***6	PTR-0004UK	LOCK BAR A	1				
***7	PTR-0005UK	LOCK BAR B	1				
***11	220-5725-03B	DOOR SINGLE MINI H SECURITY BLK	1				
***204	030-000620-0B	M6X20 HEX BLT W/'S BLK	4				

Title: FORD DX

sega work instructions

Name	Richard Ford
Date	08/05/2006
Rev.	1

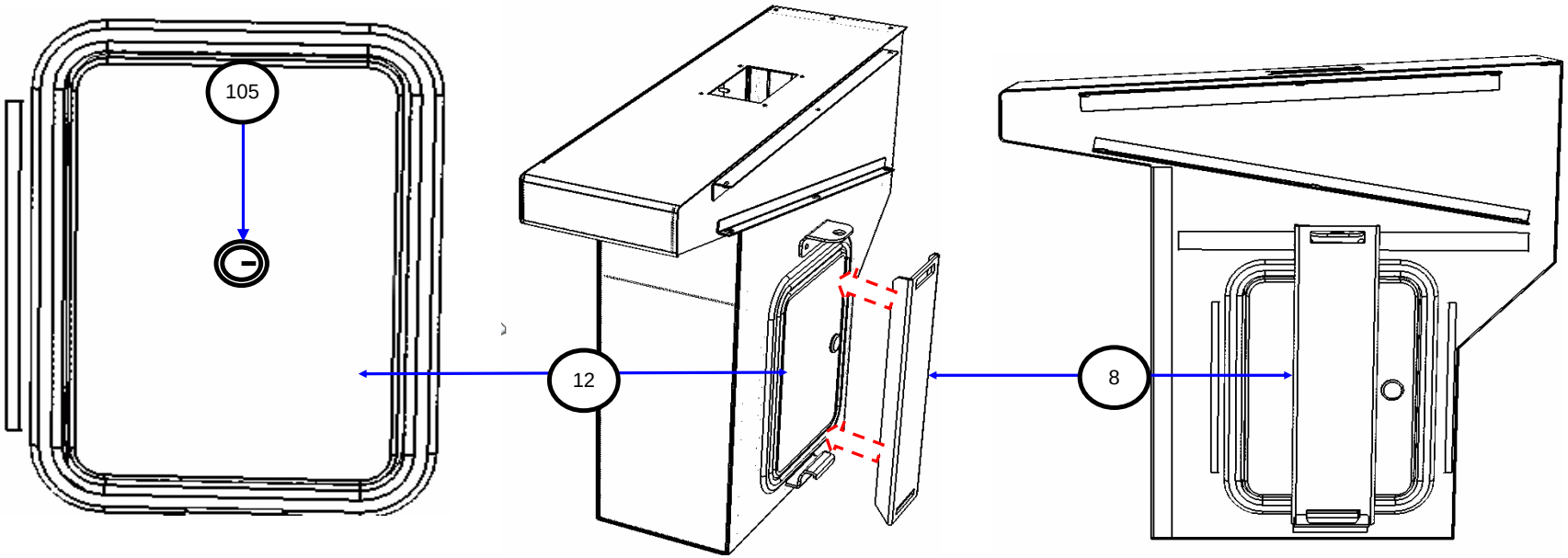

Apply 105 to 12 in position shown and secure.

Hook 8 into place over 12 as shown.

Apply 12 to 1 in position shown and lock.

Tool List			
	BOX SPANNER	11MM SOCKET	

Top level No	4FD-0000UK	Level	2
Part number	FD-0300UK		
Description	ASSY CCT		
		Page	(5 / 5)

Seq.	Part number.	Description	Qty	Sub Assy	Ord	Tool	S.T
***8	PTR-0006-01UK	SECURITY BAR	1				
***12	220-5725-05B	DOOR SINGLE MINI H SECURITY BLK	1				
***105	220-5574-110UK	LOCK-KEY DIFFERS 11M W/O CAM	1				

Title: FORD DX

sega work instructions

Name	Richard Ford
Date	08/08/2006
Rev.	1

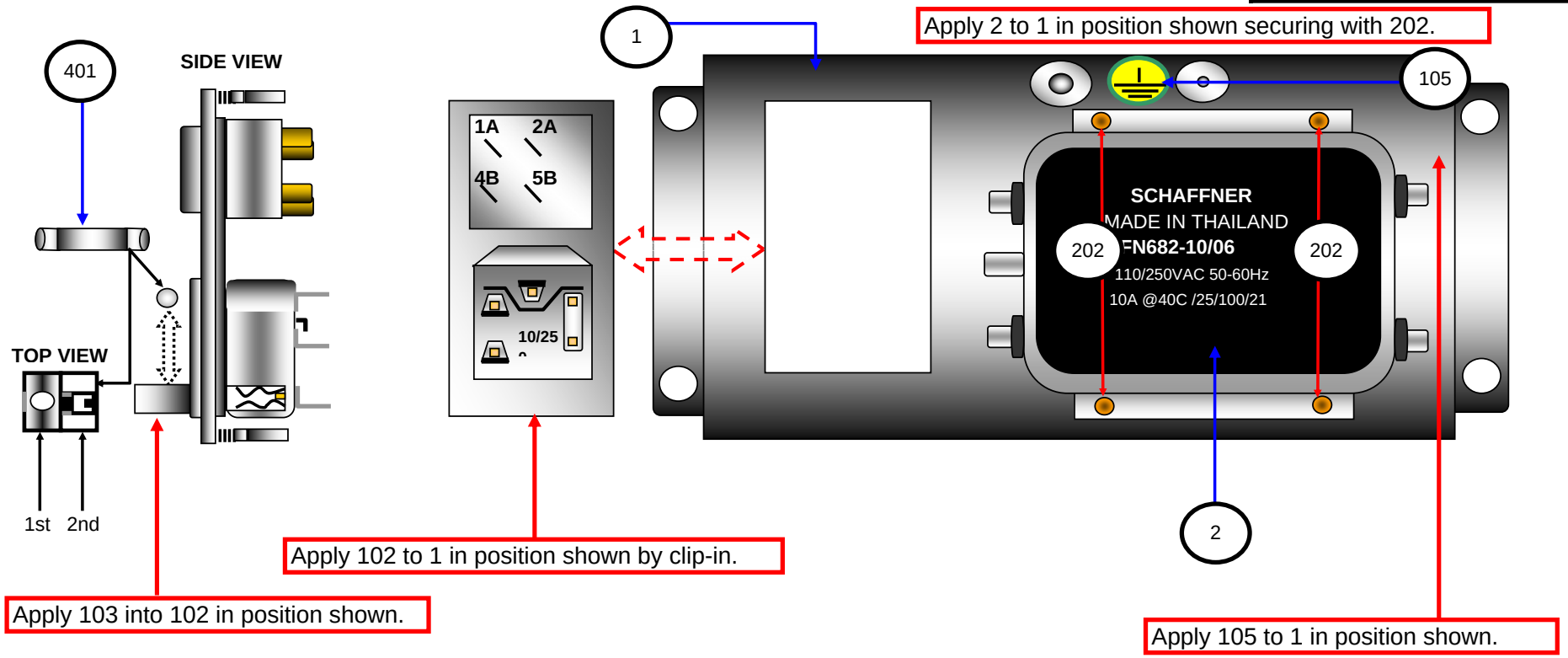

Tool List			
	PHILLIPS NO1		

Top level No	4FD-0000UK	Level	2
Part number	FD-0660UK		
Description	ASSY AC UNIT		

Seq.	Part number.	Description	Qty	Sub Assy	Ord	Tool	S.T
***1	HDF-0661UK	BRKT AC HDF	1				
***2	EP1382	FILTER SCHAFFNER FN682-10/06	1				
***102	EP1387	IEC FUSED INLET	1				
***105	LB1096	STICKER EARTH PRIMARY	1				
***202	000-P00312-W	MSCR PH W/FS M3X12	4				
***401	514-5078-5000	5 AMP T CERAMIC FUSE	1				

Title: FORD DX

sega work instructions

Name	Richard Ford
Date	08/08/2006
Rev.	1

Title: FORD DX

sega work instructions

Name	Richard Ford
Date	08/08/2006
Rev.	1

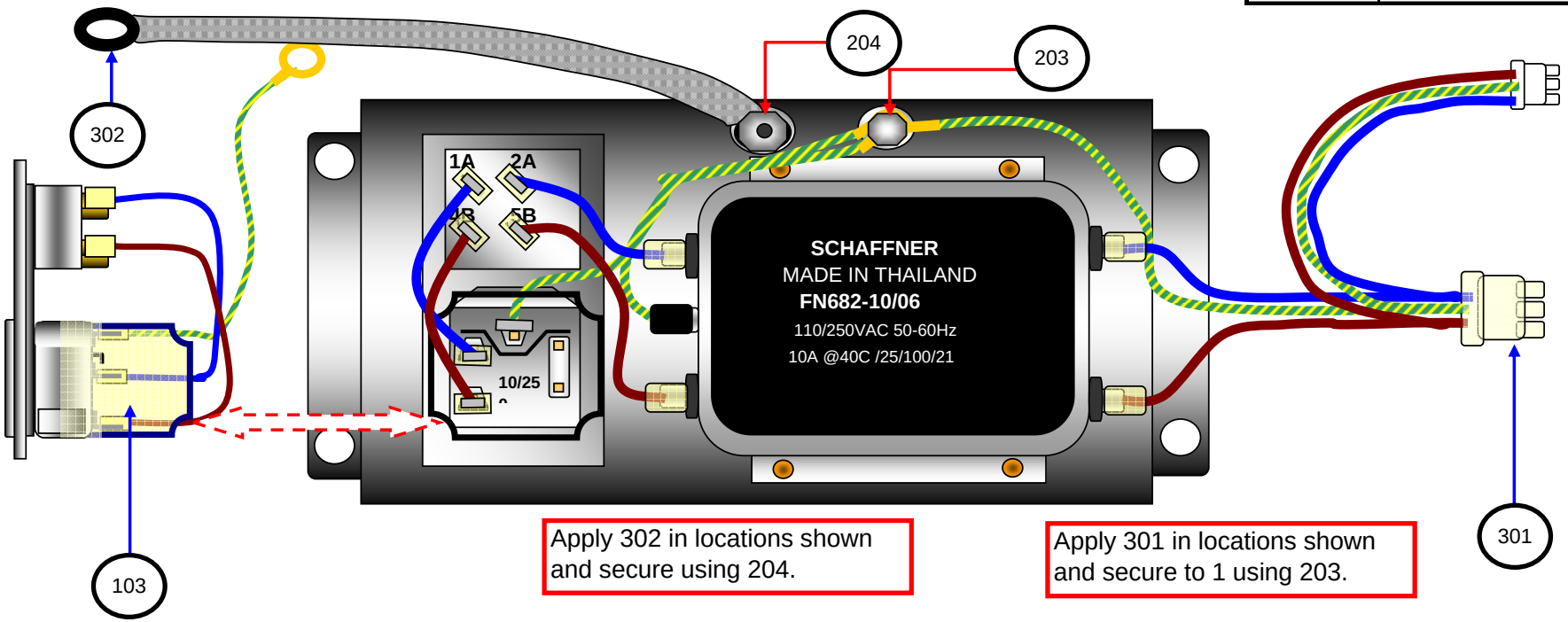

Apply 302 in locations shown and secure using 204.

Apply 301 in locations shown and secure to 1 using 203.

Apply 103 to102 in location shown and shrink.

Please note that the harness shown will be shielded and are not shown for illustration purposes.

Tool List			
	7MM SOCKET	10MM SOCKET	
	HEAT GUN		

Top level No	4FD-0000UK	Level	2
Part number	FD-0660UK		
Description	ASSY AC UNIT		
		Page	(2 / 2)

Seq.	Part number.	Description	Qty	Sub Assy	Ord	Tool	S.T
***103	310-5029-D508	HEAT SHRINK SLEEVING 50.8D	5CM				
***203	050-F00400	M4 NUT FLG SER PAS	1				
***204	050-F00600	M6 NUT FLG SER PAS	1				
***301	FD-66032UK	WH AC BRKT FD	1				
***302	FD-66042UK	WH EARTH BRAID STRAP	1				

Title: FORD DX

sega work instructions

Name	Richard Ford
Date	08/05/2006
Rev.	1

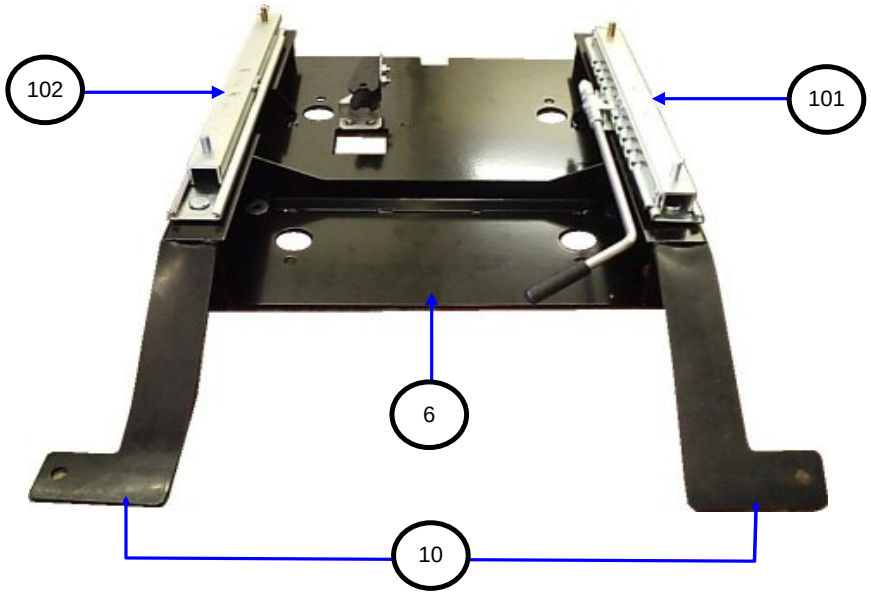

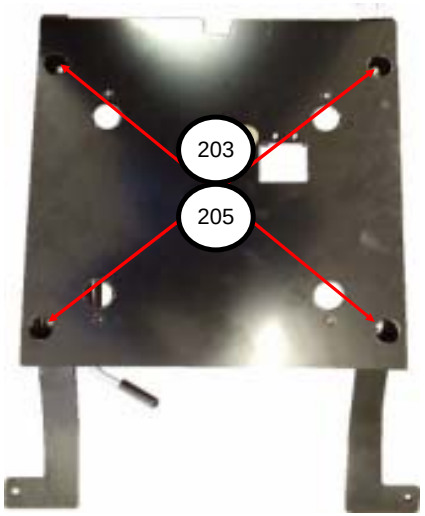

Fit 10 in between 6,101&102 in positions shown then secure 101&102 to 6 using 203&205 as shown.

Please note the orientation of 10.

Also note the position of 101 and 102.

Tool List			
	13MM SOCKET		

Top level No	4FD-0000UK	Level	2
Part number	FD-2400UK		
Description	ASSY SEAT		
		Page	(1 / 10)

Seq.	Part number.	Description	Qty	Sub Assy	Ord	Tool	S.T
***6	NCR-2405	SEAT SLANT TRAY	1				
***10	STC-1612	PROTECT RUBBER	2				
***101	601-9059-91	SEAT RAIL L	1				
***102	601-9060-91	SEAT RAIL R	1				
***203	050-U00800	M8 NUT NYLOK PAS	8				
***205	068-852216	M8 WSHR 22OD FLT PAS	20				

Title: FORD DX

sega work instructions

Name	Richard Ford
Date	08/05/2006
Rev.	1

Place 12&13 into 2 in positions shown.

Apply 18 to 2 and secure using 106 as shown.

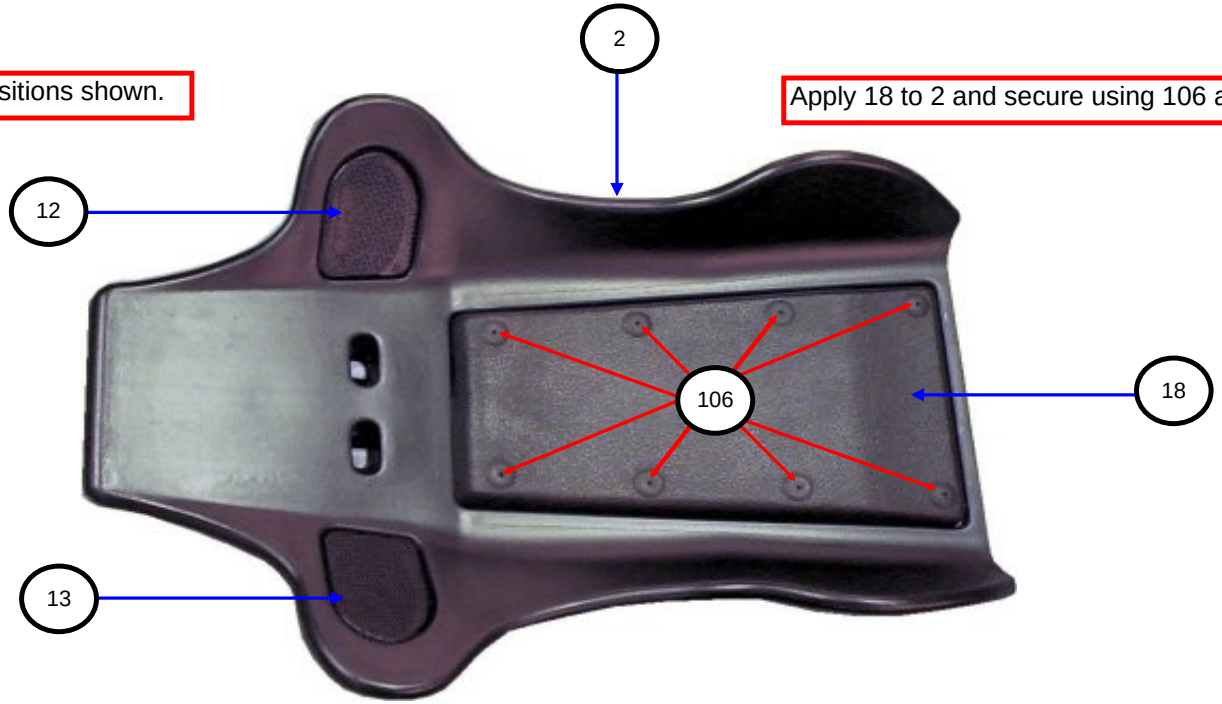

Tool List			
	MALLET		

Top level No	4FD-0000UK	Level	2
Part number	FD-2400UK		
Description	ASSY SEAT		
		Page	(2 / 10)

Seq.	Part number.	Description	Qty	Sub Assy	Ord	Tool	S.T
***2	SPG-2401-AUK	UPPER SEAT BLANK	1				
***12	STC-1608	SPEAKER NET L	1				
***13	STC-1609	SPEAKER NET R	1				
***18	SPG-2401-BUK	UPPER SEAT INSERT	1				
***106	280-K02529-WX	DRIVE FASTENER 25FH 24L 7.9DIA	8				

Title: FORD DX

sega work instructions

Name	Richard Ford
Date	08/05/2006
Rev.	1

Apply 16 to 104 as shown and secure using 210.

Fit 21 to the rear of 104 as shown.

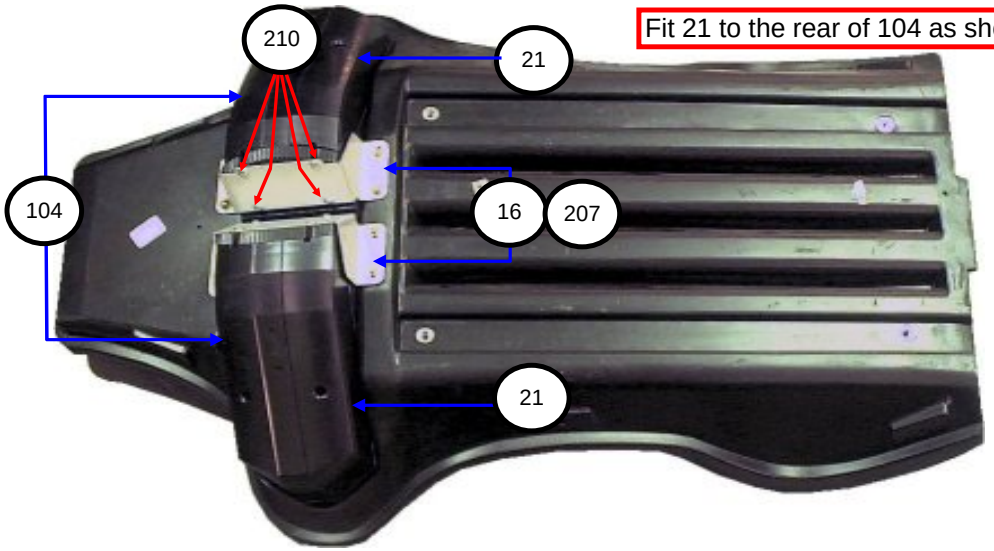

Apply 16 to 2 in positions shown securing with 207 as shown.

Tool List			
	PHILLIPS NO2		

Top level No	4FD-0000UK	Level	2
Part number	FD-2400UK		
Description	ASSY SEAT		
		Page	(3 / 10)

Seq.	Part number.	Description	Qty	Sub Assy	Ord	Tool	S.T
***16	STC-1607	SP MOUNT BRKT	2				
***21	SRT-2409	SHOULDER PAD	2				
***104	130-5162-01	GULL BOX SPEAKER	2				
***207	000-P00410-W	M4X10 MSCR PAN W/FS PAS	8				
***210	012-P03512-F	N6X1/2" S/TAP FLG PAS	8				

Title: FORD DX

sega work instructions

Name	Richard Ford
Date	08/05/2006
Rev.	1

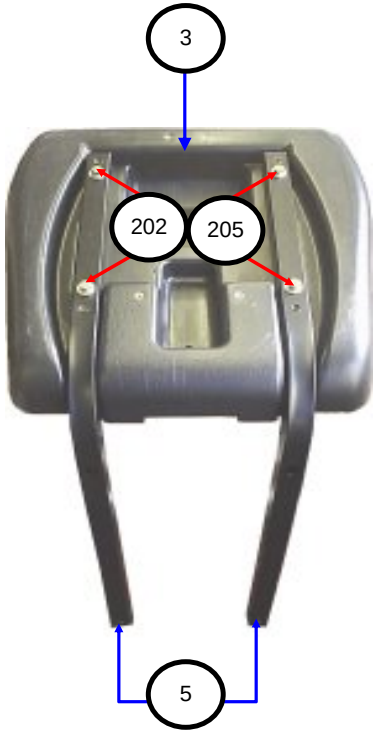

Apply 5 to 3 in positions shown and secure using 202&205.

Apply 5 to 2 in positions shown and secure using 202&205.

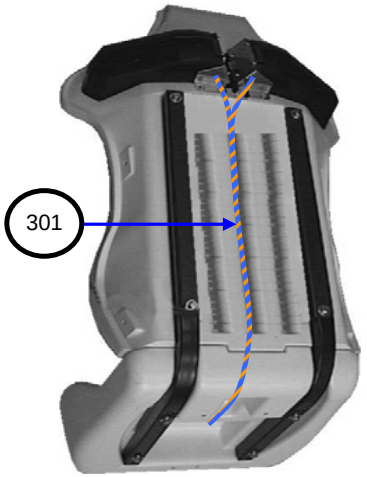

Apply 301 to104 in positions shown.

Tool List			
	13MM SOKCET		

Top level No	4FD-0000UK	Level	2
Part number	FD-2400UK		
Description	ASSY SEAT		
		Page	(4 / 10)

Seq.	Part number.	Description	Qty	Sub Assy	Ord	Tool	S.T
***3	SPG-2402-AUK	LOWER SEAT BLANK	1				
***5	SRT-2402UK	SEAT FRAME	2				
***202	030-000850-SB	M8X50 BLT W/S BLK	8				
***205	068-852216	M8 WSHR 22OD FLT PAS	8				
***301	FD-66009UK	WH SPRK REAR A	1				

Title: FORD DX

sega work instructions

Name	Richard Ford
Date	08/05/2006
Rev.	1

Apply 19 to 3 in position shown and secure using 106.

Tool List			
	MALLET		

Top level No	4FD-0000UK	Level	2
Part number	FD-2400UK		
Description	ASSY SEAT		
		Page	(5 / 10)

Seq.	Part number.	Description	Qty	Sub Assy	Ord	Tool	S.T
***19	SPG-2402-BUK	LOWER SEAT INSERT	1				
***106	280-K02529-WX	DRIVE FASTNER 25FH 24L 7.9DIA	10				

Title: FORD DX

sega work instructions

Name	Richard Ford
Date	08/05/2006
Rev.	1

Apply 6 to the underneath of 3 in position shown and secure using 201&205 as shown.

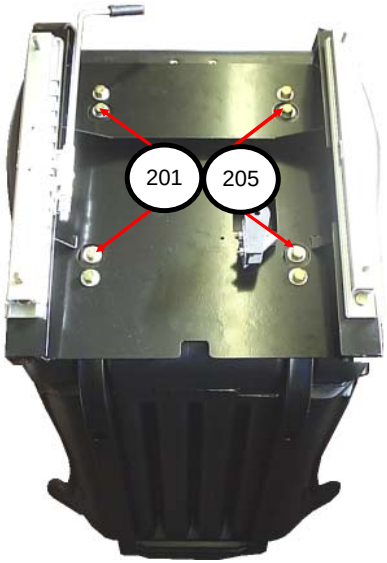

Fit 9 to 6 using 207 then apply 108 to 9 securing with 209.

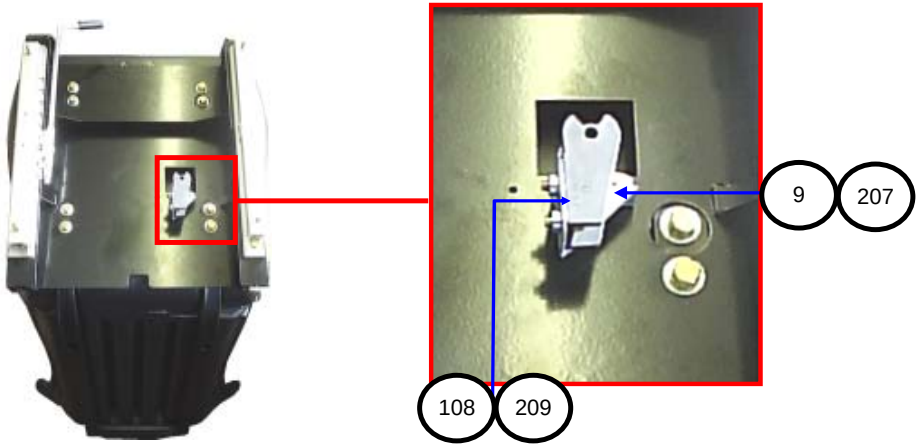

Tool List			
	13MM SOCKET		
	PHILLIPS NO2		

Top level No	4FD-0000UK	Level	2
Part number	FD-2400UK		
Description	ASSY SEAT		
		Page	(6 / 10)

Seq.	Part number.	Description	Qty	Sub Assy	Ord	Tool	S.T
***4	ORP-2404UK	SEAT BASE	1				
***9	FRI-3309	CABLE BEAR BRKT	1				
***109	280-A00900-A	ROUTER TWIST D9 ADH	4				
***202	030-000850-SB	M8X50 BLT W/S BLK	8				
***206	000-T00408-0B	M4X8 MSCR TH BLK	4				
***209	000-T00616-0B	M6X16 MSCR TH BLK	2				

Title: FORD DX

sega work instructions

Name	Richard Ford
Date	08/05/2006
Rev.	1

Feed 302 through the remainder of 108 as shown.

Then secure 108 to 4 in position shown using 209.

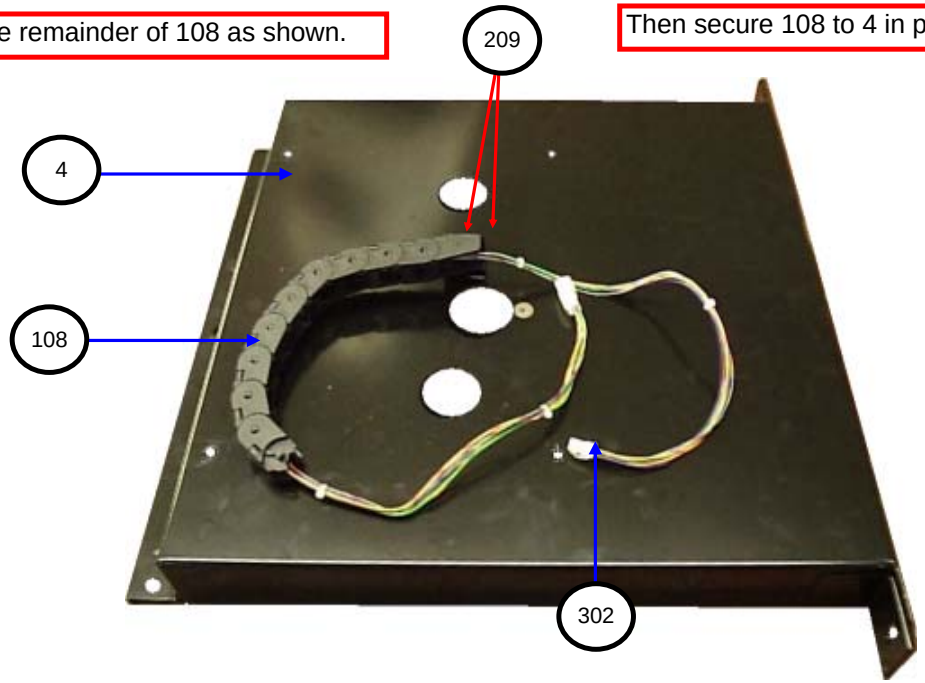

Tool List			
	PHILLIPS NO2		

Top level No	4FD-0000UK	Level	2
Part number	FD-2400UK		
Description	ASSY SEAT		
		Page	(7 / 10)

Seq.	Part number.	Description	Qty	Sub Assy	Ord	Tool	S.T
***4	ORP-2404UK	SEAT BASE	1				
***108	601-6981-009	CABLE BEAR L=009	1				
***209	000-T00616-0B	M6X16 MSCR TH BLK	2				
***301	ORP-60031UK	WH SPKR REAR EXT	1				

Title: FORD DX

sega work instructions

Name	Richard Ford
Date	08/05/2006
Rev.	1

Offer 6 to 4 align the 2 rear fixing points
before clipping the 108 into position.
Make all connections good.

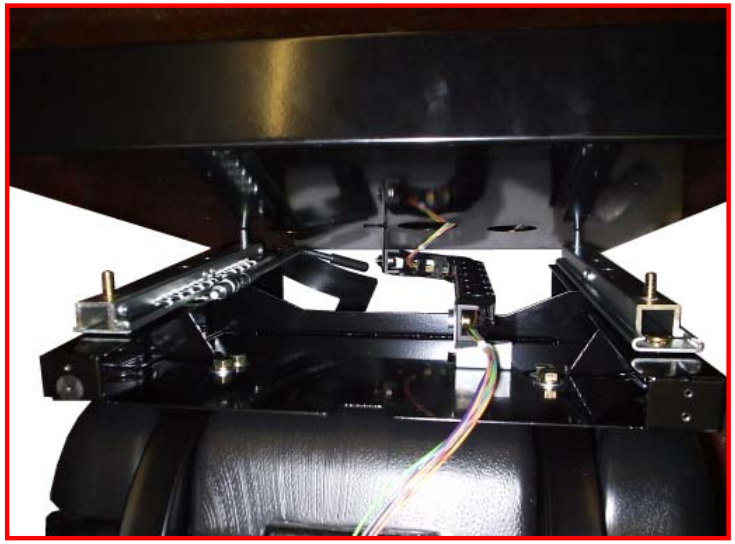

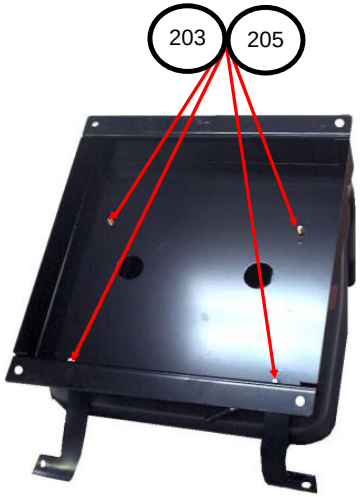

Apply 6 to 4 and secure using 203&205 as shown.

Tool List			
	13MM SOCKET		

Top level No	4FD-0000UK	Level	2
Part number	FD-2400UK		
Description	ASSY SEAT		
		Page	(8 / 10)

Seq.	Part number.	Description	Qty	Sub Assy	Ord	Tool	S.T
***203	050-U00800	M8 NUT NYLOK PAS	8				
***205	068-852216	M8 WSHR 22OD FLT PAS	8				

Title: FORD DX

sega work instructions

Name	Richard Ford
Date	08/05/2006
Rev.	1

Apply 1 to 2 in position shown and secure using 103.

Please note that the cover of 1 will be blue.

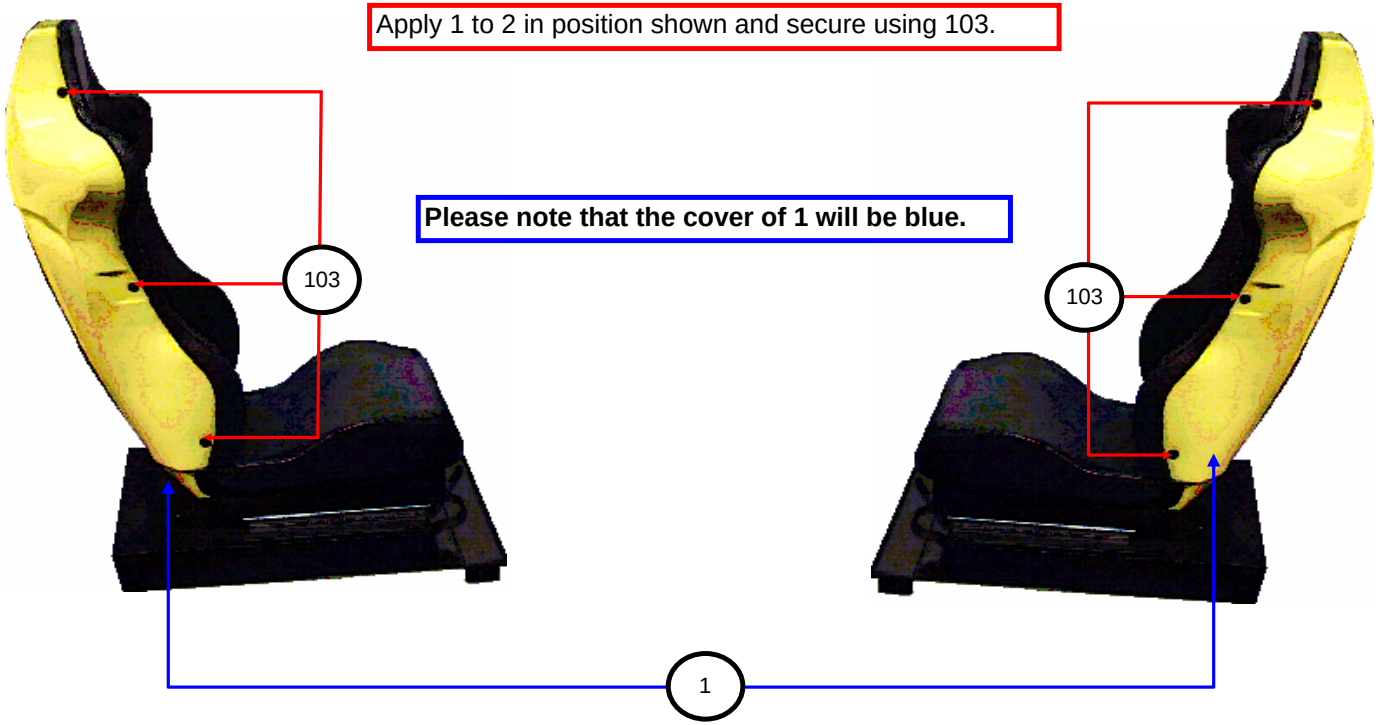

Tool List			
	PHILLIP NO2	MALLET	

Top level No	4FD-0000UK	Level	2
Part number	FD-2400UK		
Description	ASSY SEAT		
		Page	(9 / 10)

Seq.	Part number.	Description	Qty	Sub Assy	Ord	Tool	S.T
***1	FD-2401-AUK	SEAT REAR COVER BLANK	1				
***103	280-5297	SCRIVET 8 1K31	6				

Title: FORD DX

sega work instructions

Name	Richard Ford
Date	08/05/2006
Rev.	1

Apply to 7 the front of the seat and secure using 206.

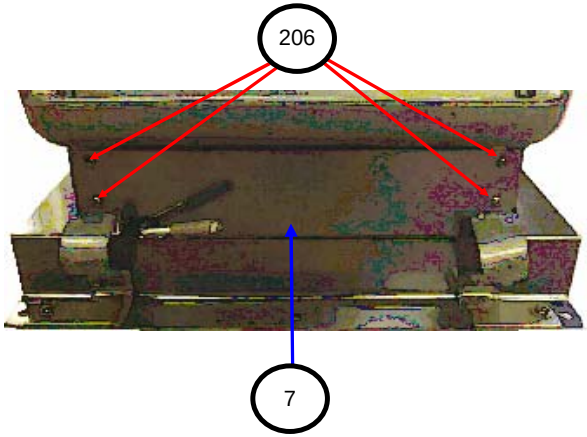

Apply to 8 the front of the seat and secure using 206.

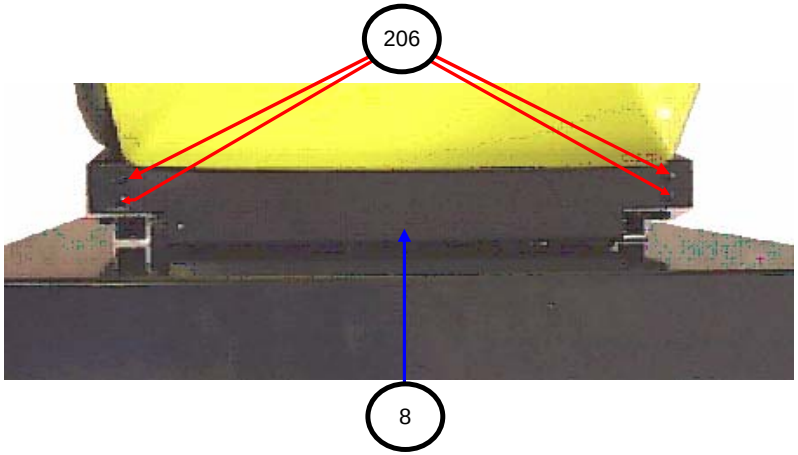

Tool List			
	PHILLIPS NO2		

Top level No	4FD-0000UK	Level	2
Part number	FD-2400UK		
Description	ASSY SEAT		
		Page	(10 / 10)

Seq.	Part number.	Description	Qty	Sub Assy	Ord	Tool	S.T
***7	FRI-3307	FRONT TRAY COVER	1				
***8	NCR-2406	REAR TRAY COVER	1				
***206	000-T00408-0B	M4X8 MSCR TH BLK	8				

Title: FORD DX

sega work instructions

Name	Richard Ford
Date	08/05/2006
Rev.	1

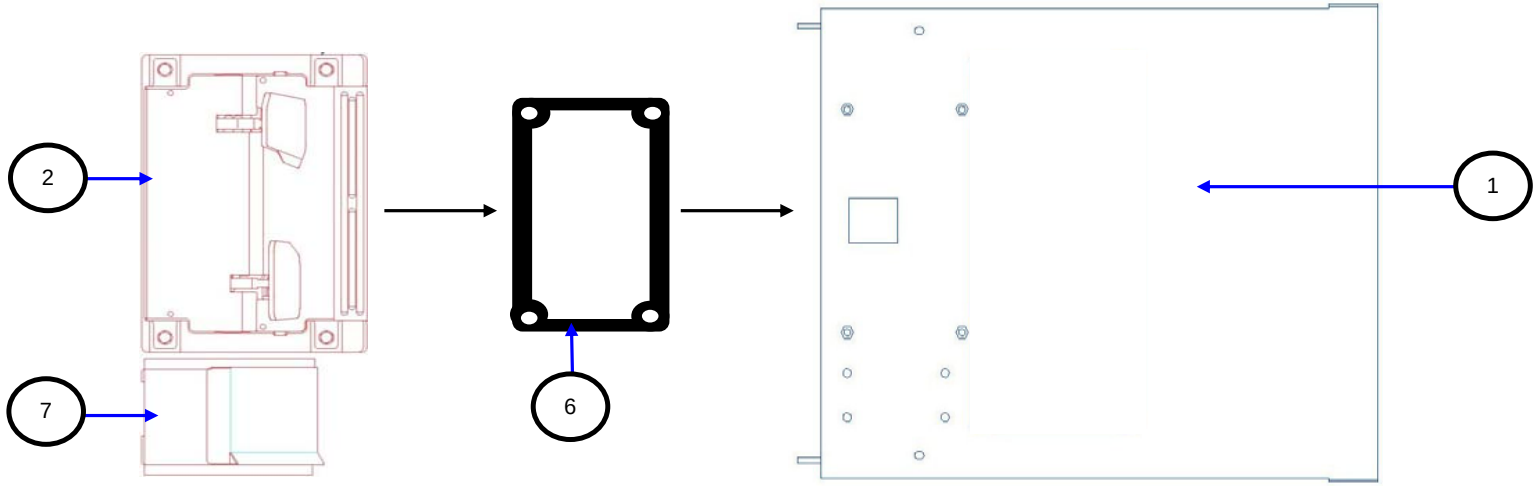

Apply 6 to 1 then 2 over 6 and secure with 201&202 as shown.

Apply 7 to 1 and secure from underneath using 201&203.

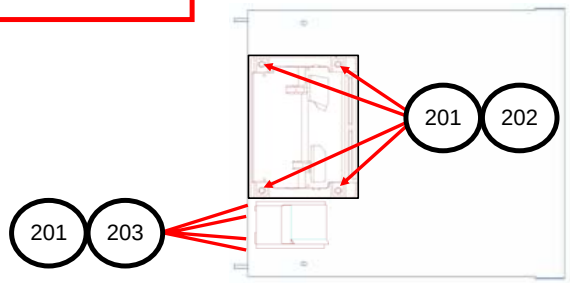

Tool List			
	13MM SOCKET		

Top level No	4FD-0000UK	Level	2
Part number	ORP-3000UK		
Description	ASSY FRAME BASE		
		Page	(1 / 1)

Seq.	Part number.	Description	Qty	Sub Assy	Ord	Tool	S.T
****2	SPG-2200	ASSY ACCEL & BRAKE	1				
****4	SPG-2222UK	ANTI FINGER TRAP PLATE LEFT	1				
****5	SPG-2223UK	ANTI FINGER TRAP PLATE RIGHT	1				
****6	SPG-2224UK	PEDAL GASKET	1				
****7	FRI-2201	FOOT REST FRI	1				
****201	068-852216-0B	M8 WSHR 22OD FLT BLK	8				
****202	030-000820-SB	M8X20 BLT W/S BLK	4				

Title: FORD DX

sega work instructions

Name	Richard Ford
Date	08/05/2006
Rev.	1

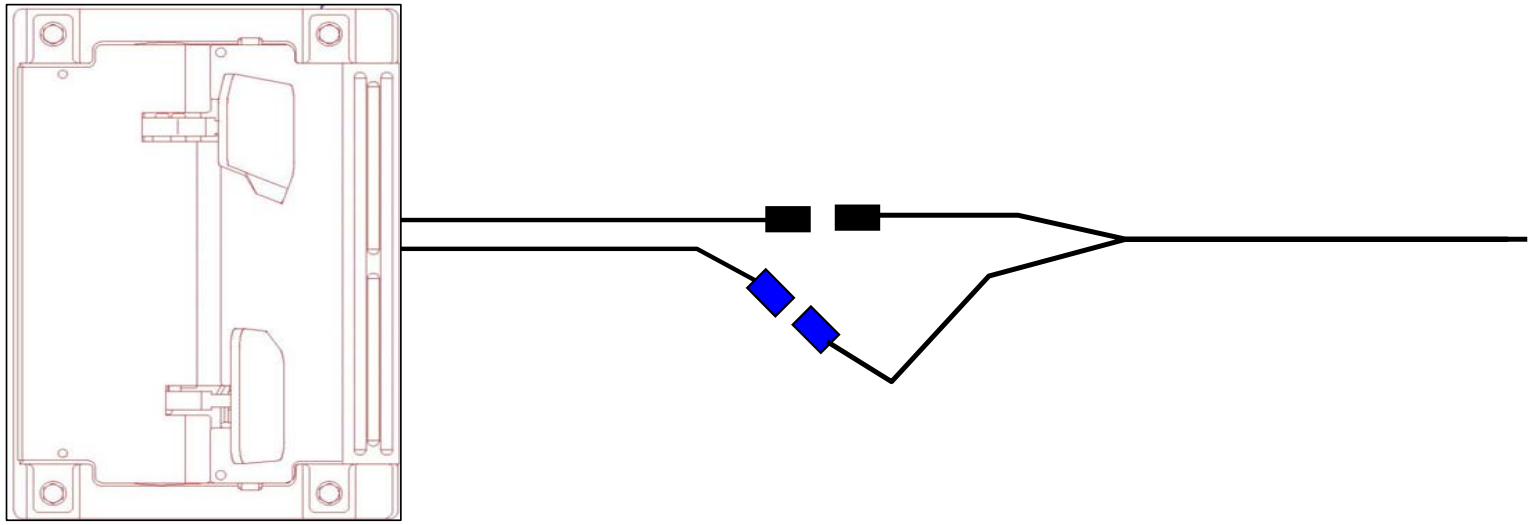

Tool List			

Top level No	4FD-0000UK	Level	2
Part number	ORP-3000UK		
Description	ASSY FRAME BASE		
		Page	(2 / 1)

Seq.	Part number.	Description	Qty	Sub Assy	Ord	Tool	S.T

Title: FORD DX

sega work instructions

Name	Richard Ford
Date	08/05/2006
Rev.	1

Apply 6&7 to 3 in positions shown.

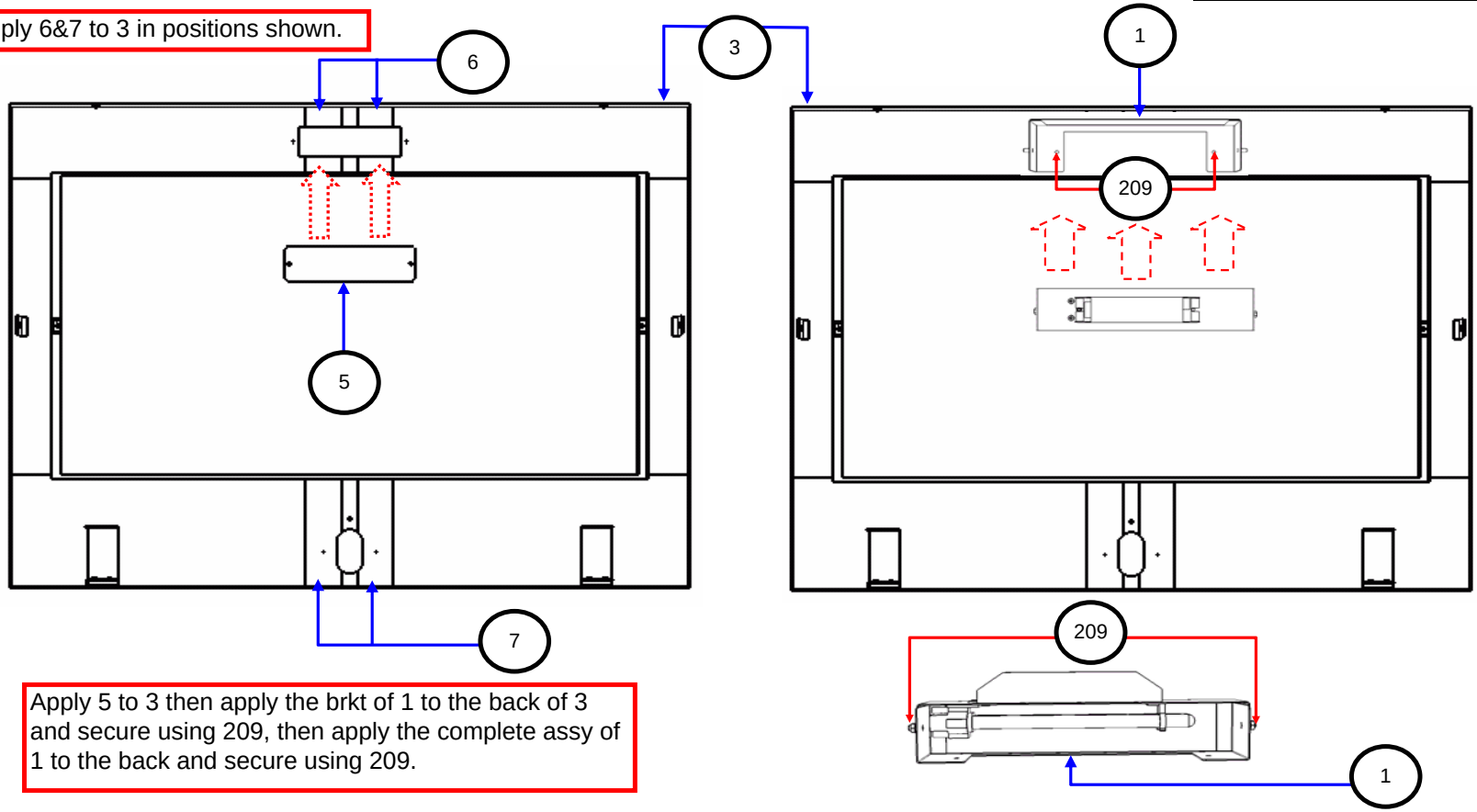

Apply 5 to 3 then apply the brkt of 1 to the back of 3 and secure using 209, then apply the complete assy of 1 to the back and secure using 209.

Tool List			
	7MM SOCKET		

Top level No	4FD-0000UK	Level	2
Part number	FD-0530UK		
Description	ASSY MASK FD		
		Page	(1 / 2)

Seq.	Part number.	Description	Qty	Sub Assy	Ord	Tool	S.T
***1	FD-XXXXUK	ASSY COMPACT FL 12VDC	1				
***3	FD-0531UK	MONITOR MASK FD DX	1				
***5	FD-0533UK	SEGA LOGO PLATE	1				
***6	FD-0534UK	STKR STRIP UPPR SMALL	1				
***7	FD-0535UK	STKR STRIP LOWER MED	1				
**203	050-F00400	M4 NUT FLG SER PAS	2				

Title: FORD DX

sega work instructions

Name	Richard Ford
Date	08/05/2006
Rev.	1

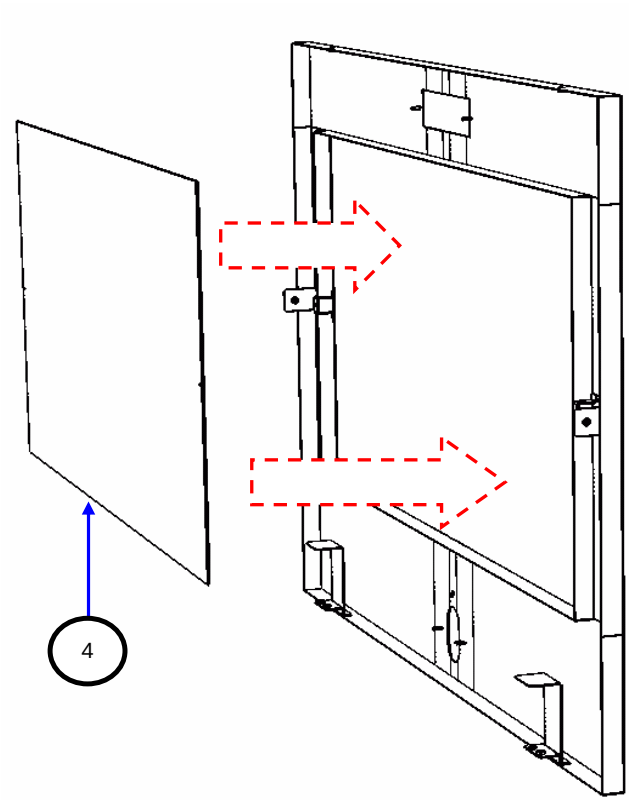

Apply 4 to 3 in position shown and secure using 204.

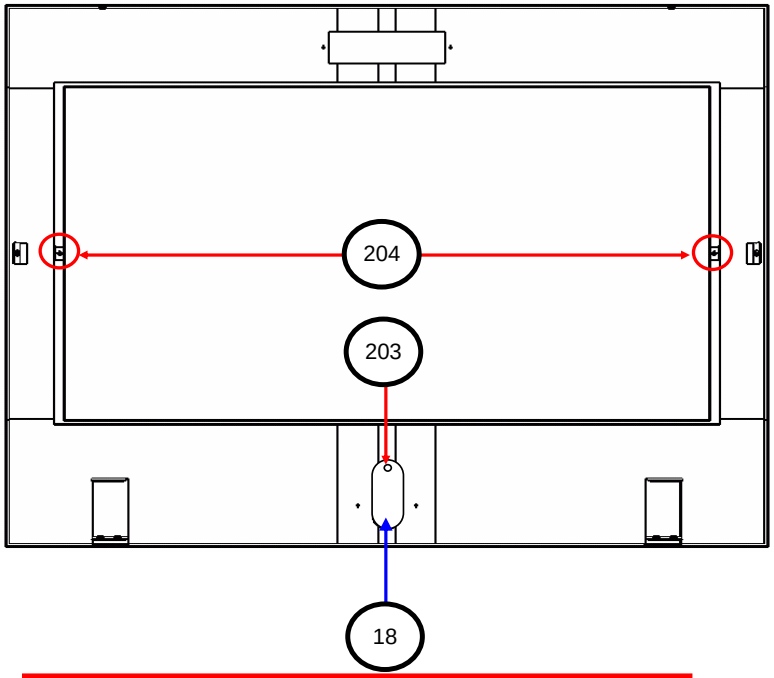

Apply 18 to 3 in position shown and secure using 203.

Tool List			
	PHILLIPS NO2	T20	

Top level No	4FD-0000UK	Level	2
Part number	FD-0530UK		
Description	ASSY MASK FD		
		Page	(2 / 2)

Seq.	Part number.	Description	Qty	Sub Assy	Ord	Tool	S.T
***4	FD-0532UK	SCREEN COVER	1				
***18	FD-0540UK	REMOTE COVER PLATE	1				
***203	008-T00408-0C	M4X8 MSCR TH TMP PRF CRM	1				
***204	000-F00412	M4X12 MSCR CSK PAS	2				

Title: FORD DX

sega work instructions

Name	Richard Ford
Date	08/05/2006
Rev.	1

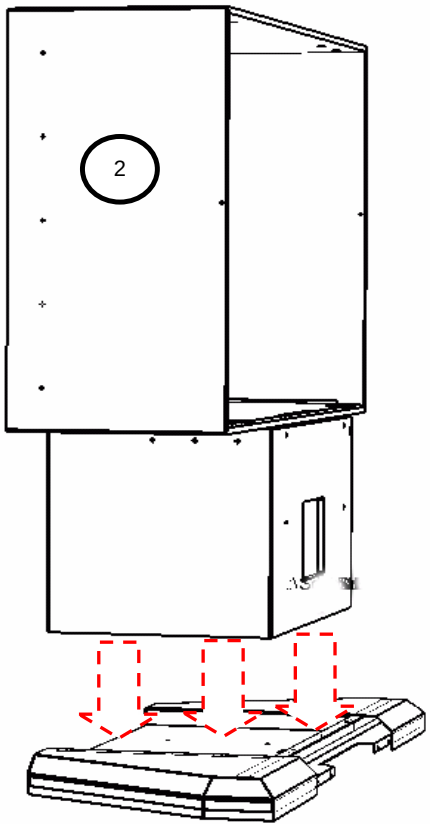

Apply 5 to 3 in position shown and secure using 203.

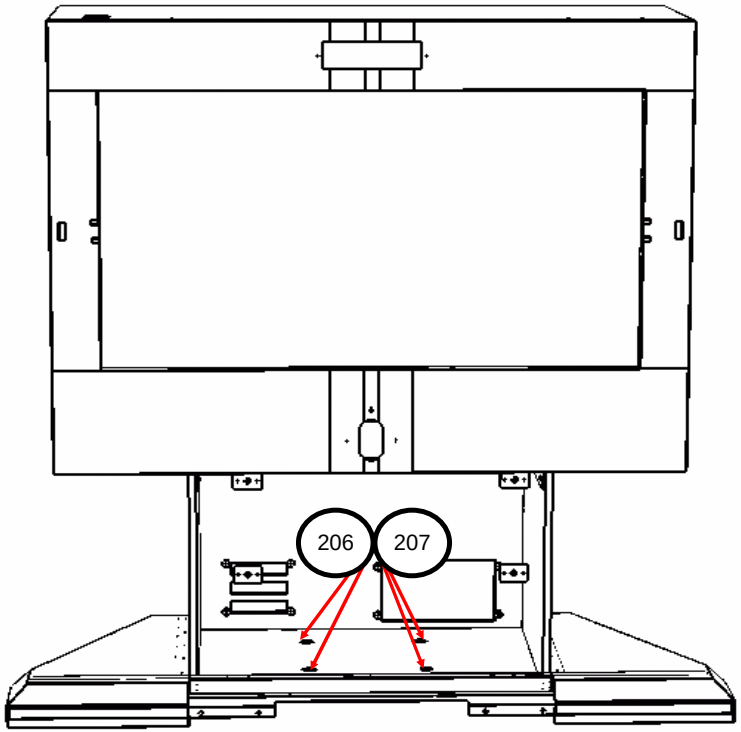

Tool List			
	13MM SOCKET		

Top level No	4FD-0000UK	Level	2
Part number	ORP-3000UK		
Description	ASSY FRAME BASE		
		Page	(1 / 5)

Seq.	Part number.	Description	Qty	Sub Assy	Ord	Tool	S.T
**2	FD-1001UK	MONITOR CABINET FD DX ASSY	1				
**10	FD-0670UK	ASSY SUB FD BASE	1				
**206	030-000830-S	M8X30 BLT SPR PAS	4				
**207	068-852216	M8 WSHR 22OD FLT PAS	4				

Title: FORD DX

sega work instructions

Name	Richard Ford
Date	08/05/2006
Rev.	1

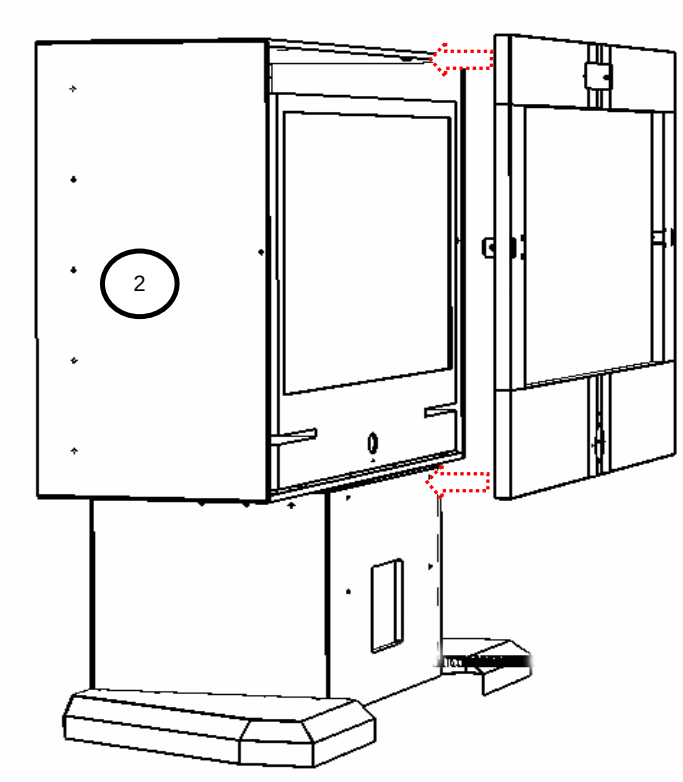

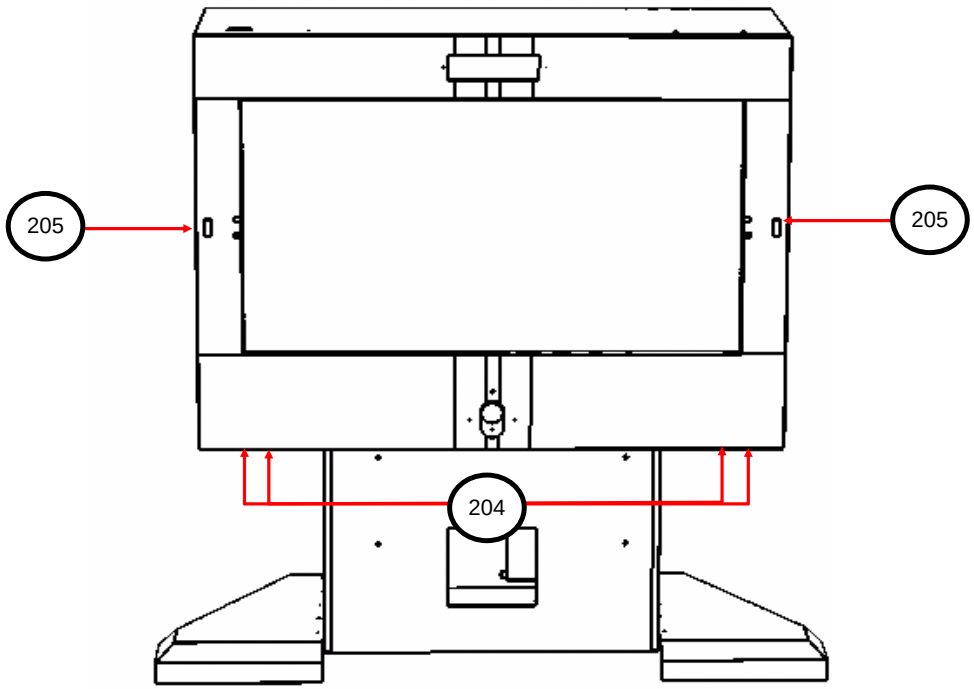

Apply 3 to 2 in position shown and secure using 204 from below and 205 from each side.

Tool List			
	PHILLIPS NO2		

Top level No	4FD-0000UK	Level	2
Part number	ORP-3000UK		
Description	ASSY FRAME BASE		
		Page	(2 / 5)

Seq.	Part number.	Description	Qty	Sub Assy	Ord	Tool	S.T
**2	FD-1001UK	MONITOR CABINET FD DX ASSY	1				
**204	000-T00620-0B	M6X20 MSCR TH BLK	4				
**205	000-T00630-0B	M6X30 MSCR TH BLK	2				

Title: FORD DX

sega work instructions

Name	Richard Ford
Date	08/05/2006
Rev.	1

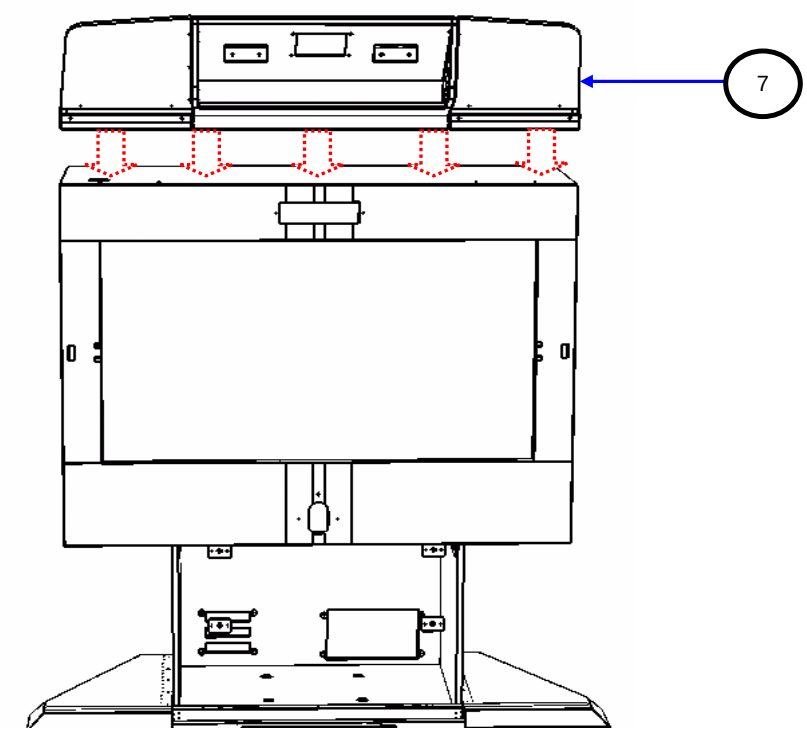

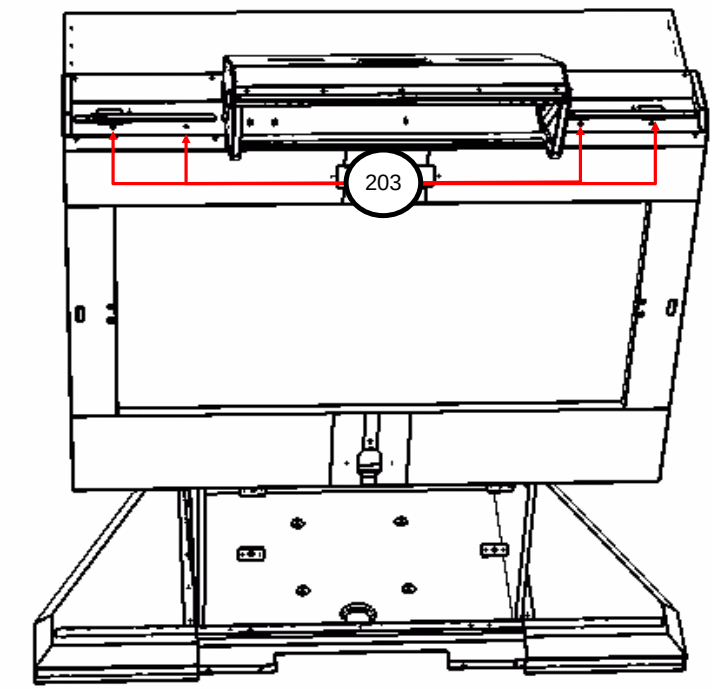

Tool List			
	10MM SOCKET		

Top level No	4FD-0000UK	Level	2
Part number	ORP-3000UK		
Description	ASSY FRAME BASE		
		Page	(3 / 5)

Seq.	Part number.	Description	Qty	Sub Assy	Ord	Tool	S.T
**12	FD-0500UK	ASSY BILLBOARD	1				
**203	030-000620-S	M6X20 BLT W/S PAS	4				

Title: FORD DX

sega work instructions

Name	Richard Ford
Date	08/05/2006
Rev.	1

Apply 11 to 2 in positions shown then fit 101 over the top and secure using 201.

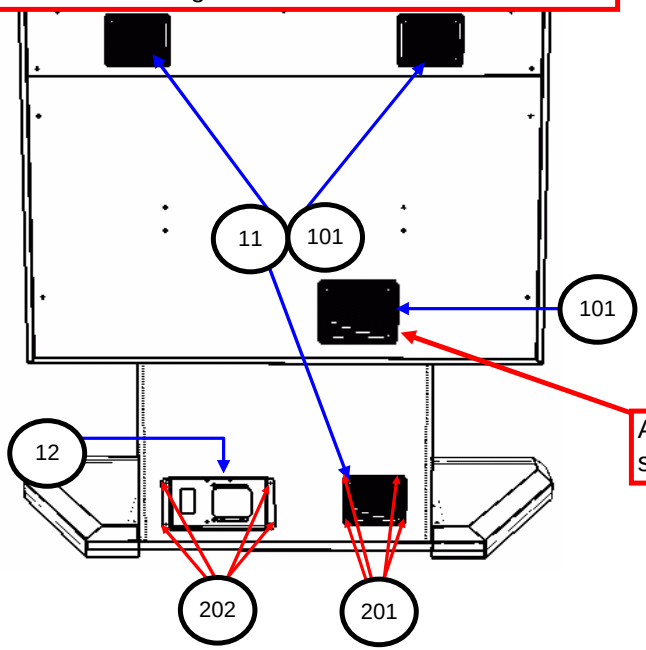

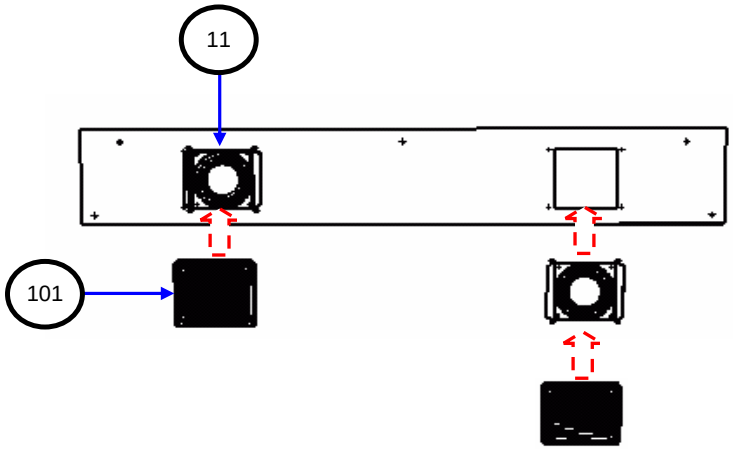

Apply 101 on it's own in position shown securing with 201.

Apply 12 in position shown and secure using 202.

Tool List			
	PHILLIPS NO2		

Top level No	4FD-0000UK	Level	2
Part number	ORP-3000UK		
Description	ASSY FRAME BASE		
		Page	(4 / 5)

Seq.	Part number.	Description	Qty	Sub Assy	Ord	Tool	S.T
**11	FD-1530UK	ASSY FAN DC UK	3				
**12	FD-0660UK	ASSY AC UNIT	1				
**101	253-5460-01	AIR VENT BLACK	4				
**201	000-T00420-0B	M4X20 MSCR TH BLK	16				
**202	000-T00425-0B	M4X25 MSCR TH BLK	4				

Title: FORD DX

sega work instructions

Name	Richard Ford
Date	08/05/2006
Rev.	1

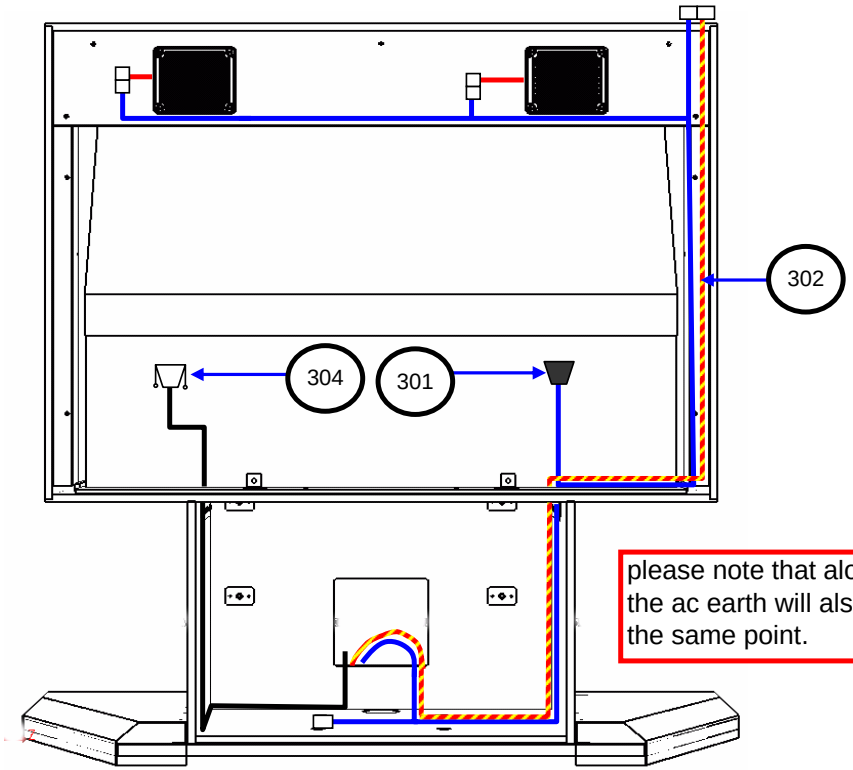

Apply 301,302,303&304 to 1 in locations shown securing 303 with204.

please note that along with 303 the ac earth will also attach to the same point.

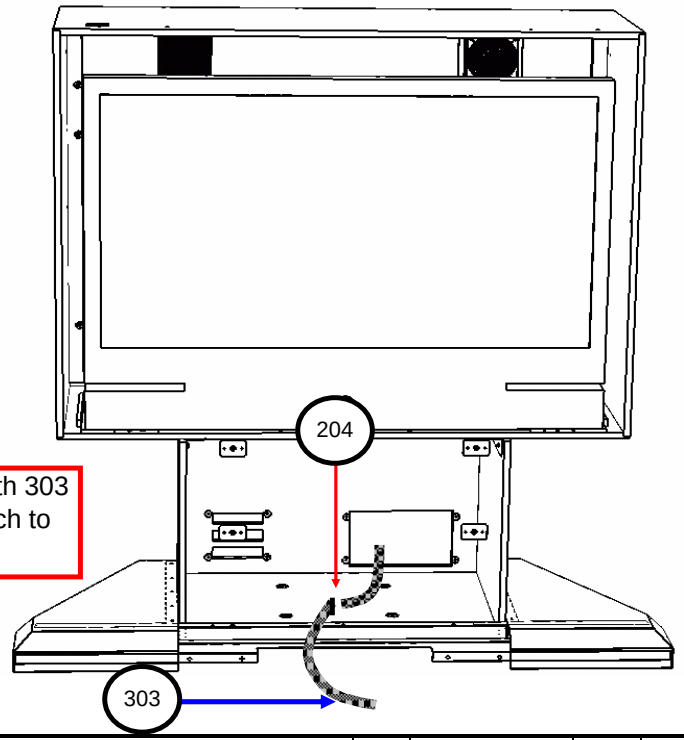

Tool List			
	10MM SOCKET		

Top level No	4FD-0000UK	Level	2
Part number	ORP-3000UK		
Description	ASSY FRAME BASE		
		Page	(5 / 5)

Seq.	Part number.	Description	Qty	Sub Assy	Ord	Tool	S.T
***204	050-F00600	M6 FLG NUT SER PAS	1				
***301	FD-66033UK	WH AC BRKT EXT	1				
***302	FD-66038UK	WH LED FAN EXT	1				
***303	FD-66042UK	WH EARTH BRAID STRAP	1				
***304	600-7009-1800UK	CA VGA M/M 1800MM	1				

Title: FORD DX

sega work instructions

Name	Richard Ford
Date	08/05/2006
Rev.	1

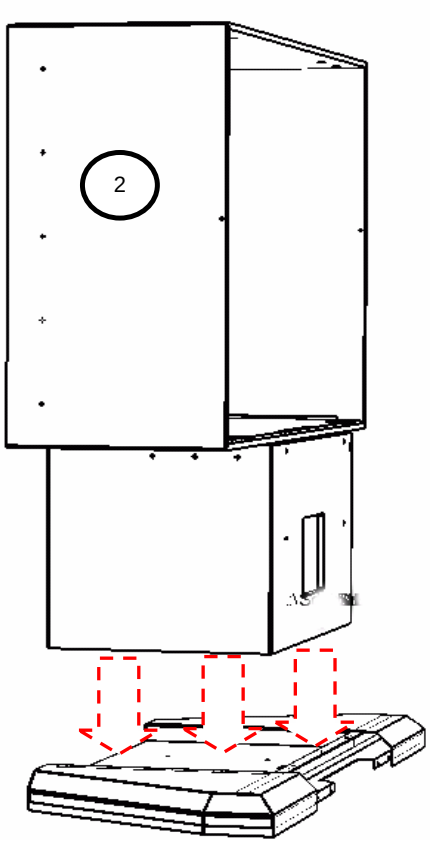

Apply 5 to 3 in position shown and secure using 203.

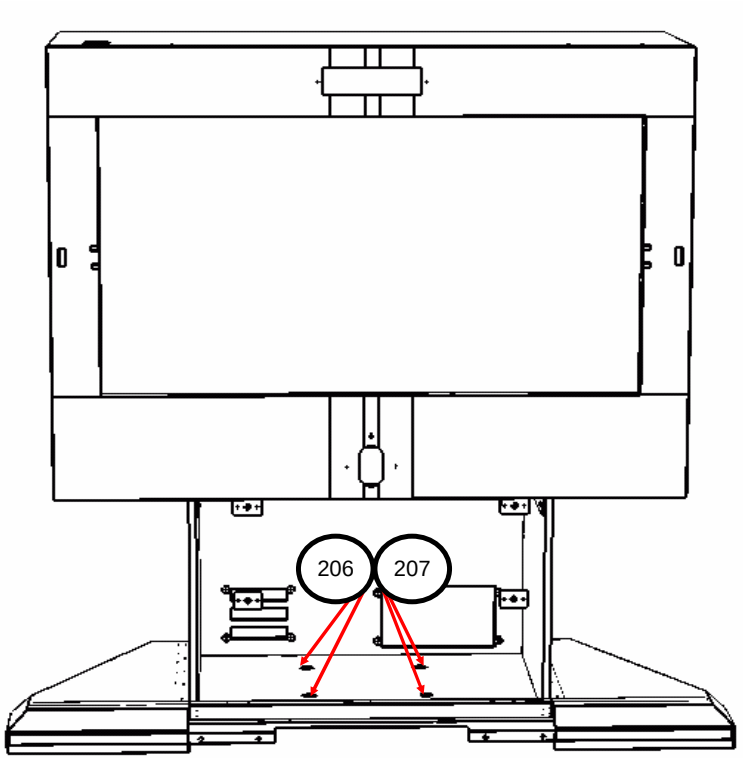

Tool List			
	13MM SOCKET		

Top level No	4FD-0000UK	Level	2
Part number	ORP-3000UK		
Description	ASSY FRAME BASE		
		Page	(1 / 4)

Seq.	Part number.	Description	Qty	Sub Assy	Ord	Tool	S.T
**2	FD-1001UK	MONITOR CABINET FD DX ASSY	1				
**10	FD-0670UK	ASSY SUB FD BASE	1				
**206	030-000830-S	M8X30 BLT SPR PAS	4				
**207	068-852216	M8 WSHR 22OD FLT PAS	4				

Title: FORD DX

sega work instructions

Name	Richard Ford
Date	08/05/2006
Rev.	1

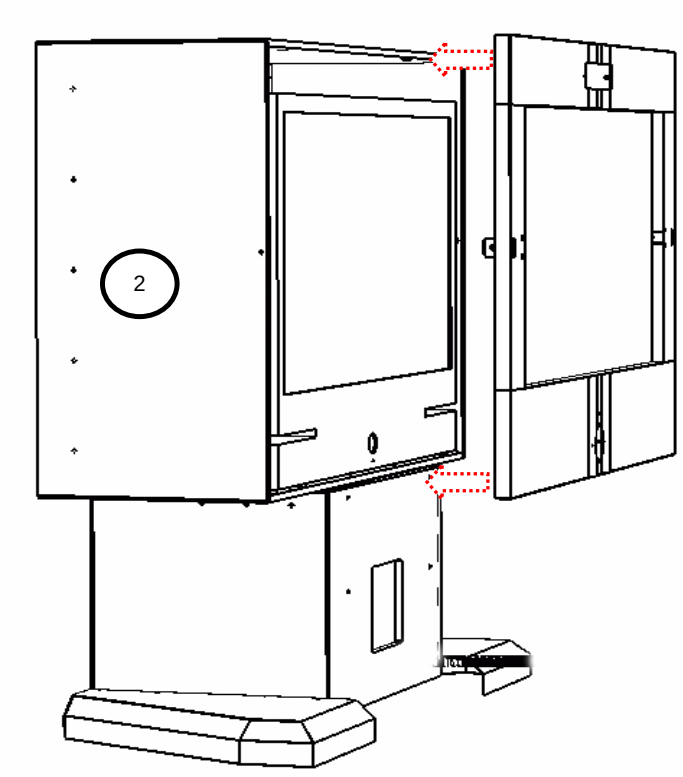

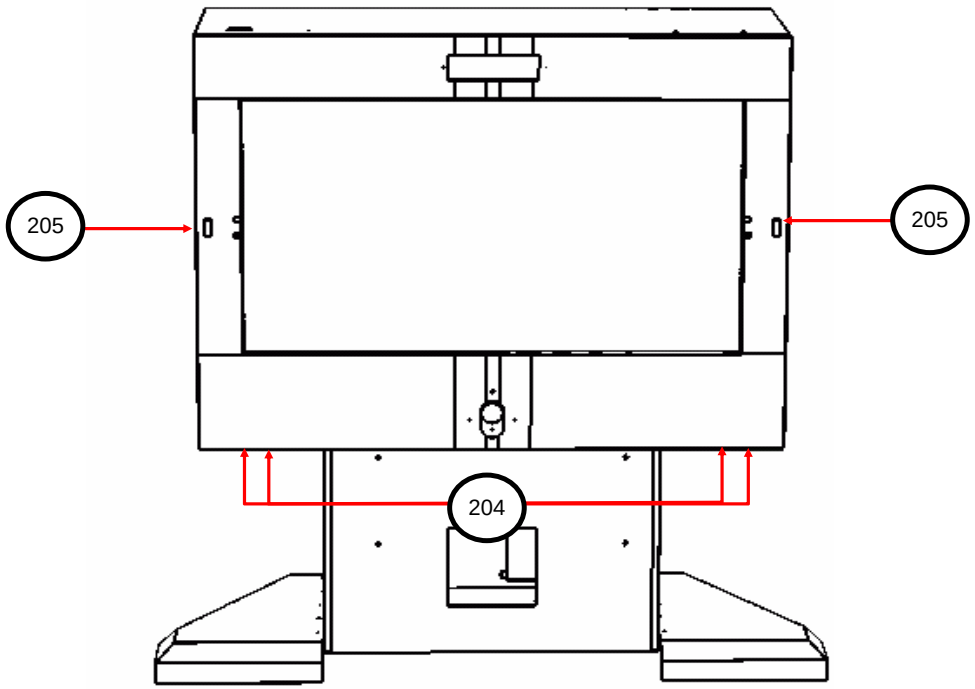

Apply 3 to 2 in position shown and secure using 204 from below and 205 from each side.

Tool List			
	PHILLIPS NO2		

Top level No	4FD-0000UK	Level	2
Part number	ORP-3000UK		
Description	ASSY FRAME BASE		
		Page	(2 / 4)

Seq.	Part number.	Description	Qty	Sub Assy	Ord	Tool	S.T
**2	FD-1001UK	MONITOR CABINET FD DX ASSY	1				
**204	000-T00620-0B	M6X20 MSCR TH BLK	4				
**205	000-T00630-0B	M6X30 MSCR TH BLK	2				

Title: FORD DX

sega work instructions

Name	Richard Ford
Date	08/05/2006
Rev.	1

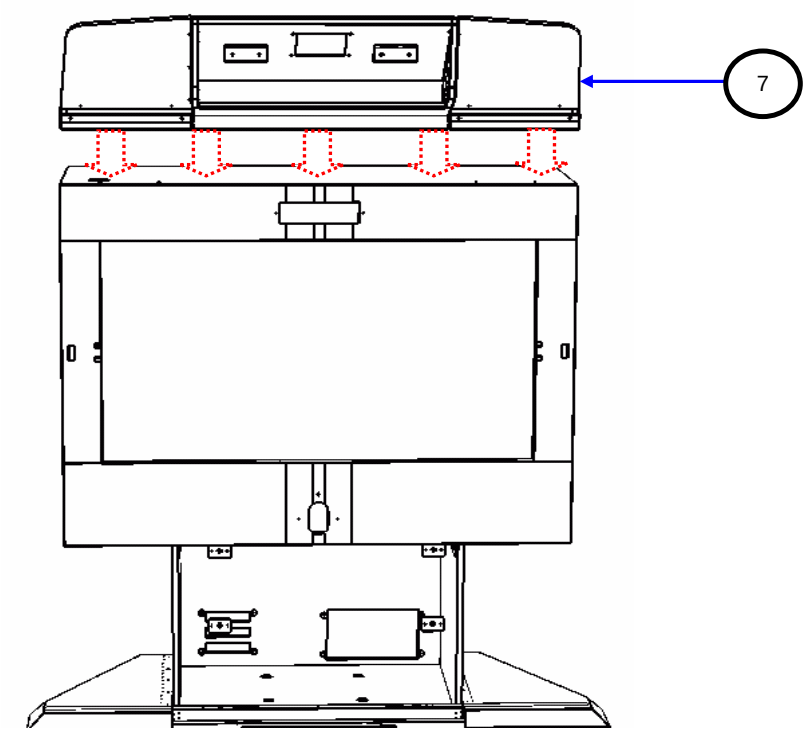

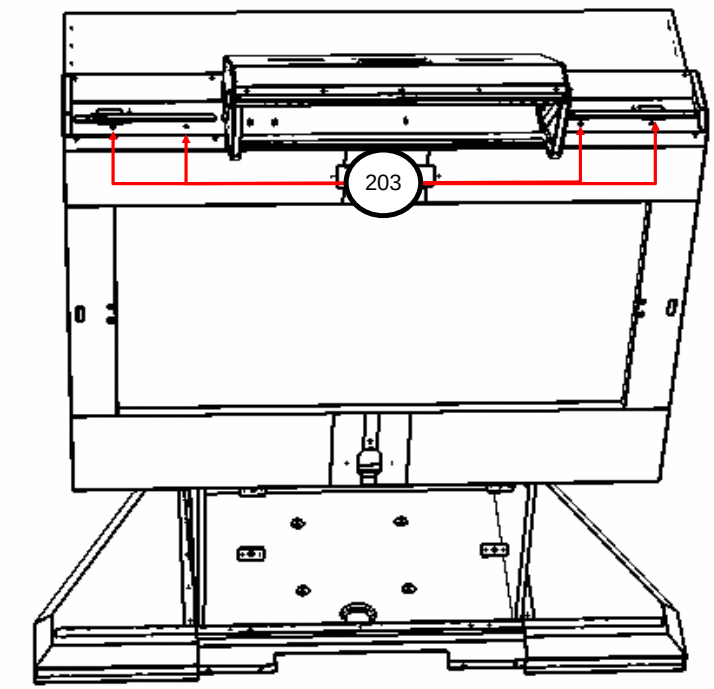

Tool List			
	10MM SOCKET		

Top level No	4FD-0000UK	Level	2
Part number	ORP-3000UK		
Description	ASSY FRAME BASE		
		Page	(3 / 4)

Seq.	Part number.	Description	Qty	Sub Assy	Ord	Tool	S.T
**12	FD-0500UK	ASSY BILLBOARD	1				
**203	030-000620-S	M6X20 BLT W/S PAS	4				

Title: FORD DX

sega work instructions

Name	Richard Ford
Date	08/05/2006
Rev.	1

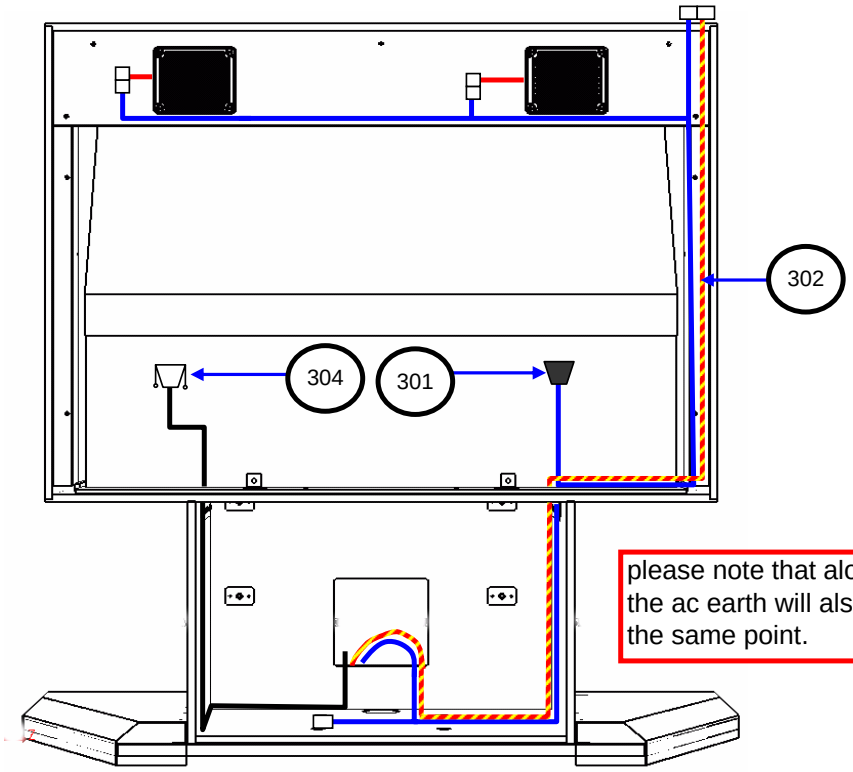

Apply 301,302,303&304 to 1 in locations shown securing 303 with204.

please note that along with 303 the ac earth will also attach to the same point.

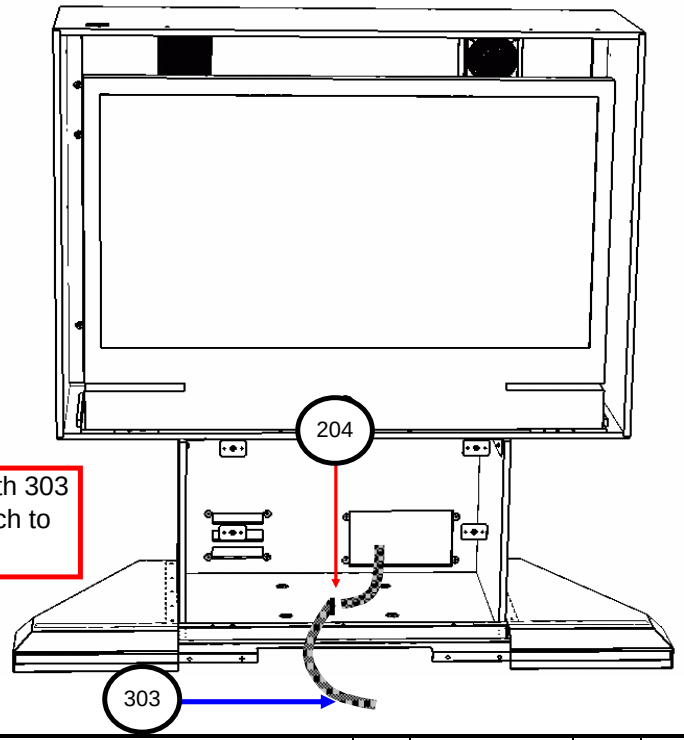

Tool List			
	10MM SOCKET		

Top level No	4FD-0000UK	Level	2
Part number	ORP-3000UK		
Description	ASSY FRAME BASE		
		Page	(4 / 4)

Seq.	Part number.	Description	Qty	Sub Assy	Ord	Tool	S.T
***204	050-F00600	M6 FLG NUT SER PAS	1				
***301	FD-66033UK	WH AC BRKT EXT	1				
***302	FD-66038UK	WH LED FAN EXT	1				
***303	FD-66042UK	WH EARTH BRAID STRAP	1				
***304	600-7009-1800UK	CA VGA M/M 1800MM	1				

Title: FORD DX

sega work instructions

Name	Richard Ford
Date	08/05/2006
Rev.	1

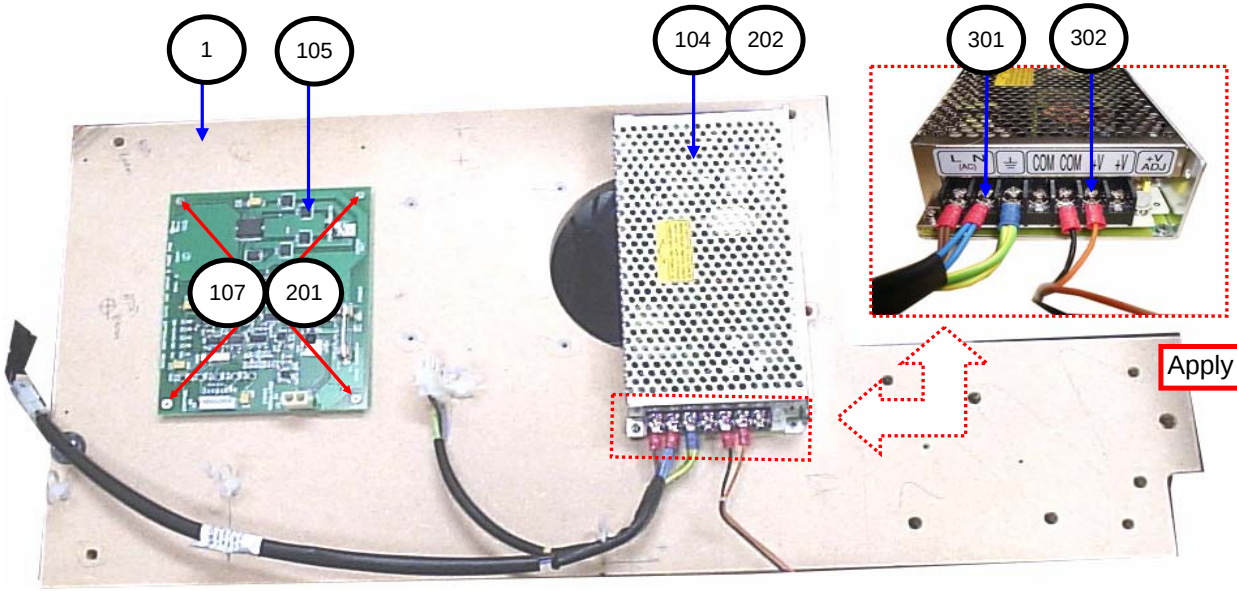

Apply 301&302 to 104 in locations shown.

Apply 107 to 105 then secure 105 to 1 in position shown and secure using 201.

Apply 104 to 1 in position shown and secure using 202 from the underneath of the board.

Tool List			
	PHILIPS NO1		

Top level No	4FD-0000UK	Level	2
Part number	FD-4200UK		
Description	ASSY ELEC BOARD		
		Page	(1 / 2)

Seq.	Part number.	Description	Qty	Sub Assy	Ord	Tool	S.T
***1	FD-4201UK	WOODEN BASE ELEC	1				
***104	400-0024-0100UK	POWER SUPPLY 24V 100 W	1				
***105	FR-838-001UK	MOTOR CONT ISO HAPP 50-2000-03	1				
***107	OS1011	PCB FEET	4				
***201	012-P03512-F	N6X1/2" S/TAP FLG PAS	4				
***202	000-F00320	M3X20 MSCR CSK PAS	2				
***301	FD-66016UK	WH AC POWER D	1				
***302	FD-66017UK	WH MOTOR IN	1				

Title: FORD DX

sega work instructions

Name	Richard Ford
Date	08/05/2006
Rev.	1

Apply 303&304 to locations shown and feed through 108 as shown.

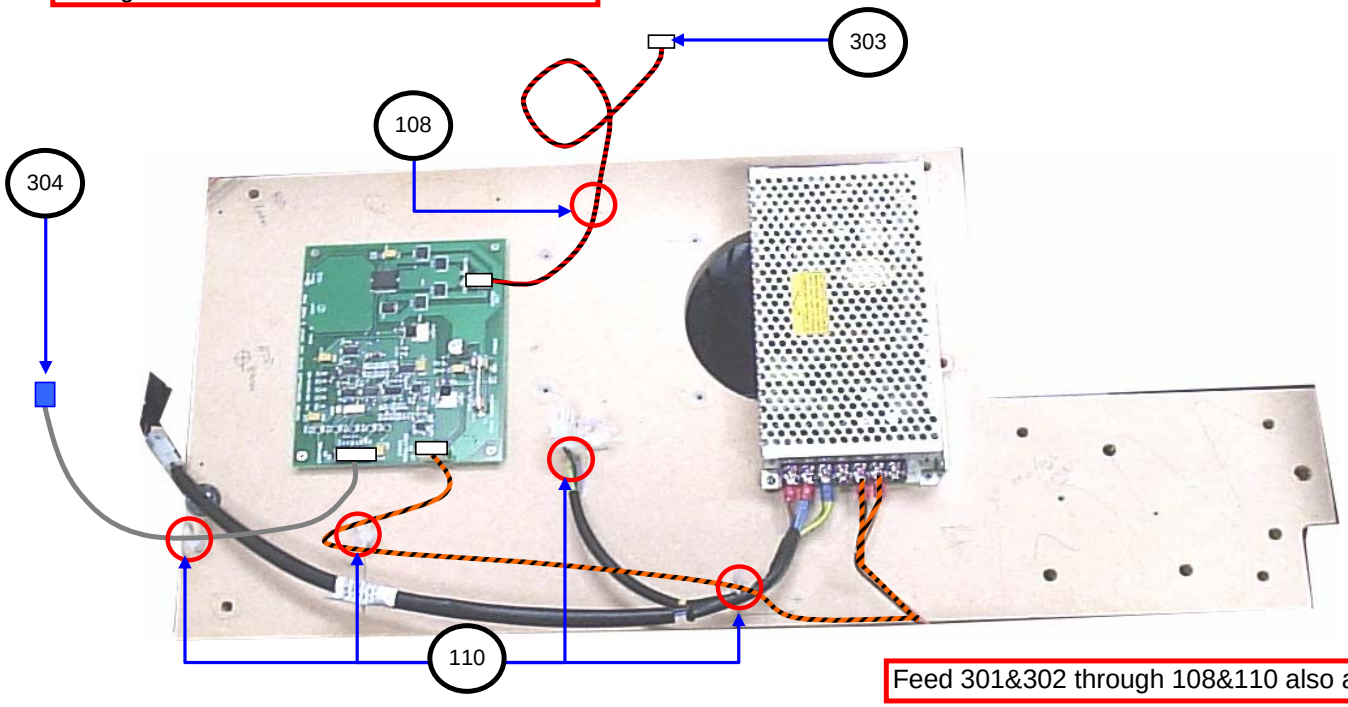

Feed 301&302 through 108&110 also as shown.

Tool List			

Top level No	4FD-0000UK	Level	2
Part number	FD-4200UK		
Description	ASSY ELEC BOARD		
		Page	(2 / 2)

Seq.	Part number.	Description	Qty	Sub Assy	Ord	Tool	S.T
***108	280-A00964-WX	ROUTER TWISTD09 SO.6.4WOOD X BH	1				
***110	280-A02064-WX	ROUTER TWIST BHKL-750-4-01	4				
***303	FD-66018UK	WH MOTOR OUT	1				
***304	FD-66019UK	WH PARALLEL PORT C	1				

Title: FORD DX

sega work instructions

Name	Richard Ford
Date	08/05/2006
Rev.	1

Apply 101&105 to 1 in positions shown and secure using 202 from the underneath.

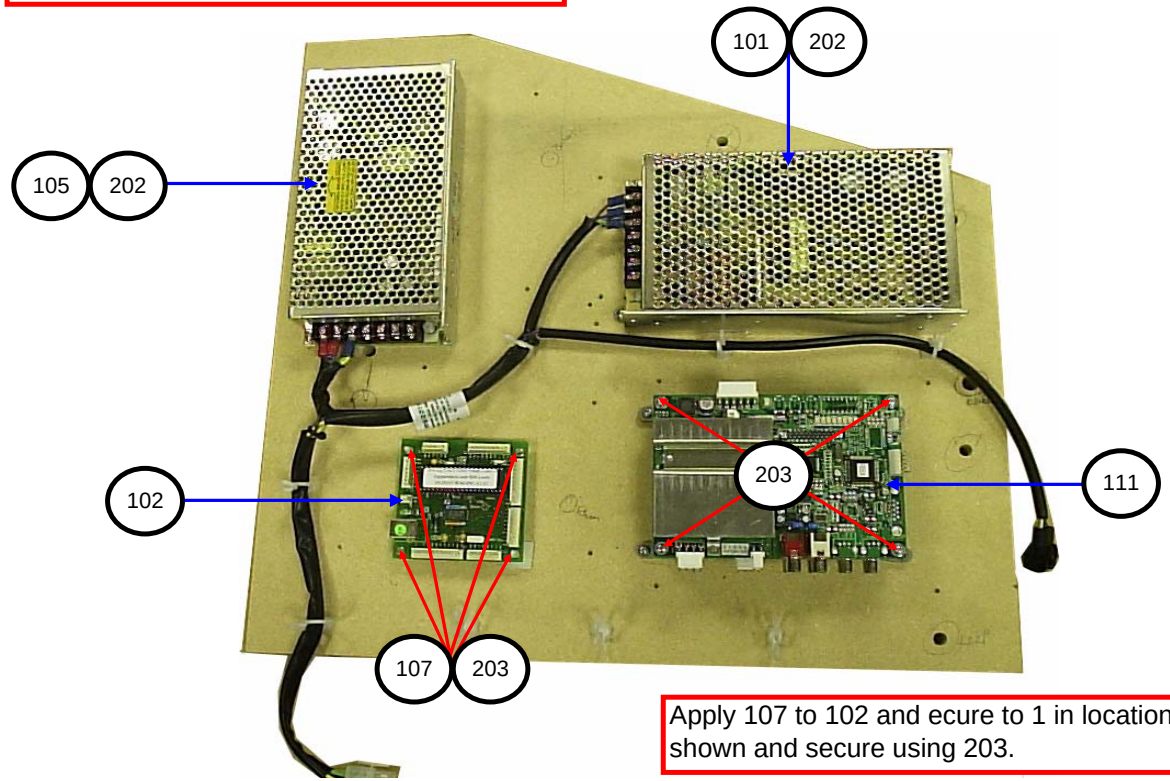

Apply 111 to 1 in position shown securing with 203.

Apply 107 to 102 and ecure to 1 in location shown and secure using 203.

Tool List			
	PHILLIPS NO1		

Top level No	4FD-0000UK	Level	2
Part number	FD-4100UK		
Description	ASSY AMP BOARD		
		Page	(1 / 5)

Seq.	Part number.	Description	Qty	Sub Assy	Ord	Tool	S.T
***101	400-0150-0024	PSU 24VDC 150W S-150-24	1				
***102	FR-838-002UK	UGCI CONTROL BOARD	1				
***105	400-0130-0512	PSU 5/12VDC 130W 80-0210-00	1				
***107	OS1011	PCB FEET	4				
***111	838-14515-A04	AMP 4CH + WOOFER	1				
***202	000-F00320	M3X20 MSCR CSK PAS	4				
***203	012-P035120F	N6X1/2" S/TAP FLG PAS	8				

Title: FORD DX

sega work instructions

Name	Richard Ford
Date	08/05/2006
Rev.	1

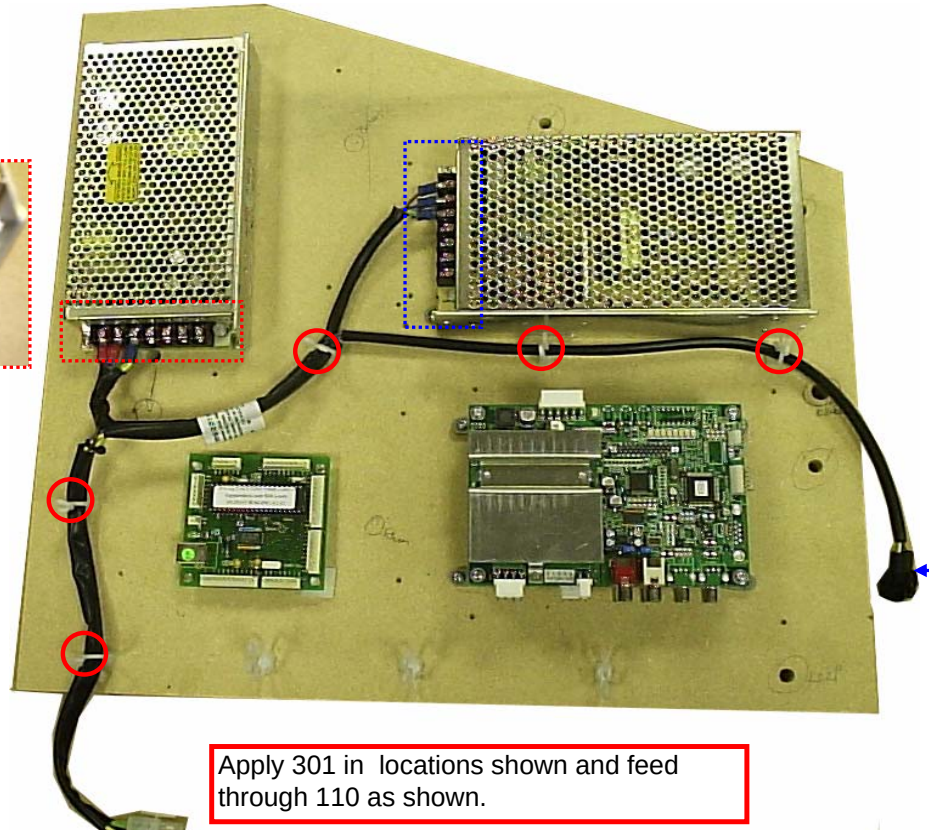

Apply 301 in locations shown and feed through 110 as shown.

Tool List			
	PHILLIPS NO2		

Top level No	4FD-0000UK	Level	2
Part number	FD-4100UK		
Description	ASSY AMP BOARD		
		Page	(2 / 5)

Seq.	Part number.	Description	Qty	Sub Assy	Ord	Tool	S.T
***110	280-A02064-WX	ROUTER TWIST BHKL-750-4-01	5				
***301	FD-66015UK	WH AC POWER C	1				

Title: FORD DX

sega work instructions

Name	Richard Ford
Date	08/05/2006
Rev.	1

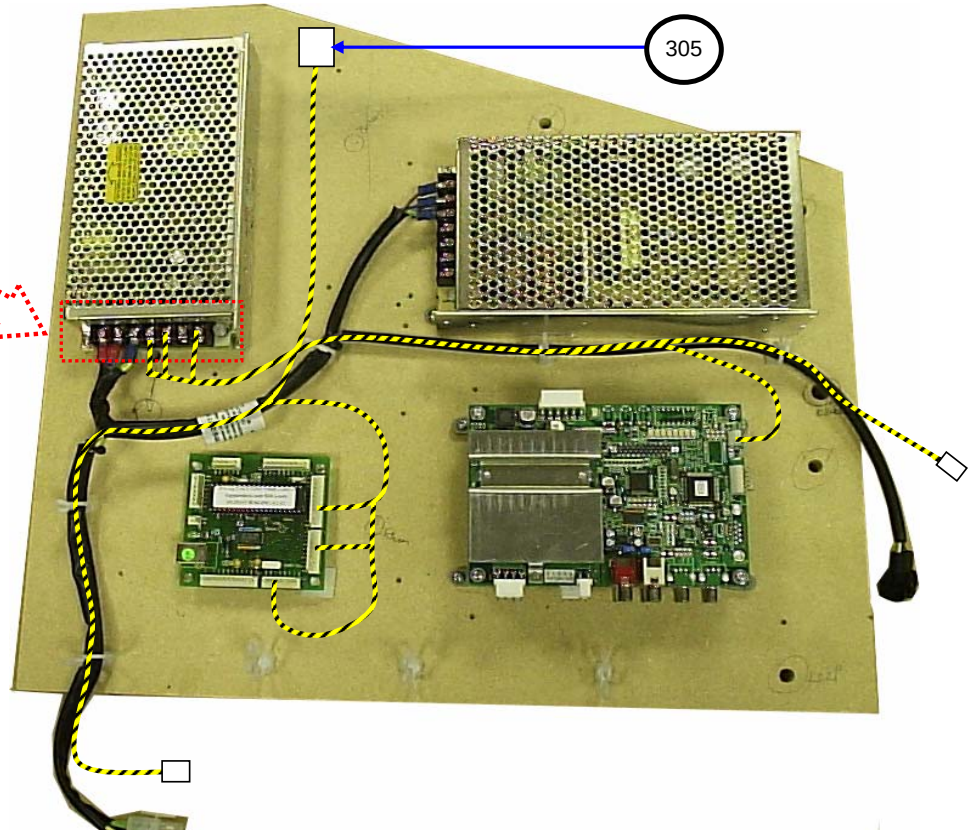

Apply 305 to locations shown noting the positions of the black ansd yellow above.

Tool List			
	PHILLIPS NO2		

Top level No	4FD-0000UK	Level	2
Part number	FD-4100UK		
Description	ASSY AMP BOARD		
		Page	(3 / 5)

Seq.	Part number.	Description	Qty	Sub Assy	Ord	Tool	S.T
***305	FD-66025UK	WH I/O A	1				

Title: FORD DX

sega work instructions

Name	Richard Ford
Date	08/05/2006
Rev.	1

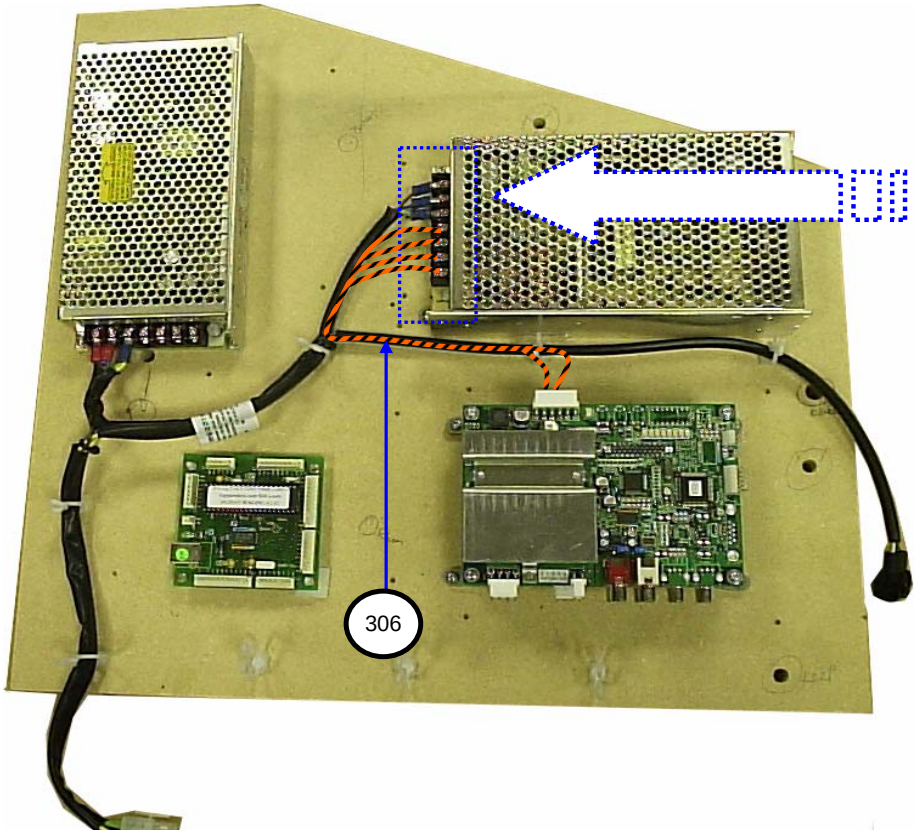

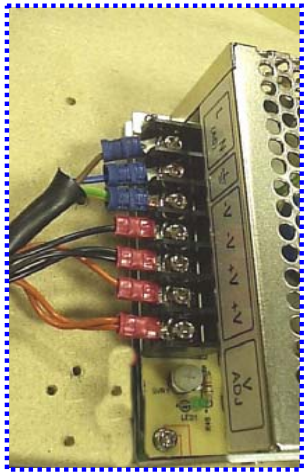

Apply 306 to locations shown noting the positions of the black and orange above.

Tool List			
	PHILLIPS NO2		

Top level No	4FD-0000UK	Level	2
Part number	FD-4100UK		
Description	ASSY AMP BOARD		
		Page	(4 / 5)

Seq.	Part number.	Description	Qty	Sub Assy	Ord	Tool	S.T
***306	FD-66020UK	WH 24 POWER	1				

Title: FORD DX

sega work instructions

Name	Richard Ford
Date	08/05/2006
Rev.	1

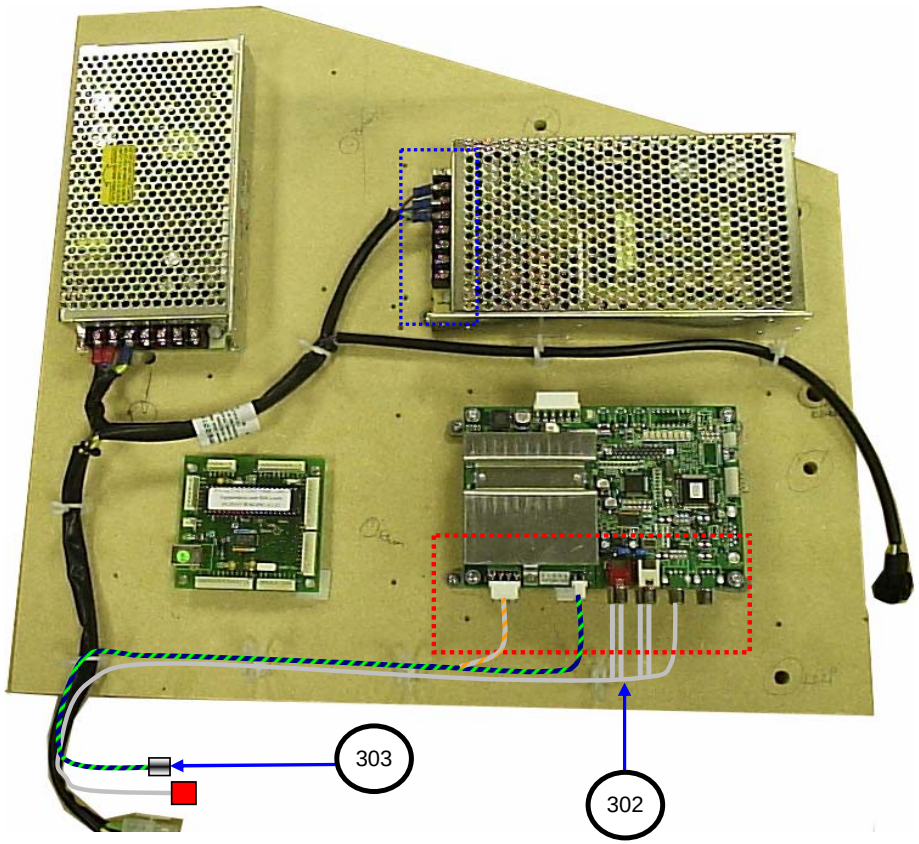

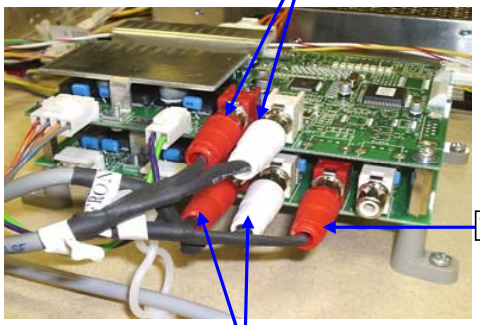

Apply 302 to locations shown noting the positions above.

Apply 303 to location shown.

Tool List			

Top level No	4FD-0000UK	Level	2
Part number	FD-4100UK		
Description	ASSY AMP BOARD		
		Page	(5 / 5)

Seq.	Part number.	Description	Qty	Sub Assy	Ord	Tool	S.T
***302	FD-66006UK	WH AUDIO C	1				
***303	FD-66022UK	WH SPRK REAR C	1				

Title: FORD DX

sega work instructions

Name	Richard Ford
Date	08/05/2006
Rev.	1

Apply 3 below 2 and 1 from above then secure using 201&203.

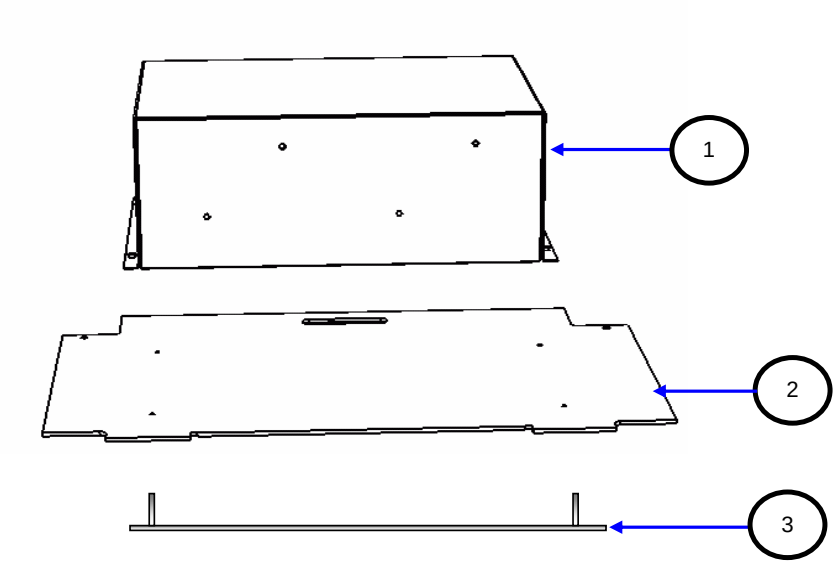

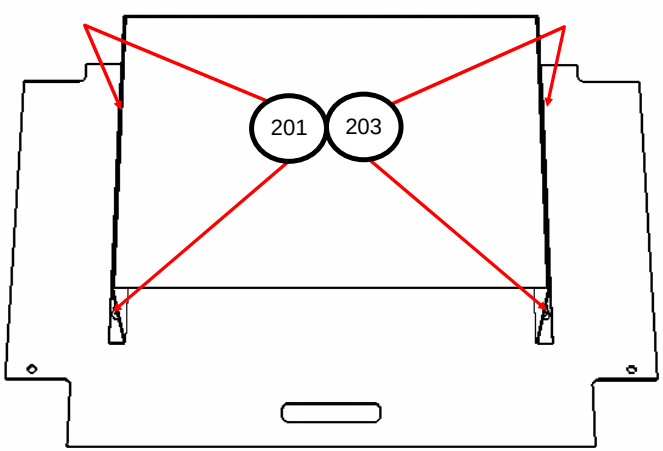

Tool List			
	7MM SOCKET		

Top level No	4FD-0000UK	Level	2
Part number	ORP-3000UK		
Description	ASSY FRAME BASE		
		Page	(1 / 2)

Seq.	Part number.	Description	Qty	Sub Assy	Ord	Tool	S.T
*****1	FD-4001UK	MAIN BD BASE	1				
*****2	FD-4002UK	STUD BRKT MAIN BD	1				
*****3	610-0001-01UK	ASSY CASE PC (CP 2-SEGA-PCSYS)	1				
*****201	050-F00400	M4 NUT FLG SER PAS	4				
*****203	068-441616	M4 WSHR 16OD FLT PAS	4				

Title: FORD DX

sega work instructions

Name	Richard Ford
Date	08/05/2006
Rev.	1

Apply 308,309,310 &311 to positions shown.

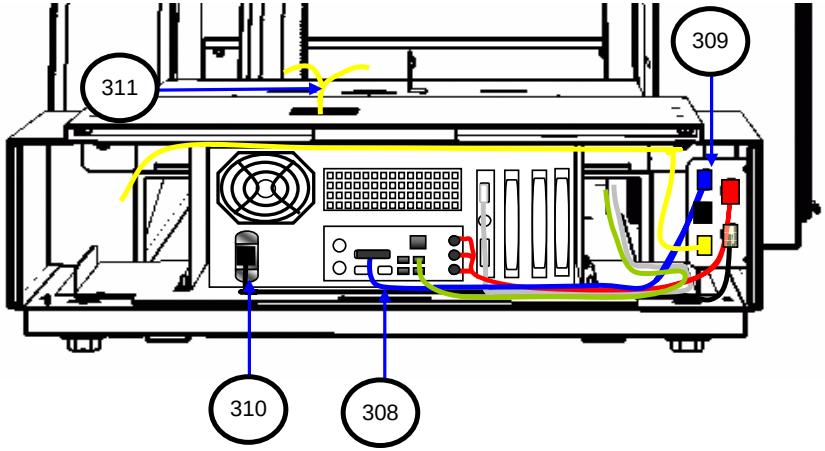

Tool List			

Seq.	Part number.	Description	Qty	Sub Assy	Ord	Tool	S.T
*****308	FD-66005UK	WH AUDIO A	1				
*****309	FD-66007UK	WH PARALLEL PORT A	1				
*****310	FD-66010UK	WH PC POWER A	1				
*****311	FD-66011UK	WH BRAKE LIGHT PWR A	1				

Top level No	4FD-0000UK	Level	2
Part number	ORP-3000UK		
Description	ASSY FRAME BASE		
		Page	(2 / 2)

Title: FORD DX

sega work instructions

Name	Richard Ford
Date	08/05/2006
Rev.	1

Unsecure the clasps on 8 as shown.

Apply 8 over 4 in position shown and secure.

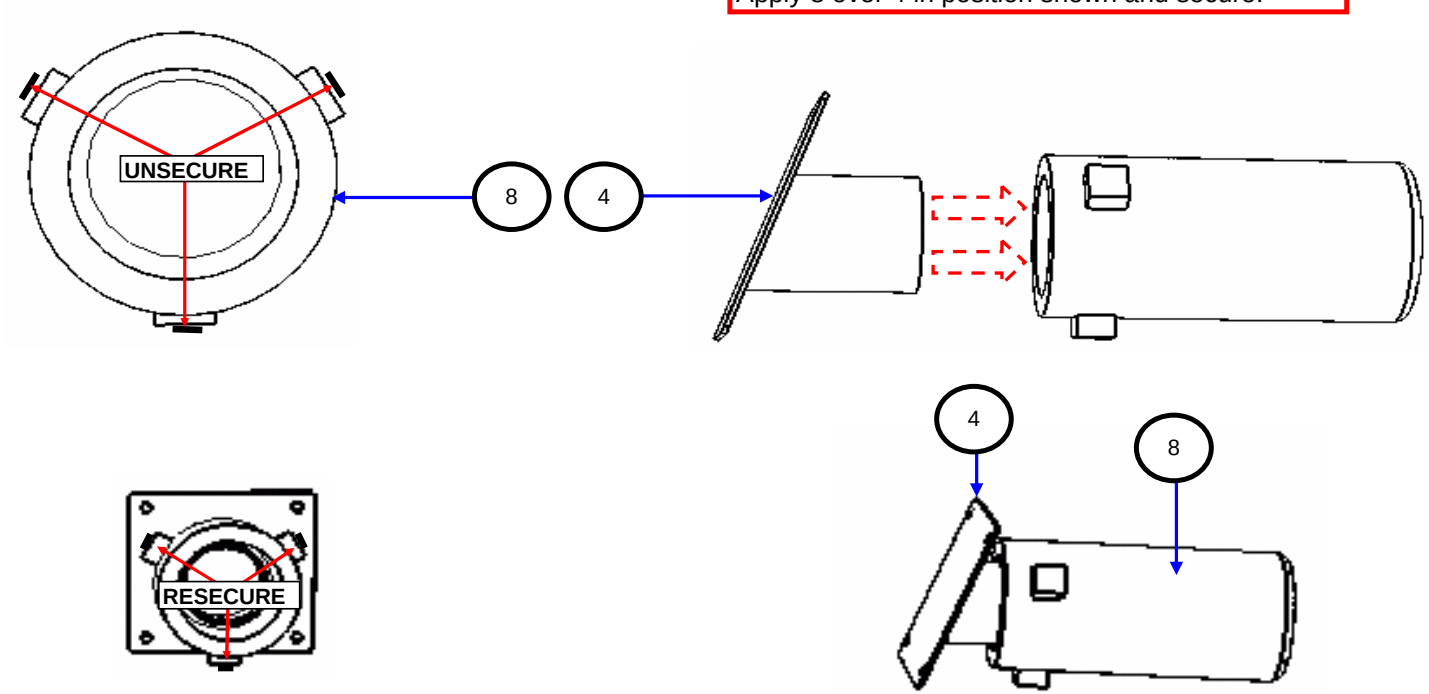

Tool List			
	10MM SOCKET		

Top level No	4FD-0000UK	Level	2
Part number	ORP-3000UK		
Description	ASSY FRAME BASE		
		Page	(1 / 6)

Seq.	Part number.	Description	Qty	Sub Assy	Ord	Tool	S.T
***4	FD-2355UK	BRKT MTG TAILPIPE	2				
***8	ORP-2364UK	TAILPIPE EXHAUST	2				

Title: FORD DX

sega work instructions

Name	Richard Ford
Date	08/05/2006
Rev.	1

Apply 4 to 1 in positions shown and secure using 212&214.

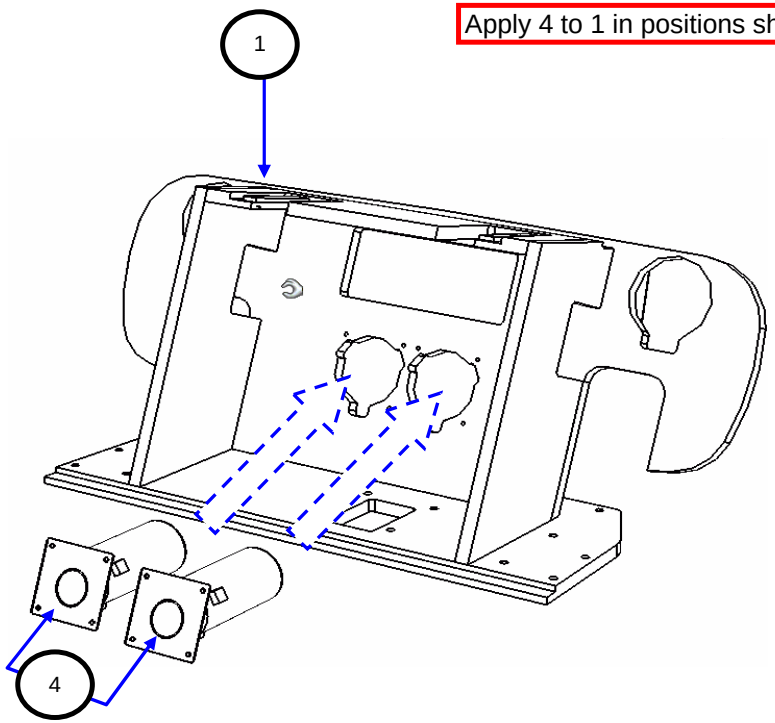

PLEASE NOTE THAT I HAVE REMOVED THE BACK ILLUSTRATION PURPOSES

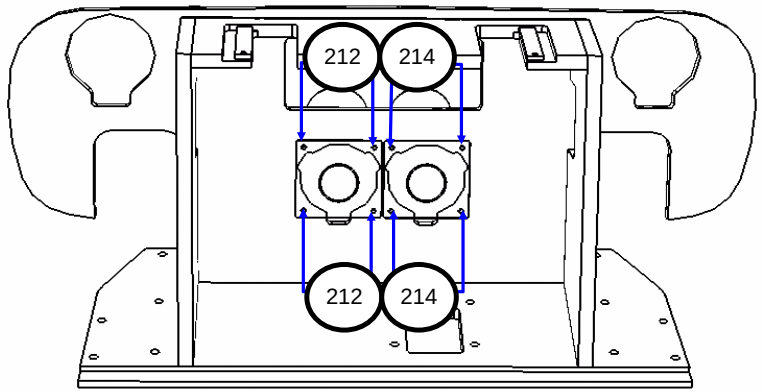

Tool List			
	10MM SOCKET		

Top level No	4FD-0000UK	Level	2
Part number	ORP-3000UK		
Description	ASSY FRAME BASE		
		Page	(2 / 6)

Seq.	Part number.	Description	Qty	Sub Assy	Ord	Tool	S.T
***1	FD-2351UK	ASSY CABI REAR	1				
***212	030-000620-S	M6X20 BLT W/S PAS	8				
***214	060-F00600	M6 WSHR FORM A FLT PAS	8				

Title: FORD DX

sega work instructions

Name	Richard Ford
Date	08/05/2006
Rev.	1

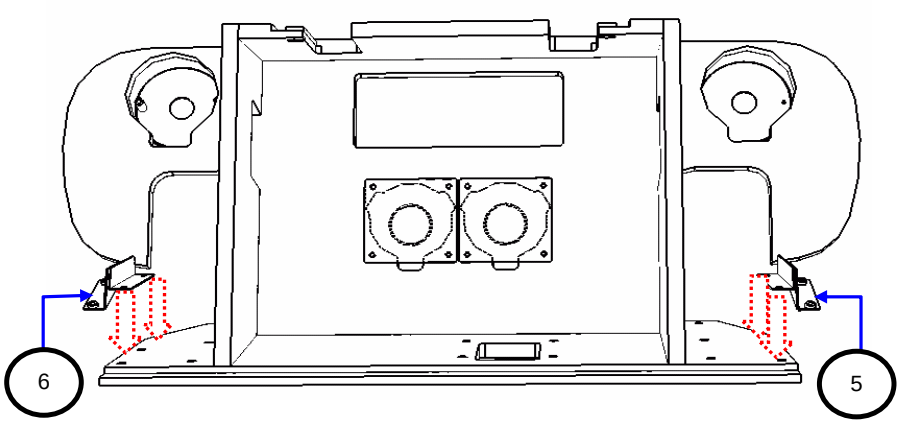

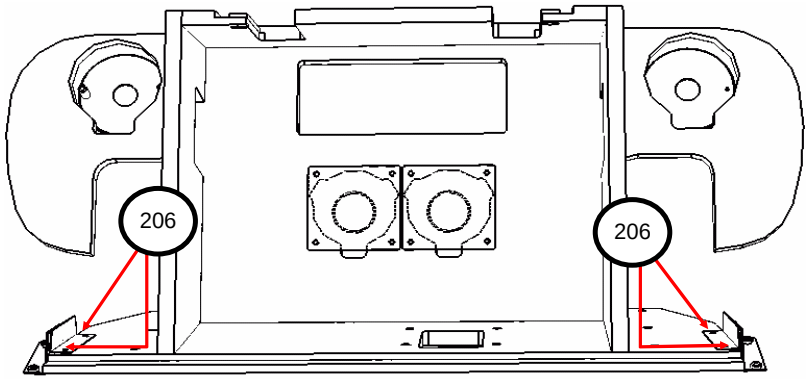

Apply 5&6 to 1 in positions shown securing using 206 as shown.

Apply 7 to 1 in position shown and secure using 212.

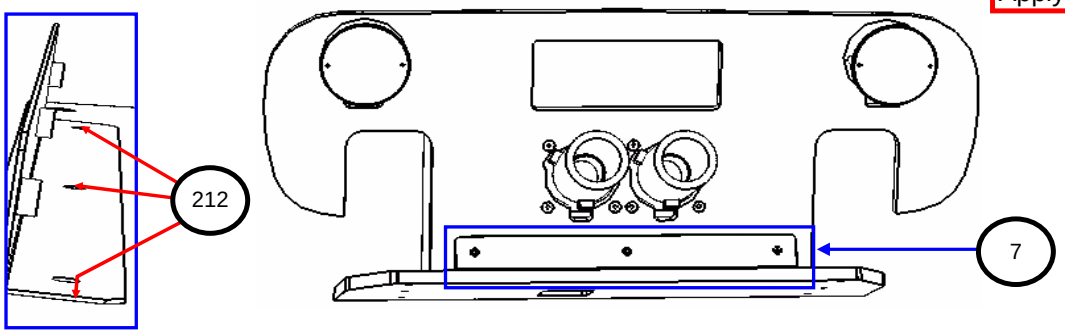

PLEASE NOTE THAT I HAVE REMOVED THE BACK ILLUSTRATION PURPOSES

Tool List			
	PHILLIPS NO2	7MM SOCKET	10MM SOCKET

Top level No	4FD-0000UK	Level	2
Part number	ORP-3000UK		
Description	ASSY FRAME BASE		
		Page	(3 / 6)

Seq.	Part number.	Description	Qty	Sub Assy	Ord	Tool	S.T
***5	FD-2356UK	BRKT LOWER MOUNT R	1				
***6	FD-2357UK	BRKT LOWER MOUNT L	1				
***7	FD-2358UK	BRKT LOWER BACK	1				
***206	000-P00612-W	M6X12 MSCR PAN W/FS PAS	4				
***212	030-000620-S	M6X20 BLT SPR PAS	3				

Title: FORD DX

sega work instructions

Name	Richard Ford
Date	08/05/2006
Rev.	1

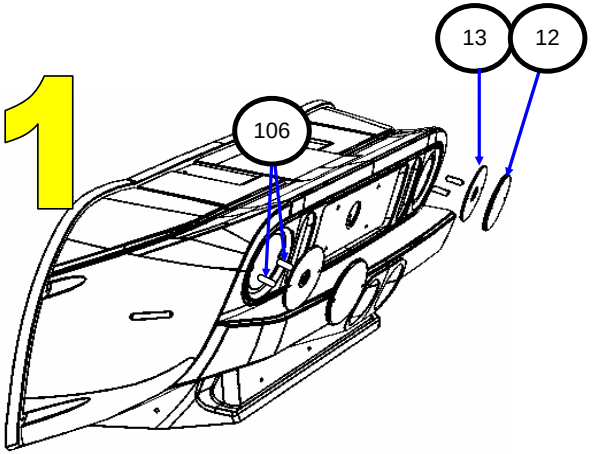

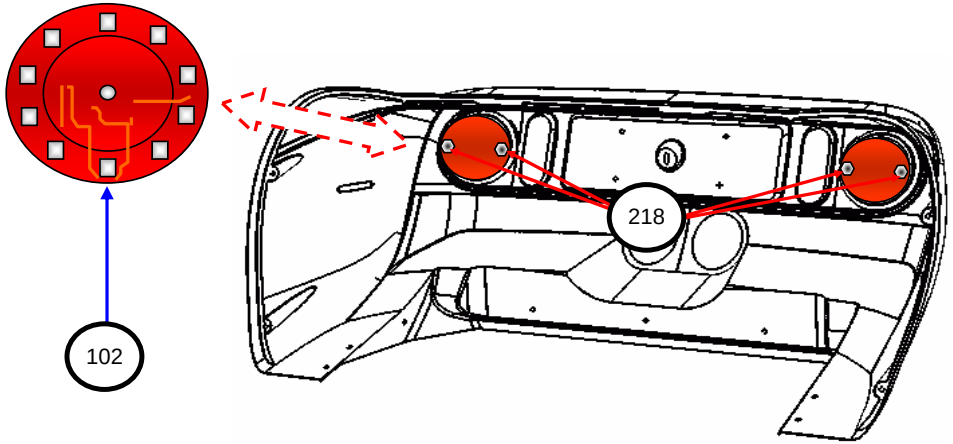

Apply 12&13 to the front of 2 then106 on the inside to space of 102 when apllied the secure from by applying 205 form the outside and 218 from the inside as shown.

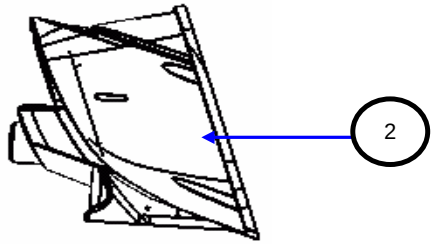

PLEASE NOTE THAT I HAVE SHOWN 106 IN DIAGRAM 1 FOR POSITIONING.

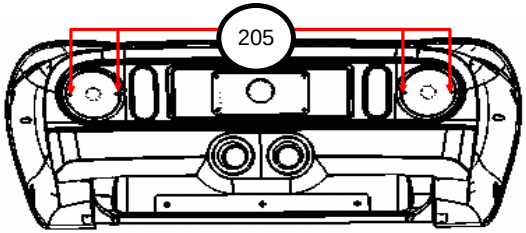

Tool List			
	PHILLIPS NO2		

Top level No	4FD-0000UK	Level	2
Part number	ORP-3000UK		
Description	ASSY FRAME BASE		
		Page	(4 / 6)

Seq.	Part number.	Description	Qty	Sub Assy	Ord	Tool	S.T
***5	FD-2356UK	BRKT LOWER MOUNT R	1				
***12	FD-2365-AUK	REAR LIGHT TOP	2				
***13	FD-2365-BUK	REAR LIGHT BASE	2				
***102	FD-838-004UK	BRAKE LIGHT LED BRD	1				
***106		SPACER	4				
***205	000-P00445-W	M4X45 MSCR W/S APN PAS	4				
***218	050-U00400	M4 NUT NYLOK PAS	4				
***302	FD-60039UK	WH LED BRAKE LIGHT	1				

Title: FORD DX

sega work instructions

Name	Richard Ford
Date	08/05/2006
Rev.	1

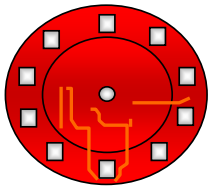

Apply 302 to 102 in positions shown.

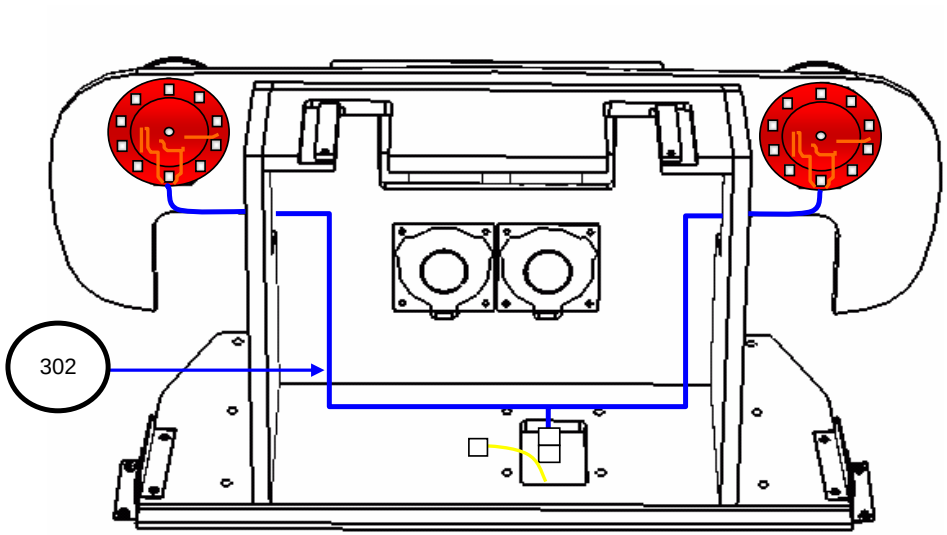

Tool List			
	T30	PHILLIPS NO2	

Top level No	4FD-0000UK	Level	2
Part number	ORP-3000UK		
Description	ASSY FRAME BASE		
		Page	(5 / 6)

Seq.	Part number.	Description	Qty	Sub Assy	Ord	Tool	S.T
***302	FD-60039UK	WH LED BRAKE LIGHT	1				

Title: FORD DX

sega work instructions

Name	Richard Ford
Date	08/05/2006
Rev.	1

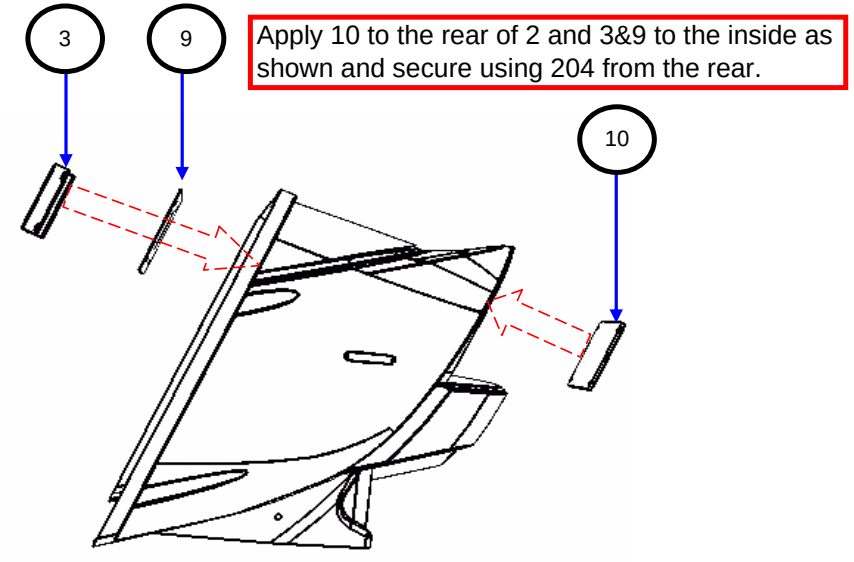

Apply 10 to the rear of 2 and 3&9 to the inside as shown and secure using 204 from the rear.

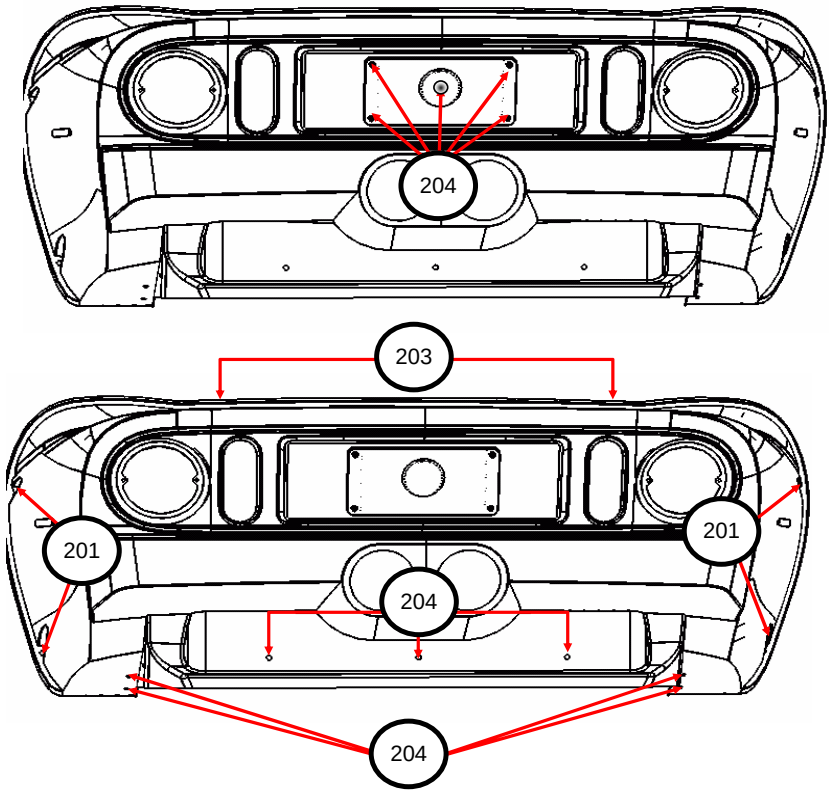

Apply 201,203&204 to the rear of 2 securing it to 1 as shown.

Tool List			
	T30	PHILLIPS NO2	

Top level No	4FD-0000UK	Level	2
Part number	ORP-3000UK		
Description	ASSY FRAME BASE		
		Page	(6 / 6)

Seq.	Part number.	Description	Qty	Sub Assy	Ord	Tool	S.T
***2	FD-2032UK	REAR FAIRING	1				
***3	FD-2353UK	BRKT SUPT NUM PL	1				
***9	FD-2367UK	SURROUND-NO-PL-FD-1	1				
***10		NUMBER PLATE	1				
***201	000-T00612-0C	M6X12 MSCR TH CRM	4				
***203	000-T00540-0C	M5X40 MSCR TH CRM	2				
***204	008-T00625-0C	M6X25 TMP PRF TH CRM	12				

Title: FORD DX

sega work instructions

Name	Richard Ford
Date	27/09/2005
Rev.	1

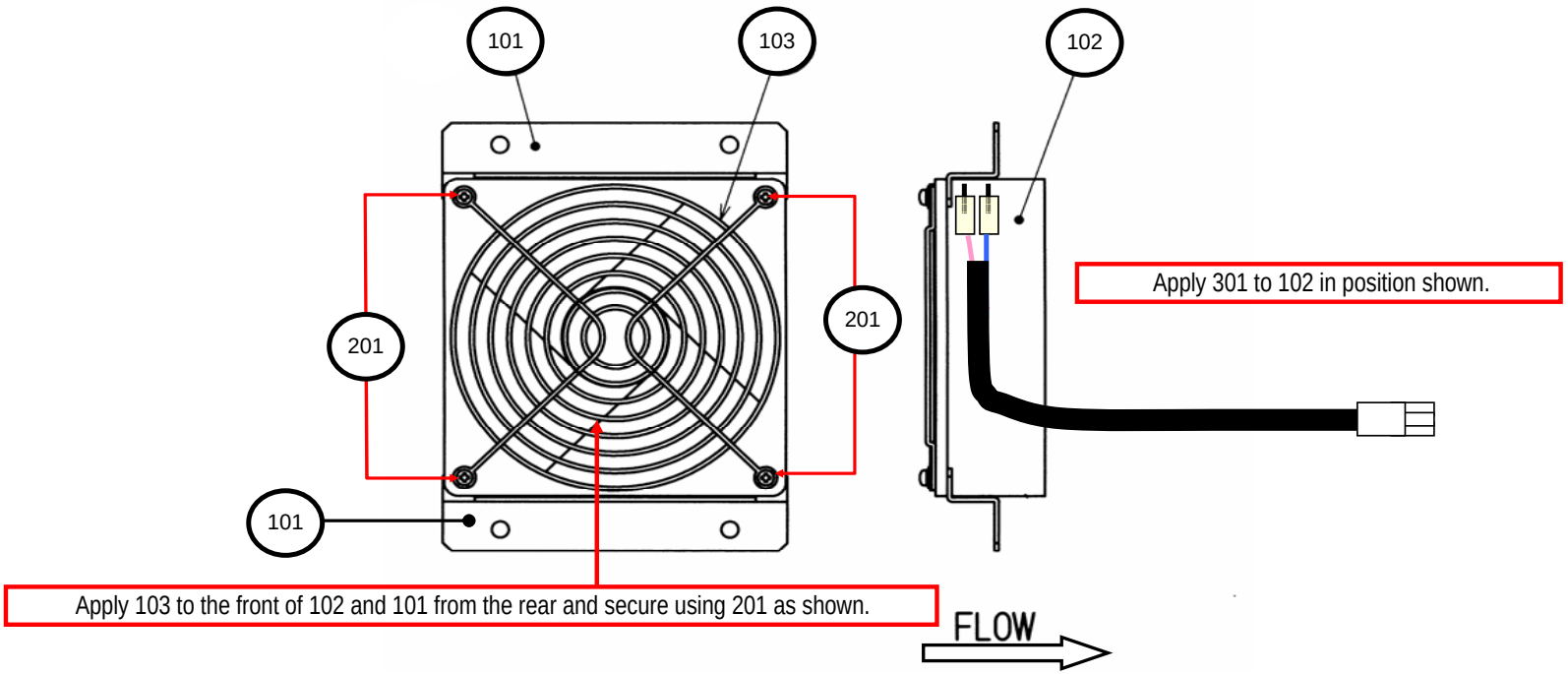

Tool List			
	PHILLIPS NO1		

Top level No	FD-0000UK	Level	4
Part number	FD-1530UK		
Description	ASSY FAN UNIT UK		
		Page	(1 / 1)

Seq.	Part number.	Description	Qty	Sub Assy	Ord	Tool	S.T
****101	105-5340-01	FAN BRKT LONG	2				
****102	260-0024-01UK	AXIAL FLOW FAN 240V 50-60HZ	1				
****103	FN1012	MESH GUARD METAL	1				
****201	000-P00312-W	M3X12 MSCR W/FS PAN PAS	4				
****301	FD-1530UK	ASSY FAN AC 240 UK	1				